NCL30000LED2GEVB

180-265 Vac up to 15 Watt Dimmable LED Driver Evaluation Board User's Manual

ON Semiconductor®

http://onsemi.com

EVAL BOARD USER'S MANUAL

Introduction

The NCL30000 is a power factor corrected LED driver controller. This evaluation board manual describes the setup and operation of the NCL30000LED2GEVB LED driver for 230 V input. The evaluation board implements an isolated single stage Critical conduction Mode (CrM) flyback converter providing a regulated constant current to an LED load. This board has been specifically configured to support leading and trailing edge line dimming and has been characterized across a range of commercially available dimmers. The output voltage range is suitable for nominal 4 to 15 high brightness power LEDs. Protection features include open load protection, over temperature protection, and overload limiting. As shipped, the evaluation board is set up for the following parameters:

Evaluation Board Specifications

- Input Voltage Range: 180 – 265 Vac
- Output Current: 350 mA ±5%
- Output Voltage Range: 12 – 50 Vdc
- Output Power: up to 17.5 W
- Full Load Efficiency: >82%
- Power Factor: >0.93 Typical
- 50°C Ambient Operation
- Class B Conducted Emissions
- Compatible with Triac and Electronic Dimmers

This manual also focuses on how the board can be modified to support alternate output currents and power levels. The NCL30000 datasheet contains additional information on operation of the controller and LED driver application. Application Note AND8451 details power stage design details and AND8448 provides specific information for dimming applications. Design calculations are covered in greater detail in these documents.

The compact evaluation board is constructed with through-hole components on the top and surface mount components on the bottom side. This board was designed to meet safety agency requirements but has not been evaluated for compliance. When operating this board, observe standard safe working practices. High voltages are present on the board and caution should be exercised when handling or probing various points to avoid personal injury or damage to the unit.

Figures 1 and 2 show the top and bottom sides of this evaluation board. AC input connects to the terminal block in the upper left corner. Terminals are marked "L" and "N" for Line and Neutral. The LED load connects to the terminal block in the upper right corner. Note the board is labeled "LED+" and "LED−". Observe polarity when connecting LED loads. **Never** connect LEDs to the driver while it is running or before the output capacitors discharge after removing input power. In open load conditions the output capacitors charge to >56 volts. Energy stored in the output capacitance can damage or shorten the effective life of the LEDs if improperly discharged into the LEDs.

© Semiconductor Components Industries, LLC, 2012



Figure 1. Top Side of Board



Figure 2. Bottom Side of Board

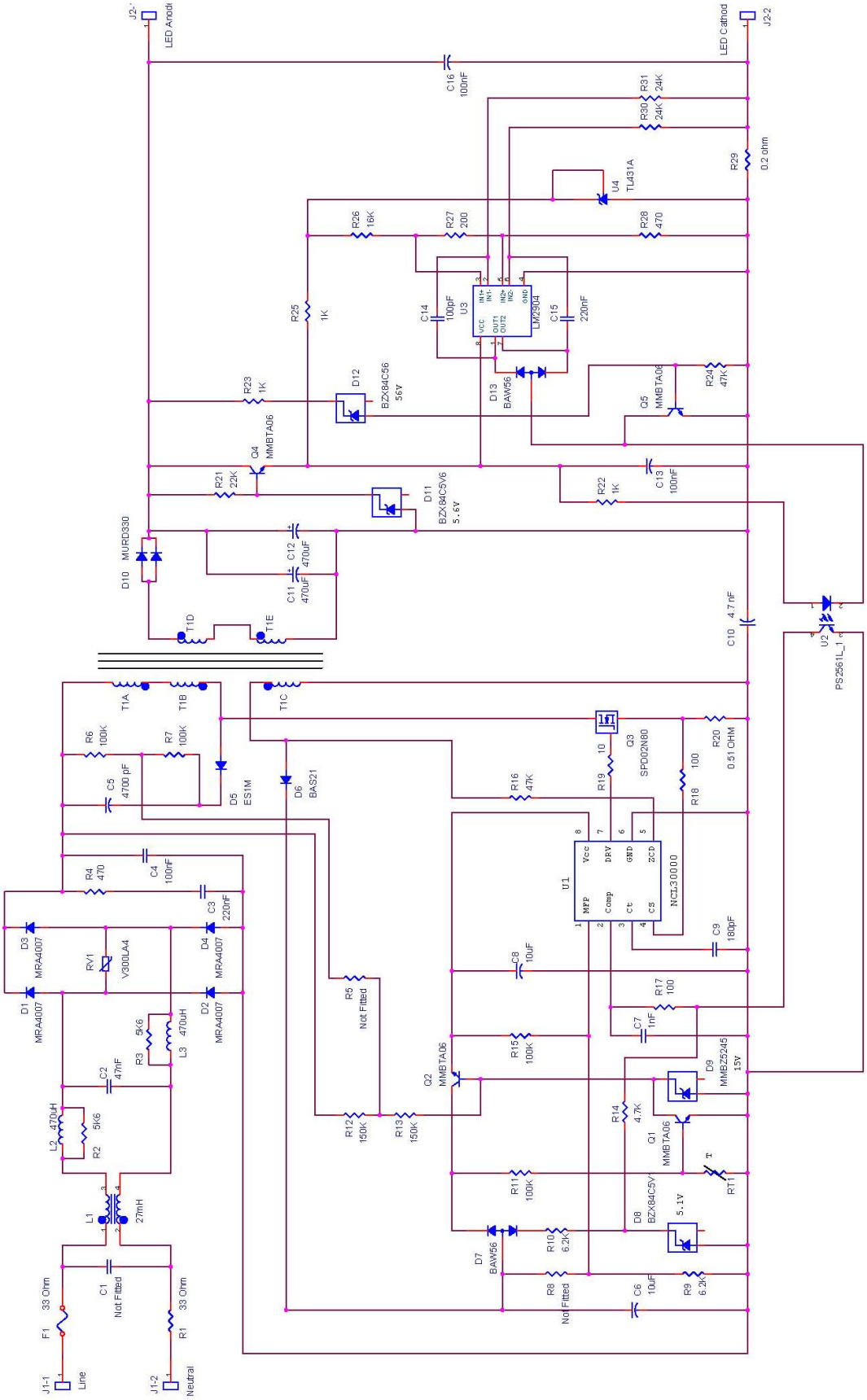

Figure 3. Board Schematic

Board Configuration

The evaluation board has been optimized for dimming with a 12 W load. Output current is regulated at 350 mA from 265 V rms down to a setpoint of about 200 V rms. When the input voltage is ~200 V rms, the control method changes from closed loop secondary side current control to primary side control. As the input voltage is reduced further the output current drops in a smooth fashion in response to the lower input voltage. This response matches the driver to a dimmer thus emulating the dimming response of an incandescent bulb. The following information details reconfiguring the evaluation board for alternate applications.

On-time Capacitor

The input voltage at which dimming or reduction of output current occurs is controlled by C9, power delivered to the LED load, and parameters from the evaluation board. The approximate value of C9 is calculated by the formula below:

$$C9 \approx \frac{4 \cdot L_{pri} \cdot P_{out} \cdot I_{charge}}{\eta' \cdot V^2_{pk} \cdot V_{Ctmax}} \cdot \left(\frac{V_{pk}}{N \cdot V_{out}} + 1 \right) \quad \text{(eq. 1)}$$

Values in the equation above are described in Table 1 below:

Table 1. VARIABLES FOR CALCULATING CT CAPACITOR

Variable	Description	Value for Evaluation Board
L_{pri}	Transformer Primary Inductance	0.00157
P_{out}	Power Output to LEDs	12
I_{charge}	Nominal On Time Capacitor Charge Current	275 μA
η'	Transformer/Secondary Efficiency	0.95
V_{pk}	Dimming Point Peak Voltage	200 Vrms = 282.8 Vpk
V_{ctmax}	Nominal On Time Capacitor Peak Voltage	4.93
N	Transformer Turns Ratio	3.83
V_{out}	LED Load Voltage (12 LEDs)	37

$$C9 \approx \frac{4 \cdot 0.00157 \cdot 12 \cdot 275\mu}{0.95 \cdot 282.8^2 \cdot 4.93} \cdot \left(\frac{282.8}{3.83 \cdot 37} + 1 \right) = 166 \text{ pF} \quad \text{(eq. 2)}$$

In practice, the value of capacitance calculated is an approximation of operating conditions and optimization is required. Empirical testing with a dimmer may be done to select the optimum input voltage for dimming to begin. A value of 180 pF was selected for C9 on the evaluation board to achieve desired results.

Modifying this evaluation board for alternate LED configurations and power levels is straight forward. Using the equation above, enter the target LED power, LED voltage, and the target AC input voltage below which dimming should occur. Select a capacitor somewhat below the value returned by the approximate formula. Performance should be evaluated using the desired dimmers. Check operation by noting the conduction angle below which LED current reduces. Increasing the value of capacitor C9 lowers the conduction angle where dimming occurs. Performance can be optimized by selecting the value of C9.

Figure 4 below is the bottom side of the evaluation board. Component locations are circled indicating those values that are most likely to be changed to optimize for a different power level.

Output Current Setup

A particular driver application may require LED current other than 350 mA. Output current is controlled by R29 located in Figure 4. The following formula is used to set the output current.

$$R29 = \frac{0.07}{I_{out}} \quad \text{(eq. 3)}$$

Dissipation for current sense resistor R29 is defined by the formula below.

$$P_{R29} = \frac{0.07^2}{R29} \quad \text{(eq. 4)}$$

The secondary windings of power transformer T1 are connected in series to support the 50 V/350 mA output rating of the evaluation board. Applications below 25 V or greater than 450 mA output should have the transformer secondary windings configured in parallel. This helps maintain proper primary bias voltage and enhances current carrying capability of the transformer. Table 2 shows how to configure the transformer flying leads in the PCB holes for series and parallel configuration. Figure 5 is the top side of the circuit board highlighting the wire holes H1 – H6.

Table 2. WINDING CONFIGURATION

Winding Configuration	H1	H2	H3	H4	H5	H6
Series (default)	FL1	<open>	FL2	FL3	<open>	FL4
Parallel	FL1	FL3	<open>	<open>	FL2	FL4

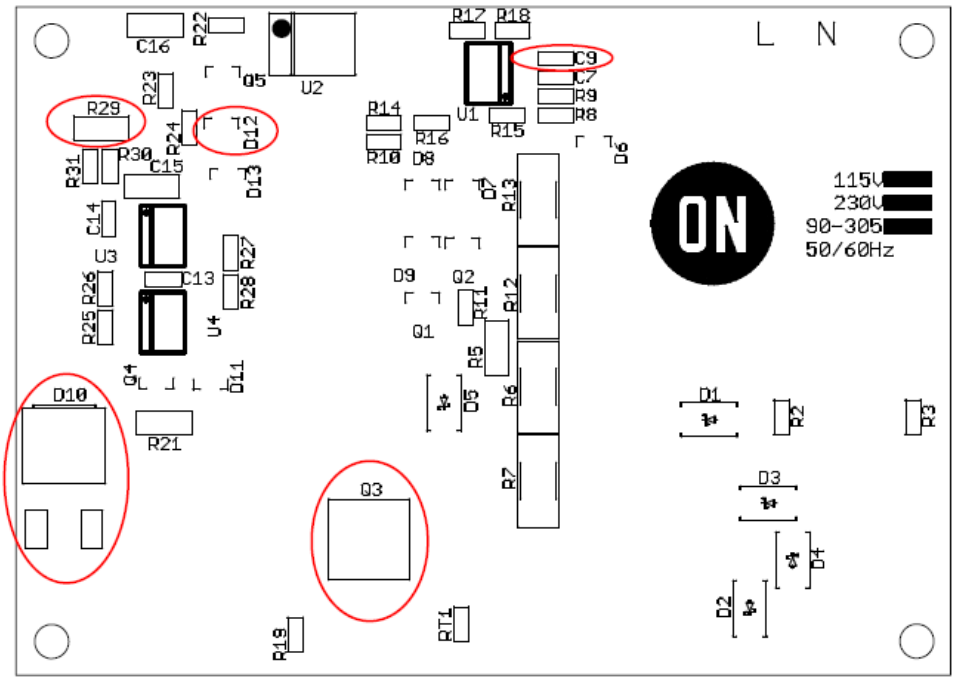

Figure 4. Bottom Side PCB Component Locations

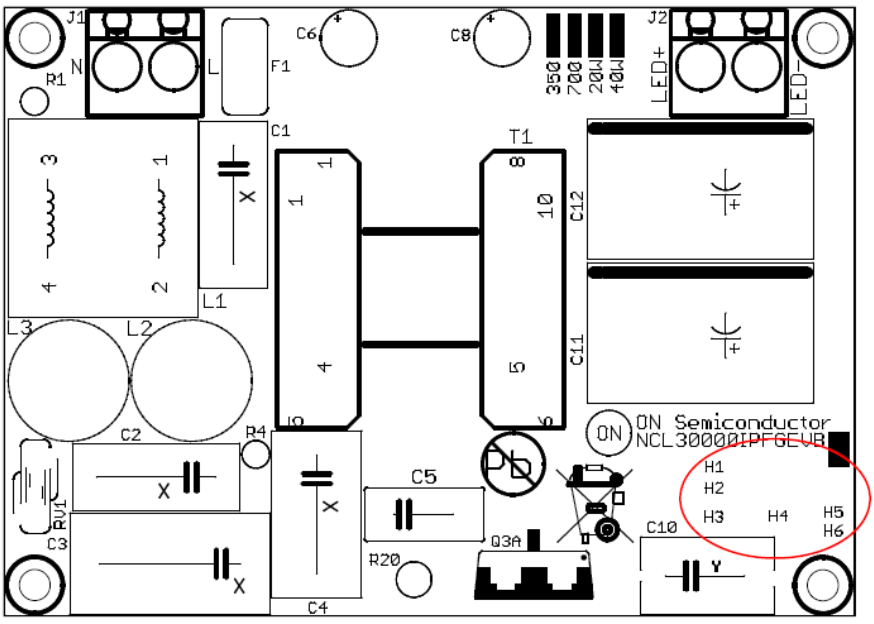

Figure 5. PCB Holes for Transformer Leads

As built, the evaluation board is suitable for 17.5 W maximum. The transformer secondary windings will support up to 1 A of LED current with secondary windings configured in parallel.

A 300 V output rectifier was selected for applications up to 50 Vdc output and 265 V ac input. Lower voltage rectifiers are recommended for applications below 50 Vdc. A lower forward voltage drop output rectifier will improve efficiency. Selecting a rectifier with a higher current rating typically provides lower forward drop at the currents of interest. A 3 A rectifier was selected for the evaluation board to provide low forward drop. Any change to the output rectifier requires verifying the maximum voltage rating is not exceeded.

Output Capacitor

The evaluation board regulates constant current and therefore the output voltage is determined by the LED load characteristics at the set current level. Energy storage to maintain high power factor and low output ripple current requires relatively large output filter capacitors. The LED load can be modeled as a constant voltage source with some series impedance. In essence, the ripple current in the LEDs is controlled by the series impedance coupling the constant voltage nature of the filter capacitance and constant voltage characteristic of the LEDs in a complex relationship.

Two 470 μF capacitors connected in parallel provide about 30% or 105 mA peak-to-peak ripple for a 350 mA average LED current. Increasing the output capacitance reduces the ripple current and conversely decreasing capacitance will increase the ripple. Applications requiring average output currents other than 350 mA can be scaled to this value. For example an application requiring 700 mA requires two 1,000 μF capacitors in parallel to provide 30% ripple.

Primary Current Limit

Maximum current in the switching FET Q3 is established by R20. The demo board components have been designed to support up to 17.5 W output at 180 V rms input. Note C9 has been preconfigured for 180 pF which limits the maximum power. If the application requires alternate power level or input voltage, the value of R20 can be adjusted. Lower power or high input line voltage applications my benefit from a higher value resistance which provides cycle-by-cycle current monitoring in the event of a fault. The formula below provides an estimated value for R20 which includes a 25% tolerance for components and start up conditions.

$$R20 = \frac{0.5}{1.25 \cdot I_{pri}} \quad \text{(eq. 5)}$$

Open Load Protection

The evaluation board includes a circuit to protect the output capacitors in the event of open load conditions. The output voltage will be limited when zener diode D12 exceeds the zener voltage plus ~0.7 V. D12 is presently 56 V which means the maximum output will be approximately 56.7 V. D12 can be changed to protect output capacitors of different voltage rating. Select D12 zener voltage to match open load requirements. The location of D12 is shown in Figure 4.

Typical Performance Data

Figure 6 below displays the relationship between input voltage and LED current for a 12 LED, 13 W load. Higher input voltages allow the secondary side control loop to regulate 350 mA output current at 37 V nominal load. Note the inflection point where reduction in current begins as the input voltage is reduced below 200 Vac. This is the dimming inception point.

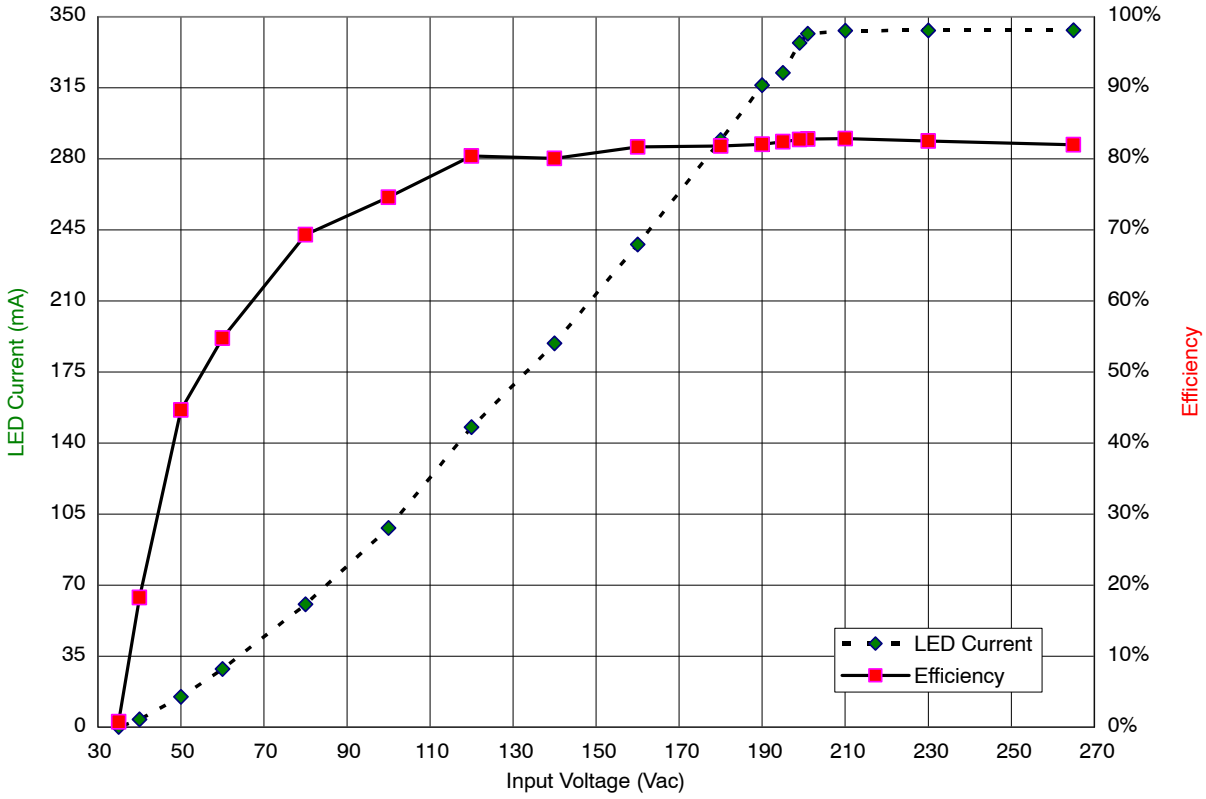

Figure 6. Line Regulation and Efficiency for 13 W Load

Efficiency performance is shown in Figure 6 as well. Note the efficiency remains above 70% until the output current drops below 70 mA. The output voltage is about 34 V meaning the delivered power is about 2.4 W or less than 20% of the full power. As the current delivered is reduced, the fixed losses for startup and biasing begin to dominate the efficiency curve resulting in a steep drop off of efficiency.

Harmonic content characterizes the waveshape of the input current waveform. Odd order harmonics of the fundamental distort the input waveform resulting in non-sinusoidal shape. International standard IEC 61000−3−2 Class C places limits on input current harmonics for lighting equipment. A category for devices drawing not more than 25 W applies to this reference design. Performance of this demonstration board with a 12 W LED load at 230 Vac, 50 Hz input and applicable limits are shown in Table 3.

Table 3. INPUT CURRENT HARMONIC CONTENT

Harmonic	Value	Limit
3	11.02%	86%
5	5.16%	61%

Power factor and input current Total Harmonic Distortion (THD) are performance factors receiving considerable attention from utility companies and government agencies. Figure 7 below displays performance of the evaluation board. The EMI filter was designed for a 17.5 W load. The filter can be optimized for higher power factor in applications requiring less power.

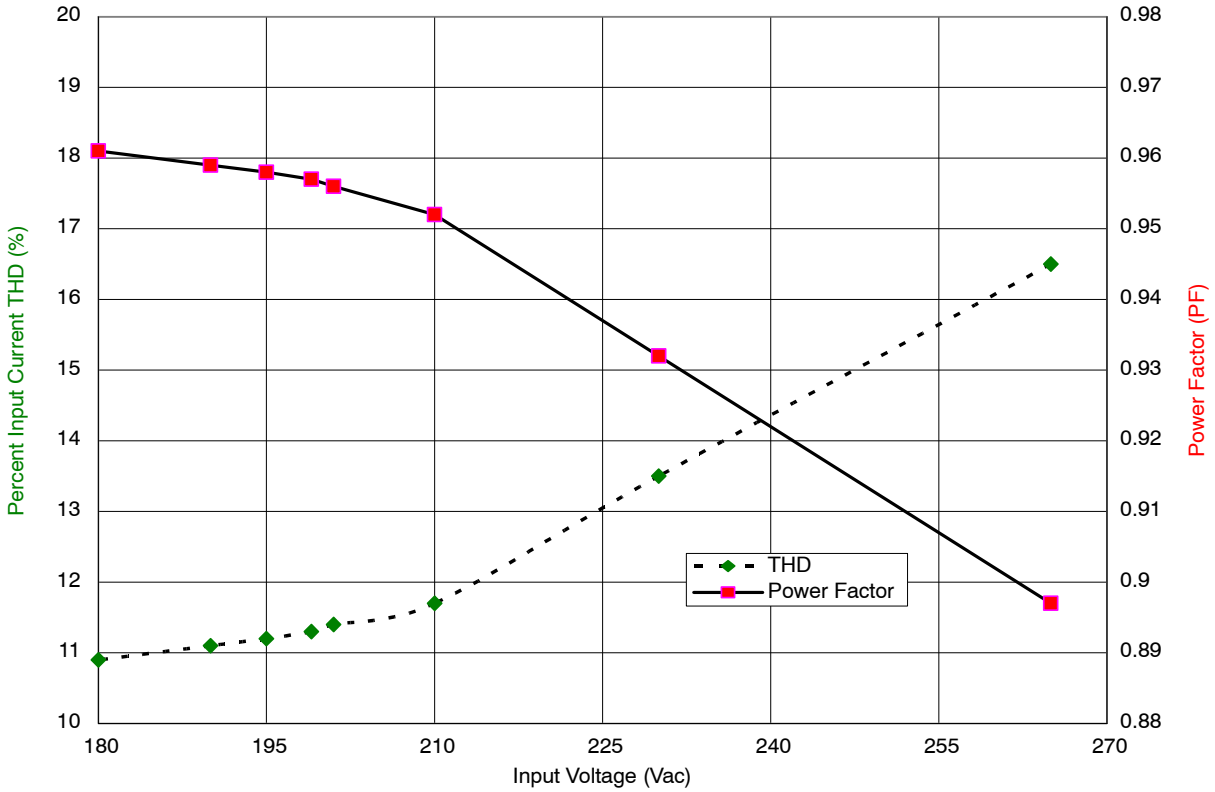

Figure 7. Power Factor and THD

The evaluation board was tested with a variety of commercial dimmers. Figure 8 shows the dimming performance with several triac and electronic dimmers. Dimming control range varies by manufacturer, but a range of greater than 10:1 was consistently demonstrated. Note that minimum conduction angle and therefore LED current is controlled by the design of the triac or electronic dimmer selected.

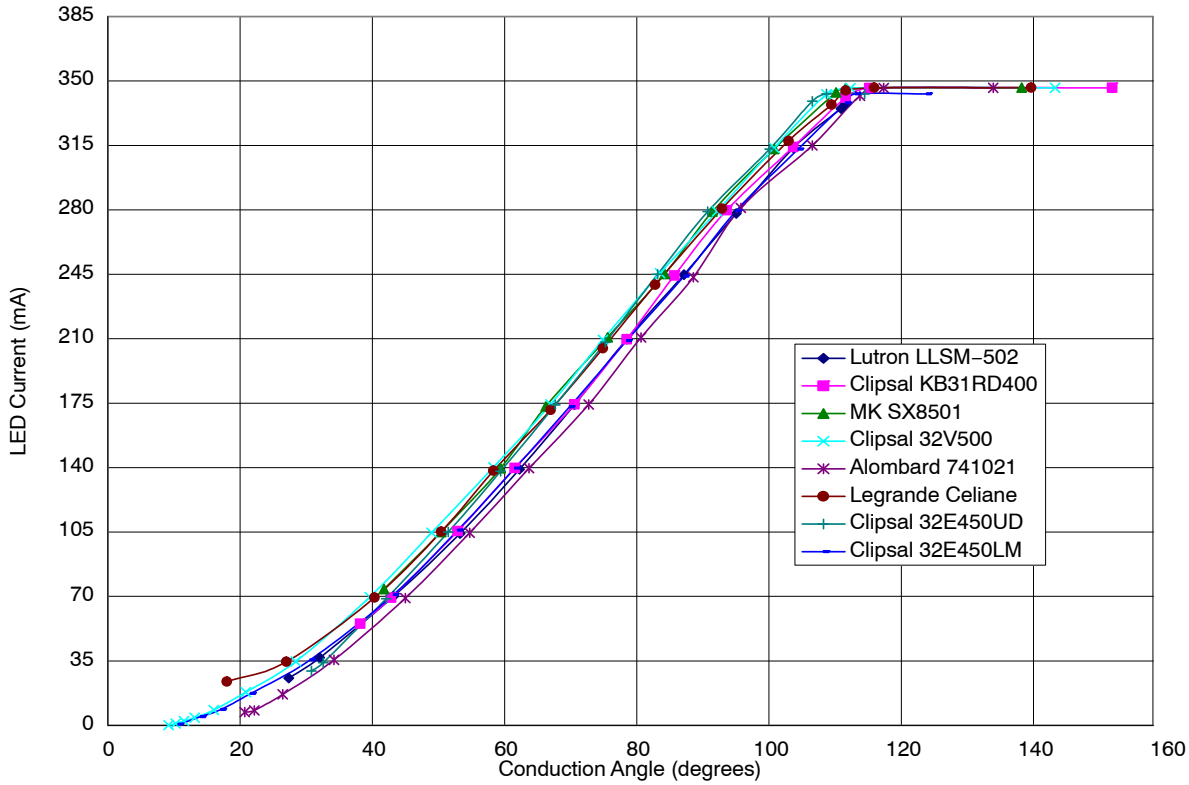

Figure 8. Performance of Evaluation Board with Various Line Dimmers

Table 4 lists commercial dimmers successfully tested with the evaluation board. The load is 12 LEDs (Vf = 37 Vdc) and nominal current is set for 350 mA.

Table 4. DIMMER COMPATIBILITY CHART

Manufacturer	Dimmer Model	Minimum Conduction Angle (degrees)	Current at Minimum Conduction Angle (mA)
Alombard	741021	20.7	7.2
Clipsal	KB31RD400	38.2	55.2
Clipsal	32E450LM	10.6	1
Clipsal	32E450UD	30.8	29.5
Clipsal	32V500	9.2	0
Legrande	999.58	18	23.8
Lutron	LLSM−502	27.4	25.7
MK	SX8501	41.8	74

Conclusion

The NCL30000LED2GEVB is a versatile dimmer-compatible LED driver. This board provides rapid assessment of capabilities and serves as a basis for LED driver solutions. Smooth flicker-free dimming performance is demonstrated with a wide variety of commercially available dimmers. Full 350 mA LED current is provided at maximum dimmer setting. High power factor and high efficiency provide a cost effective solution for a dimmer compatible LED driver.

Additional Application Information and Tools

The NCL30000LED2GEVB evaluation board, NCL30000 datasheet, AND8451 Power Stage Design Guidelines, Microsoft® Excel® Design Spreadsheet, and AND8448 TRIAC Dimming application note are available at www.onsemi.com.

c

Microsoft and Excel are registered trademarks of Microsoft Corporation.

ON Semiconductor and the ON Semiconductor logo are trademarks of Semiconductor Components Industries, LLC dba ON Semiconductor or its subsidiaries in the United States and/or other countries. ON Semiconductor owns the rights to a number of patents, trademarks, copyrights, trade secrets, and other intellectual property. A listing of ON Semiconductor's product/patent coverage may be accessed at www.onsemi.com/site/pdf/Patent−Marking.pdf. ON Semiconductor is an Equal Opportunity/Affirmative Action Employer. This literature is subject to all applicable copyright laws and is not for resale in any manner.

The evaluation board/kit (research and development board/kit) (hereinafter the "board") is not a finished product and is as such not available for sale to consumers. The board is only intended for research, development, demonstration and evaluation purposes and should as such only be used in laboratory/development areas by persons with an engineering/technical training and familiar with the risks associated with handling electrical/mechanical components, systems and subsystems. This person assumes full responsibility/liability for proper and safe handling. Any other use, resale or redistribution for any other purpose is strictly prohibited.

The board is delivered "AS IS" and without warranty of any kind including, but not limited to, that the board is production−worthy, that the functions contained in the board will meet your requirements, or that the operation of the board will be uninterrupted or error free. ON Semiconductor expressly disclaims all warranties, express, implied or otherwise, including without limitation, warranties of fitness for a particular purpose and non−infringement of intellectual property rights.

ON Semiconductor reserves the right to make changes without further notice to any board.

You are responsible for determining whether the board will be suitable for your intended use or application or will achieve your intended results. Prior to using or distributing any systems that have been evaluated, designed or tested using the board, you agree to test and validate your design to confirm the functionality for your application. Any technical, applications or design information or advice, quality characterization, reliability data or other services provided by ON Semiconductor shall not constitute any representation or warranty by ON Semiconductor, and no additional obligations or liabilities shall arise from ON Semiconductor having provided such information or services.

The boards are not designed, intended, or authorized for use in life support systems, or any FDA Class 3 medical devices or medical devices with a similar or equivalent classification in a foreign jurisdiction, or any devices intended for implantation in the human body. Should you purchase or use the board for any such unintended or unauthorized application, you shall indemnify and hold ON Semiconductor and its officers, employees, subsidiaries, affiliates, and distributors harmless against all claims, costs, damages, and expenses, and reasonable attorney fees arising out of, directly or indirectly, any claim of personal injury or death associated with such unintended or unauthorized use, even if such claim alleges that ON Semiconductor was negligent regarding the design or manufacture of the board.

This evaluation board/kit does not fall within the scope of the European Union directives regarding electromagnetic compatibility, restricted substances (RoHS), recycling (WEEE), FCC, CE or UL, and may not meet the technical requirements of these or other related directives.

FCC WARNING − This evaluation board/kit is intended for use for engineering development, demonstration, or evaluation purposes only and is not considered by ON Semiconductor to be a finished end product fit for general consumer use. It may generate, use, or radiate radio frequency energy and has not been tested for compliance with the limits of computing devices pursuant to part 15 of FCC rules, which are designed to provide reasonable protection against radio frequency interference. Operation of this equipment may cause interference with radio communications, in which case the user shall be responsible, at its expense, to take whatever measures may be required to correct this interference.

ON Semiconductor does not convey any license under its patent rights nor the rights of others.

LIMITATIONS OF LIABILITY: ON Semiconductor shall not be liable for any special, consequential, incidental, indirect or punitive damages, including, but not limited to the costs of requalification, delay, loss of profits or goodwill, arising out of or in connection with the board, even if ON Semiconductor is advised of the possibility of such damages. In no event shall ON Semiconductor's aggregate liability from any obligation arising out of or in connection with the board, under any theory of liability, exceed the purchase price paid for the board, if any.

For more information and documentation, please visit www.onsemi.com.

PUBLICATION ORDERING INFORMATION

LITERATURE FULFILLMENT:
Email Requests to: orderlit@onsemi.com

ON Semiconductor Website: www.onsemi.com

TECHNICAL SUPPORT
North American Technical Support:
Voice Mail: 1 800−282−9855 Toll Free USA/Canada
Phone: 011 421 33 790 2910

Europe, Middle East and Africa Technical Support:
Phone: 00421 33 790 2910
For additional information, please contact your local Sales Representative

◊