N-Channel Super Junction Power MOSFET Ⅱ

General Description

The series of devices use advanced super junction technology and design to provide excellent $R_{DS(ON)}$ with low gate charge. This super junction MOSFET fits the industry's AC-DC SMPS requirements for PFC, AC/DC power conversion, and industrial power applications.

Features

- New technology for high voltage device
- Low on-resistance and low conduction losses
- Small package
- Ultra Low Gate Charge cause lower driving requirements
- 100% Avalanche Tested
- ROHS compliant

Application

- Power factor correction（PFC）
- Switched mode power supplies(SMPS)
- Uninterruptible Power Supply（UPS）

$V_{DS}@T_{jmax}$	650	V
$R_{DS(ON)}$ TYP	1.85	Ω
I_D	2	A

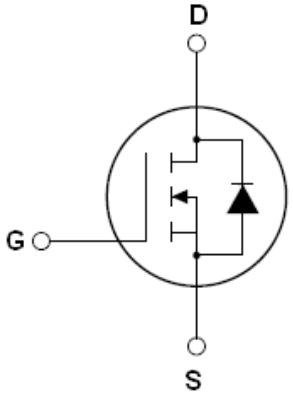

Schematic diagram

Package Marking And Ordering Information

Device	Device Package	Marking
NCE60R2K2I	TO-251	NCE60R2K2I
NCE60R2K2K	TO-252	NCE60R2K2K

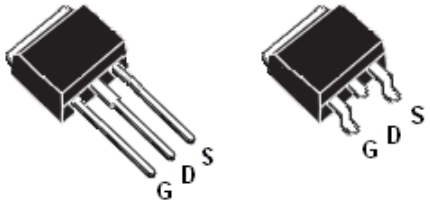

TO-251 **TO-252**

Table 1. Absolute Maximum Ratings (T_C=25℃)

Parameter	Symbol	Value	Unit
Drain-Source Voltage (V_{GS}=0V）	V_{DS}	600	V
Gate-Source Voltage (V_{DS}=0V)	V_{GS}	±30	V
Continuous Drain Current at Tc=25°C	$I_{D\ (DC)}$	2	A
Continuous Drain Current at Tc=100°C	$I_{D\ (DC)}$	1.3	A
Pulsed drain current **(Note 1)**	$I_{DM\ (pluse)}$	6	A
Maximum Power Dissipation(Tc=25℃) Derate above 25°C	P_D	23 0.184	W W/°C
Single pulse avalanche energy **(Note2)**	E_{AS}	45	mJ
Avalanche current **(Note 1)**	I_{AR}	1	A
Repetitive Avalanche energy ， t_{AR} limited by T_{jmax} **(Note 1)**	E_{AR}	0.06	mJ

Parameter	Symbol	Value	Unit
Drain Source voltage slope, V_{DS} ≤480 V,	dv/dt	50	V/ns
Reverse diode dv/dt， V_{DS} ≤480 V,I_{SD}<I_D	dv/dt	15	V/ns
Operating Junction and Storage Temperature Range	T_J,T_{STG}	-55...+150	°C

Table 2. Thermal Characteristic

Parameter	Symbol	Value	Unit
Thermal Resistance，Junction-to-Case（Maximum）	R_{thJC}	5.4	°C /W
Thermal Resistance，Junction-to-Ambient （Maximum）	R_{thJA}	75	°C /W

Table 3. Electrical Characteristics (TA=25℃unless otherwise noted)

Parameter	Symbol	Condition	Min	Typ	Max	Unit
On/off states						
Drain-Source Breakdown Voltage	BV_{DSS}	V_{GS}=0V I_D=250μA	600			V
Zero Gate Voltage Drain Current(Tc=25℃)	I_{DSS}	V_{DS}=600V,V_{GS}=0V			1	μA
Zero Gate Voltage Drain Current(Tc=125℃)	I_{DSS}	V_{DS}=600V,V_{GS}=0V			10	μA
Gate-Body Leakage Current	I_{GSS}	V_{GS}=±30V,V_{DS}=0V			±100	nA
Gate Threshold Voltage	$V_{GS(th)}$	V_{DS}=V_{GS},I_D=250μA	2.5	3	3.5	V
Drain-Source On-State Resistance	$R_{DS(ON)}$	V_{GS}=10V, I_D=1A		1850	2200	mΩ
Dynamic Characteristics						
Forward Transconductance	g_{FS}	V_{DS} = 20V, I_D = 1A		2		S
Input Capacitance	C_{lss}	V_{DS}=50V,V_{GS}=0V, F=1.0MHz		190		PF
Output Capacitance	C_{oss}			13		PF
Reverse Transfer Capacitance	C_{rss}			1.1		PF
Total Gate Charge	Q_g	V_{DS}=480V,I_D=2A, V_{GS}=10V		3.2	10	nC
Gate-Source Charge	Q_{gs}			0.6		nC
Gate-Drain Charge	Q_{gd}			1.2		nC
Intrinsic gate resistance	R_G	f = 1 MHz open drain		9		Ω
Switching times						
Turn-on Delay Time	$t_{d(on)}$	V_{DD}=380V,I_D=1A, R_G=50Ω,V_{GS}=10V		6		nS
Turn-on Rise Time	t_r			3		nS
Turn-Off Delay Time	$t_{d(off)}$			65		nS
Turn-Off Fall Time	t_f			11		nS
Source- Drain Diode Characteristics						
Source-drain current(Body Diode)	I_{SD}	T_C=25°C			2	A
Pulsed Source-drain current(Body Diode)	I_{SDM}				6	A
Forward On Voltage	V_{SD}	Tj=25°C,I_{SD}=2A,V_{GS}=0V		1	1.3	V
Reverse Recovery Time	t_{rr}	Tj=25°C,I_F=2A,di/dt=100A/μs		140		nS
Reverse Recovery Charge	Q_{rr}			0.65		uC
Peak reverse recovery current	I_{rrm}			9		A

Notes: 1.Repetitive Rating: Pulse width limited by maximum junction temperature

2. Tj=25℃,VDD=50V,VG=10V, R_G=25Ω

TYPICAL ELECTRICAL AND THERMAL CHARACTERISTICS (curves)

Figure1. Safe operating area

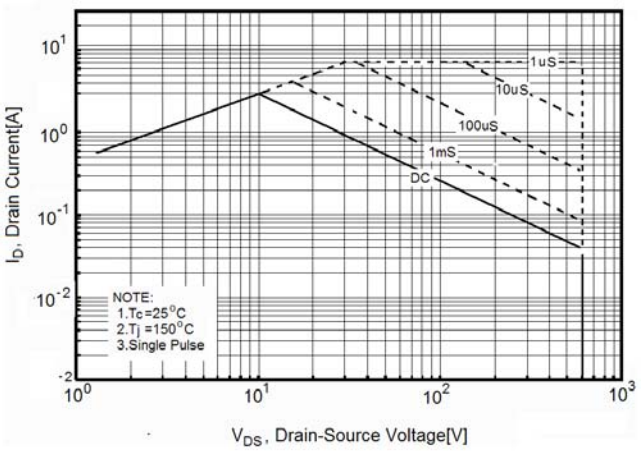

Figure2. Source-Drain Diode Forward Voltage

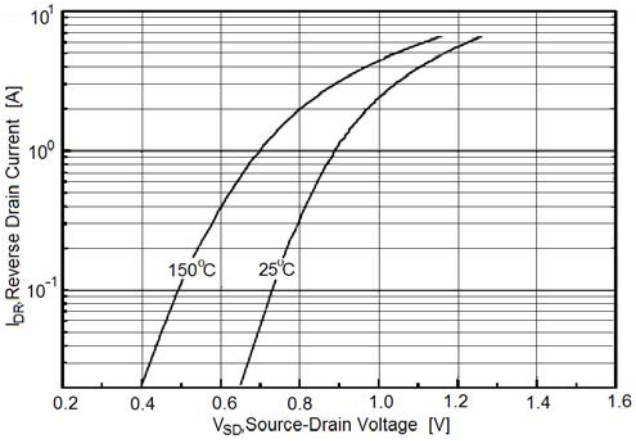

Figure3. Output characteristics

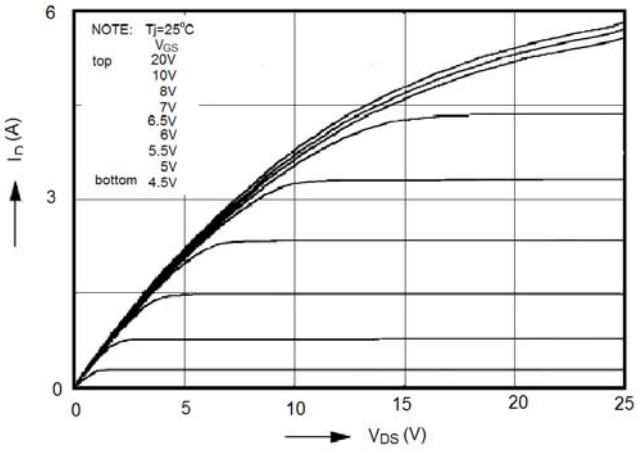

Figure4. Transfer characteristics

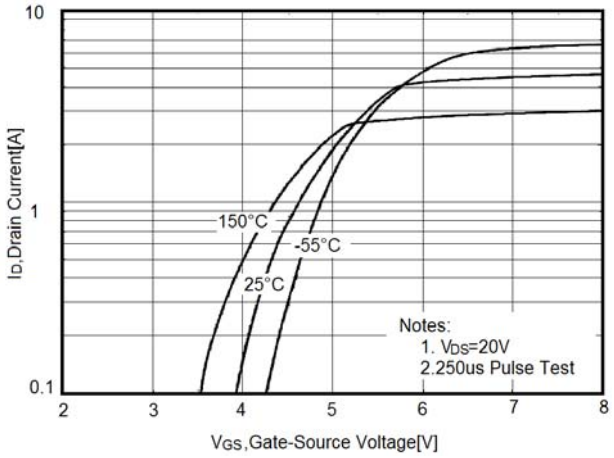

Figure5. Static drain-source on resistance

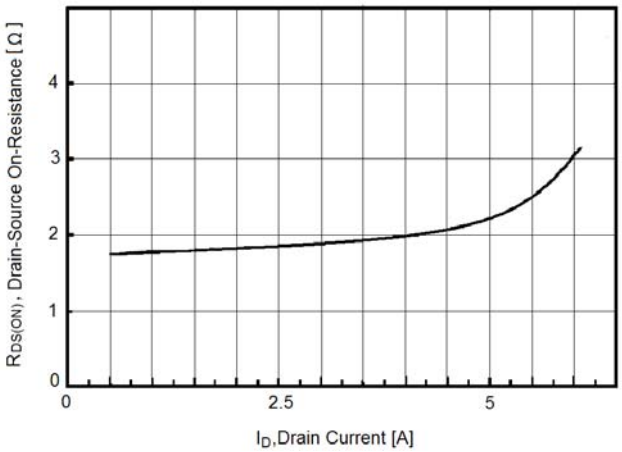

Figure6. $R_{DS(ON)}$ vs Junction Temperature

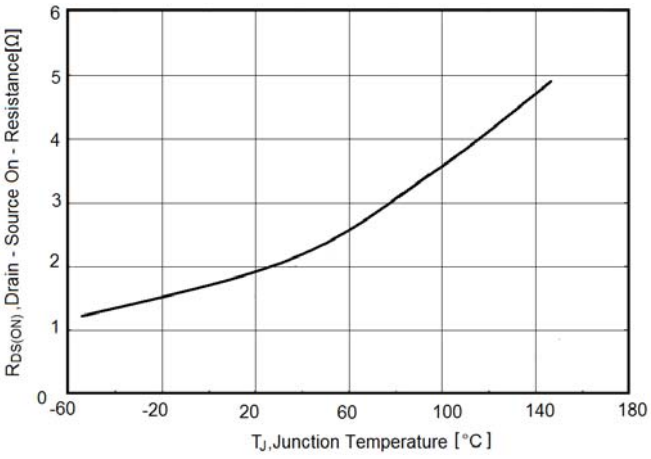

Figure7. BV_{DSS} vs Junction Temperature

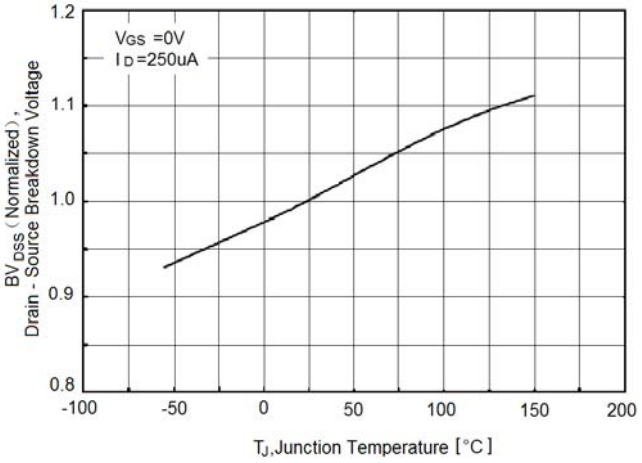

Figure8. Maximum I_D vs Junction Temperature

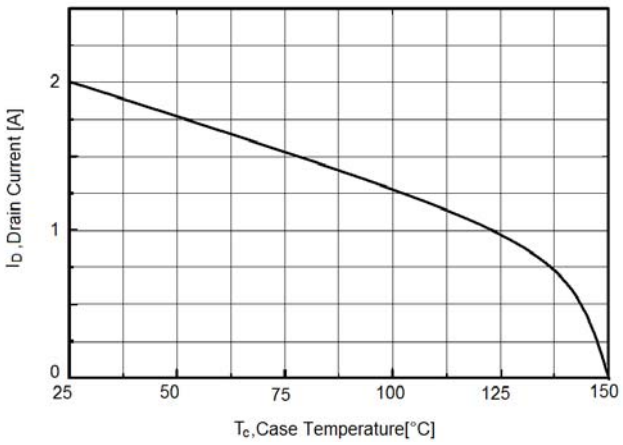

Figure9. Gate charge waveforms

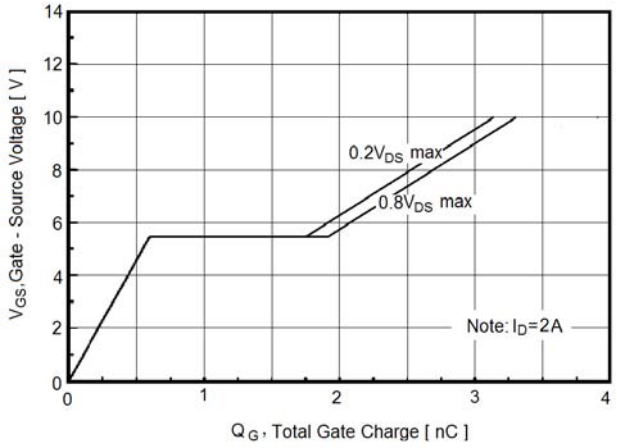

Figure10. Capacitance

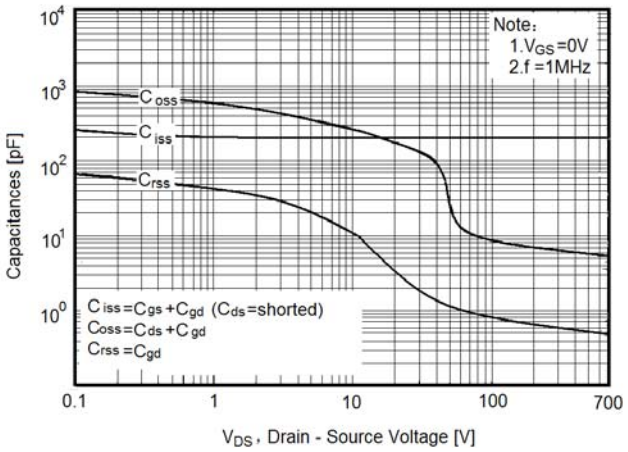

Figure11. Transient Thermal Impedance

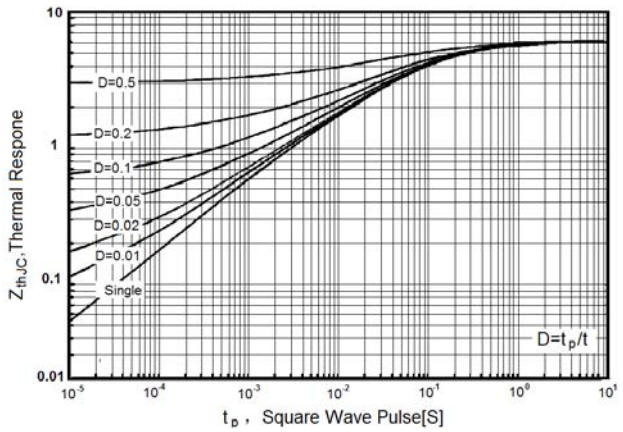

Test circuit

1）Gate charge test circuit & Waveform

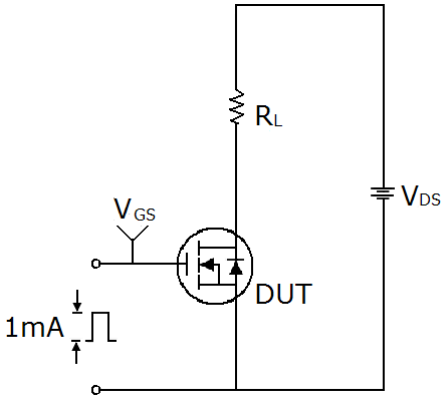

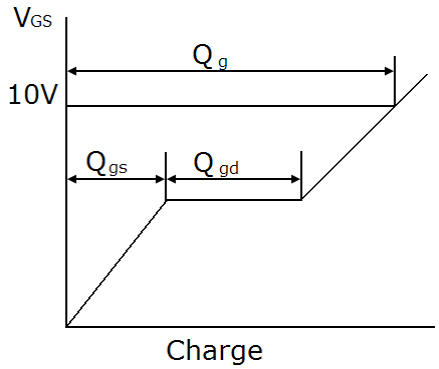

2）Switch Time Test Circuit：

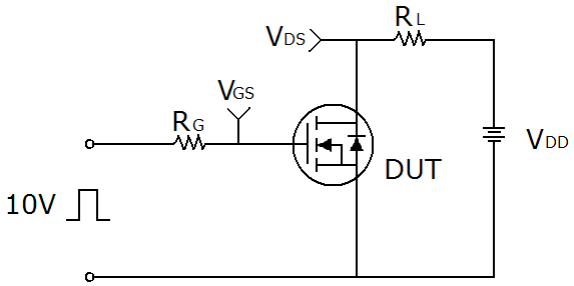

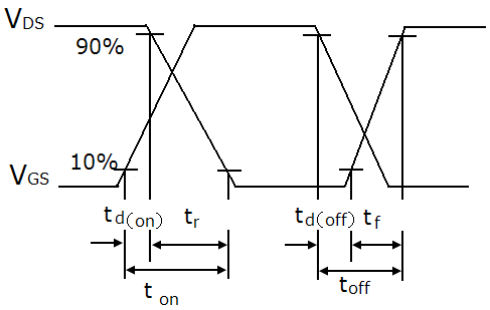

3）Unclamped Inductive Switching Test Circuit & Waveforms

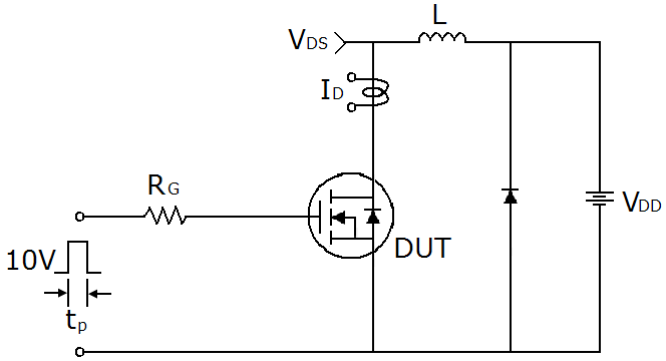

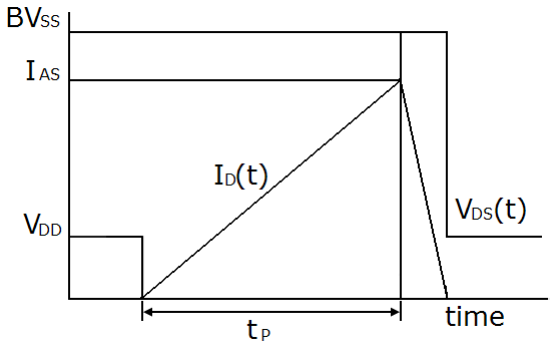

TO-251 Package Information

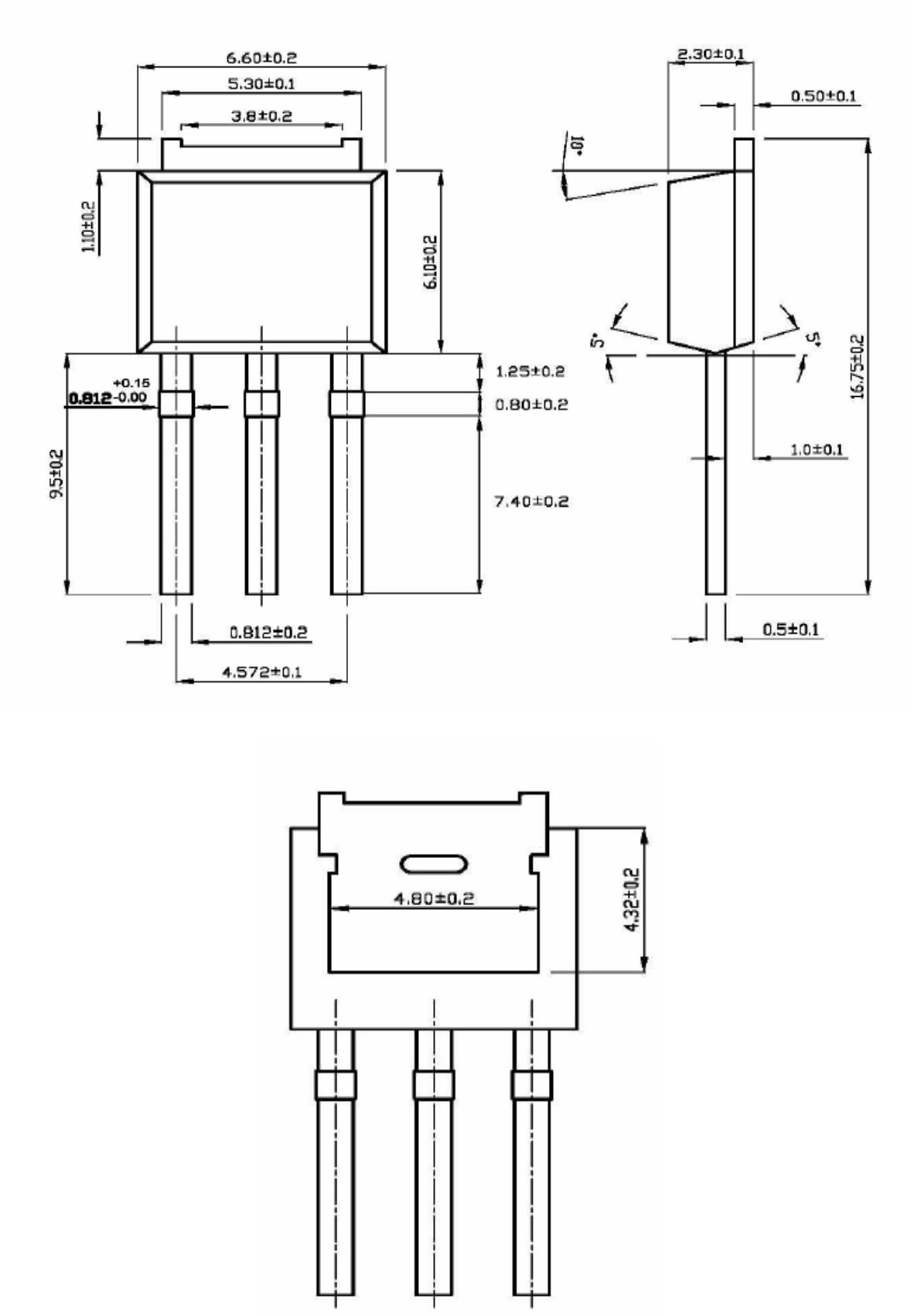

TO-252 Package Information

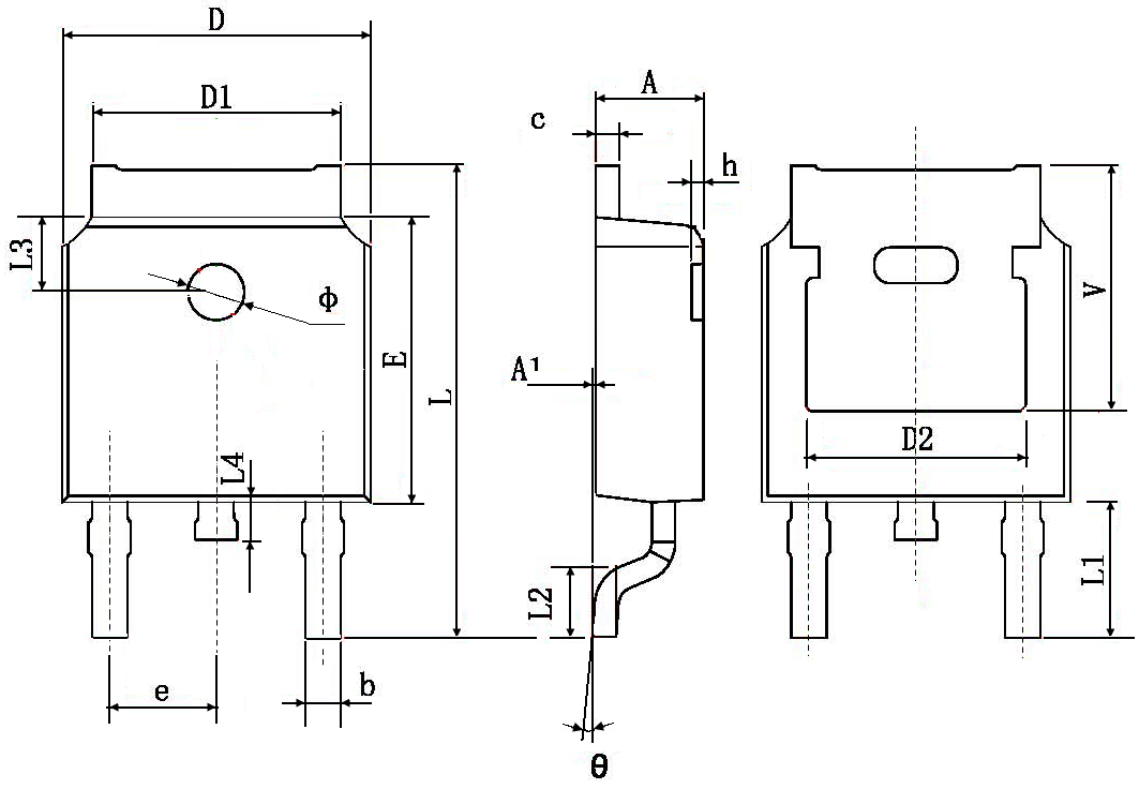

Symbol	Dimensions In Millimeters		Dimensions In Inches	
	Min.	Max.	Min.	Max.
A	2.200	2.400	0.087	0.094
A1	0.000	0.127	0.000	0.005
b	0.660	0.860	0.026	0.034
c	0.460	0.580	0.018	0.023
D	6.500	6.700	0.256	0.264
D1	5.100	5.460	0.201	0.215
D2	0.483 TYP.		0.190 TYP.	
E	6.000	6.200	0.236	0.244
e	2.186	2.386	0.086	0.094
L	9.800	10.400	0.386	0.409
L1	2.900 TYP.		0.114 TYP.	
L2	1.400	1.700	0.055	0.067
L3	1.600 TYP.		0.063 TYP.	
L4	0.600	1.000	0.024	0.039
Φ	1.100	1.300	0.043	0.051
θ	0°	8°	0°	8°
h	0.000	0.300	0.000	0.012
V	5.350 TYP.		0.211 TYP.	

ATTENTION:

- Any and all NCE products described or contained herein do not have specifications that can handle applications that require extremely high levels of reliability, such as life-support systems, aircraft's control systems, or other applications whose failure can be reasonably expected to result in serious physical and/or material damage. Consult with your NCE representative nearest you before using any NCE products described or contained herein in such applications.
- NCE assumes no responsibility for equipment failures that result from using products at values that exceed, even momentarily, rated values (such as maximum ratings, operating condition ranges, or other parameters) listed in products specifications of any and all NCE products described or contained herein.
- Specifications of any and all NCE products described or contained herein stipulate the performance, characteristics, and functions of the described products in the independent state, and are not guarantees of the performance, characteristics, and functions of the described products as mounted in the customer's products or equipment. To verify symptoms and states that cannot be evaluated in an independent device, the customer should always evaluate and test devices mounted in the customer's products or equipment.
- NCE Power Semiconductor CO.,LTD. strives to supply high-quality high-reliability products. However, any and all semiconductor products fail with some probability. It is possible that these probabilistic failures could give rise to accidents or events that could endanger human lives, that could give rise to smoke or fire, or that could cause damage to other property. When designing equipment, adopt safety measures so that these kinds of accidents or events cannot occur. Such measures include but are not limited to protective circuits and error prevention circuits for safe design, redundant design, and structural design.
- In the event that any or all NCE products(including technical data, services) described or contained herein are controlled under any of applicable local export control laws and regulations, such products must not be exported without obtaining the export license from the authorities concerned in accordance with the above law.
- No part of this publication may be reproduced or transmitted in any form or by any means, electronic or mechanical, including photocopying and recording, or any information storage or retrieval system, or otherwise, without the prior written permission of NCE Power Semiconductor CO.,LTD.
- Information (including circuit diagrams and circuit parameters) herein is for example only ; it is not guaranteed for volume production. NCE believes information herein is accurate and reliable, but no guarantees are made or implied regarding its use or any infringements of intellectual property rights or other rights of third parties.
- Any and all information described or contained herein are subject to change without notice due to product/technology improvement, etc. When designing equipment, refer to the "Delivery Specification" for the NCE product that you intend to use.
- This catalog provides information as of Mar. 2010. Specifications and information herein are subject to change without notice.