NB6L56

2.5V / 3.3V Dual 2:1 Differential Clock / Data Multiplexer with LVPECL Outputs

Multi−Level Inputs w/ Internal Termination

The NB6L56 is a high performance Dual 2−to−1 Differential Clock or Data multiplexer. The differential inputs incorporate internal 50 Ω termination resistors that are accessed through the VT pin. This feature allows the NB6L56 to accept various Differential logic level standards, such as LVPECL, CML or LVDS. Outputs are 800 mV LVPECL signals. For interface options see Figures 12 − 15.

The NB6L56 produces minimal Clock or Data jitter operating up to 2.5 GHz or 2.5 Gbps, respectively. As such, the NB6L56 is ideal for SONET, GigE, Fiber Channel, Backplane and other Clock/Data distribution applications.

The NB6L56 is offered in a low profile 5 mm x 5 mm 32−pin QFN package and is a member of the ECLinPS MAX™ family of high performance Clock / Data products. Application notes, models, and support documentation are available at www.onsemi.com.

Features

- Maximum Input Data Rate > 2.5 Gbps
- Maximum Input Clock Frequency > 2.5 GHz
- Jitter
  < 1 ps RMS RJ (Data)
  < 10 ps PP DJ (Data)
  < 0.7 ps RMS Crosstalk induced jitter (CLOCK)
- 360 ps Max Propagation Delay
- 180 ps Max Rise and Fall Times
- Operating Range:
  V_{CC} = 2.5 ± 5% (2.375 V to 2.625 V)
  V_{CC} =3.3 ± 10% (3.0 V to 3.6 V)
- Internal 50 Ω Input Termination Resistors
- Industrial Temp. Range (−40°C to 85°C)
- QFN−32 Package
- These are Pb−Free Devices

Applications

- Clock and Data Distribution
- Networking and Communications
- High End Computing
- Wireless and Wired Infrastructure

End Products

- Servers
- Ethernet Switch/Routers
- ATE
- Test and Measurement

ON Semiconductor®

http://onsemi.com

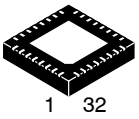

QFN32
MN SUFFIX
CASE 488AM

MARKING DIAGRAM*

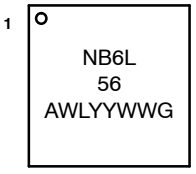

A	= Assembly Location
WL	= Wafer Lot
YY	= Year
WW	= Work Week
G	= Pb−Free Package

*For additional marking information, refer to Application Note AND8002/D.

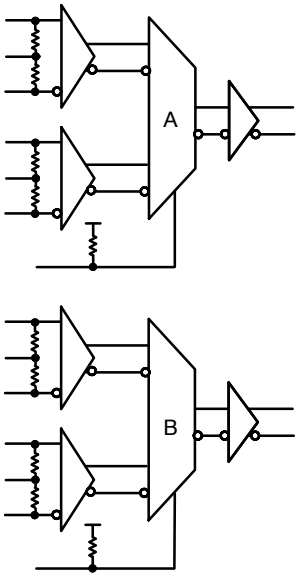

Figure 1. Simplified Logic Diagram

ORDERING INFORMATION

See detailed ordering and shipping information in the package dimensions section on page 9 of this data sheet.

© Semiconductor Components Industries, LLC, 2012

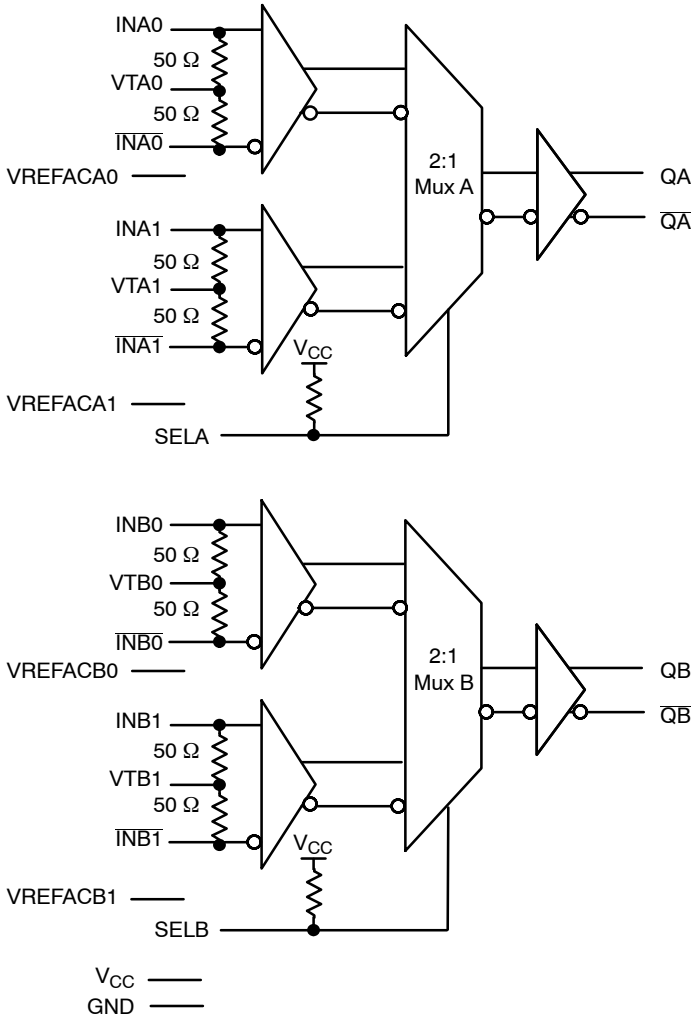

Figure 2. Pin Configuration (Top View)

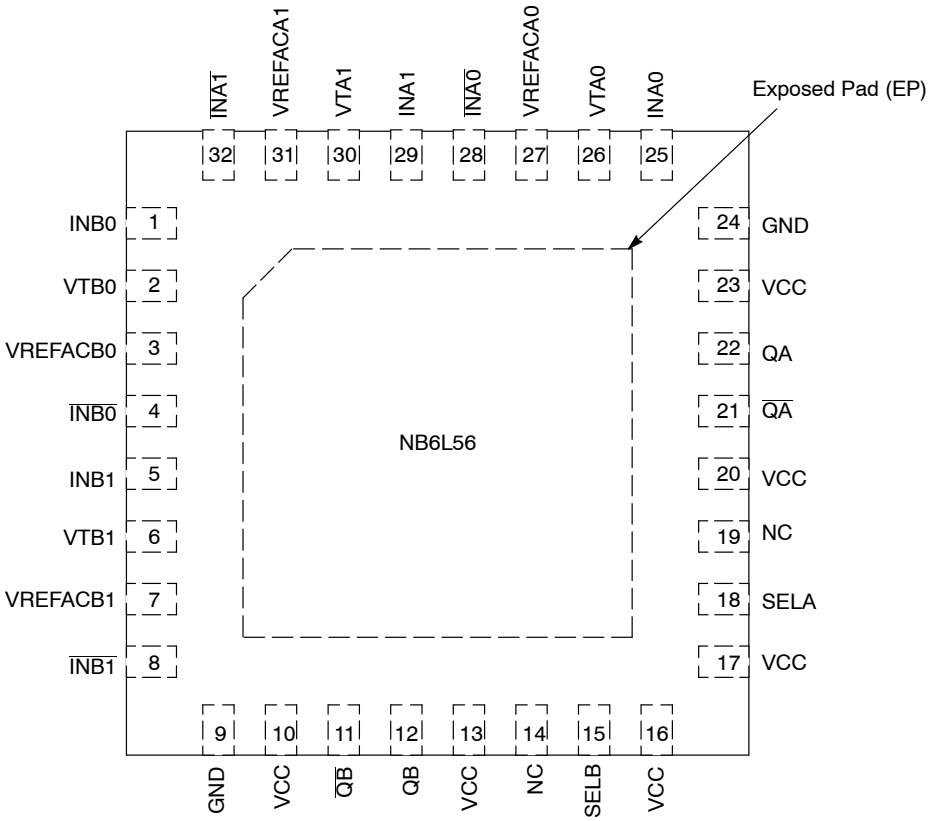

Figure 3. NB6L56 Pinout: QFN−32 (Top View)

Table 1. PIN DESCRIPTION

Pin	Name	I/O	Pin Description
1, 4 5, 8 25, 28 29, 32	INB0, $\overline{\text{INB0}}$ INB1, $\overline{\text{INB1}}$ INA0, $\overline{\text{INA0}}$ INA1, $\overline{\text{INA1}}$	LVPECL, CML, LVDS Input	Noninverted, Inverted Differential Input pairs (Note 1). Default state is indeterminate if left floating open. Do not connect unused input pairs with one input connected to VCC and the complementary input to GND. For differential and single ended interface, see “Interface Applications”.
2, 6 26, 30	VTB0, VTB1 VTA0, VTA1		Internal 100 Ω Center−tapped Termination Pin for Differential Input pairs (Figure 4)
3 7 27 31	VREFACB0 VREFACB1 VREFACA0 VREFACA1	−	Output Voltage Reference for Capacitor−Coupled Inputs or Single Ended Interface (see “Interface Applications”)
15 18	SELB SELA	LVTTL / LVCMOS Input	Input Select pin; LOW for IN0 Inputs, HIGH for IN1 Inputs; defaults HIGH when left open
14, 19	NC	−	No Connect
10, 13,16,17 20, 23	VCC	Power	Positive Supply Voltage. All VCC pins must be connected to the positive power supply for correct DC and AC operation.
11, 12 21, 22	$\overline{\text{QB}}$, QB $\overline{\text{QA}}$, QA	LVPECL Output	Inverted, Non−inverted Differential Outputs Note 1.
9, 24	GND	Ground	Negative Supply Voltage, connected to Ground
−	EP	−	The Exposed Pad (EP) on the package bottom is thermally connected to the die for improved heat transfer out of package. The exposed pad must be attached to a heat−sinking conduit. The pad is connected to the die and must only be connected electrically to GND on the PC board.

1. If no signal is applied on any INxn input pair, the device will be susceptible to self−oscillation.
2. All V_{CC} and GND pins must be externally connected to a power supply for proper operation.

Table 2. INPUT SELECT FUNCTION TABLE

SELA/SELB	Q	$\overline{Q}$
L	INx0	$\overline{INx0}$
H	INx1	$\overline{INx1}$

Table 3. ATTRIBUTES

Characteristic		Value
ESD Protection	Human Body Model Machine Model	>2 kV 200 V
Input Pullup resistor (R_{PU})		75 kΩ
Moisture Sensitivity (Note 3)	QFN32	Level 1
Flammability Rating	Oxygen Index: 28 to 34	UL 94 V−0 @ 0.125 in
Transistor Count		1023
Meets or exceeds JEDEC Spec EIA/JESD78 IC Latchup Test		

3. For additional information, see Application Note AND8003/D.

Table 4. MAXIMUM RATINGS (Note 4)

Symbol	Parameter	Condition 1	Condition 2	Rating	Unit
V_{CC}	Positive Power Supply	GND = 0 V		4.0	V
V_{INPP}	Differential Input Voltage |INx − $\overline{INx}$|			1.89	V
I_{IN}	Input Current Through RT (50 Ω Resistor)			±40	mA
I_{OUT}	Output Current	Continuous Surge		±50 ±100	mA
I_{VREFAC}	VREFAC Sink/Source Current			±1.5	mA
T_A	Operating Temperature Range			−40 to +85	°C
T_{stg}	Storage Temperature Range			−65 to +150	°C
θ_{JA}	Thermal Resistance (Junction−to−Ambient) (Note 4)	0 lfpm 500 lfpm	QFN − 32 QFN − 32	31 27	°C/W
θ_{JC}	Thermal Resistance (Junction−to−Case) (Note 4)	Standard Board	QFN − 32	12	°C/W
ψ_{JC}	Thermal Resistance (Junction−to−Board)			16	°C/W
T_{sol}	Wave Solder Pb−Free			265	°C

Stresses exceeding Maximum Ratings may damage the device. Maximum Ratings are stress ratings only. Functional operation above the Recommended Operating Conditions is not implied. Extended exposure to stresses above the Recommended Operating Conditions may affect device reliability.

4. JEDEC standard 51−6, multilayer board − 2S2P (2 signal, 2 power) with eight filled thermal vias under exposed pad.

Table 5. DC CHARACTERISTICS V_{CC} = 2.5 ± 5% (2.375 V to 2.625 V); V_{CC} = 3.3 ± 10% (3.0 V to 3.6 V) (Note 5)

Symbol	Characteristic	Min	Typ	Max	Unit
I_{CC}	Power Supply Current (Inputs and Outputs Open)		65	85	mA
LVPECL OUTPUTS					
V_{OH}	Output HIGH Voltage	V_{CC} – 1.145		V_{CC} – 0.895	mV
V_{OL}	Output LOW Voltage	V_{CC} – 2.000		V_{CC} – 1.695	mV
V_{OUT}	Output Swing (Single Ended) Output Swing (Differential)	400 800	800 1600		mV
DIFFERENTIAL INPUT DRIVEN SINGLE−ENDED (Note 6) (Figures 5 and 6)					
V_{th}	Input Threshold Reference Voltage Range	1125		V_{CC} – 75	mV
V_{IH}	Single−ended Input HIGH Voltage	V_{th} + 75		V_{CC}	mV
V_{IL}	Single−ended Input LOW Voltage	GND		V_{th} – 75	mV
V_{ISE}	Single−ended Input Voltage (V_{IH} – V_{IL}) (Note 6)	150		3015	mV
DIFFERENTIAL INPUTS DRIVEN DIFFERENTIALLY (Note 7) (Figures 7 and 8)					
V_{IHD}	Differential Input HIGH Voltage	1200		V_{CC}	mV
V_{ILD}	Differential Input LOW Voltage	GND		V_{IHD} – 100	mV
V_{ID}	Differential Input Voltage (V_{IHD} – V_{ILD})	100		1890	mV
V_{CMR}	Input Common Mode Range (Differential Configuration) (Figure 9)	1150		V_{CC} – 50	mV
I_{IH}	Input HIGH Current (VTnx Open)	−150		150	μA
I_{IL}	Input LOW Current (VTnx Open)	−150		150	μA
LVTTL / LVCMOS INPUTS (SELA/SELB)					
V_{IH}	Input HIGH Voltage	2.0			V
V_{IL}	Input LOW Voltage			0.8	V
I_{IL}	Input LOW Current (V_{IN} = 0.5 V)	−300			μA
I_{IH}	Input HIGH Current (V_{CC})			75	μA
TERMINATION RESISTORS					
R_{TIN}	Internal Input Termination Resistor INxn/$\overline{\text{INxn}}$ to VTxn	45	50	55	Ω
REFERENCE VOLTAGE					
VREF−AC	Output Reference Voltage	V_{CC} – 1.35	V_{CC} – 1.2	V_{CC} – 1.1	V

NOTE: Device will meet the specifications after thermal equilibrium has been established when mounted in a test socket or printed circuit board with maintained transverse airflow greater than 500 lfpm. Electrical parameters are guaranteed only over the declared operating temperature range. Functional operation of the device exceeding these conditions is not implied. Device specification limit values are applied individually under normal operating conditions and not valid simultaneously.

5. Outputs evaluated with 50 Ω resistors to V_{TT} = V_{CC} – 2.0 V for proper operation (See Figure 16).
6. VTH is applied to the complementary input when operating in single−ended mode. VIH, VIL and VTH parameters must be complied with simultaneously.
7. VIHD, VILD and VCMR parameters must be complied with simultaneously. VCMR max varies 1:1 with V_{CC}.

Table 6. AC CHARACTERISTICS V_{CC} = 2.5 ± 5% (2.375 V to 2.625 V); V_{CC} = 3.3 ± 10% (3.0 V to 3.6 V) (Note 8)

Symbol	Characteristic	Min	Typ	Max	Unit
f_{MAX}	Maximum Input Clock Frequency $V_{outpp} \geq 400$ mV Maximum Operating Data Rate (NRZ) $V_{outpp} \geq 400$ mV	2.5 2.5			Ghz Gbps
fSEL	Maximum Toggle Frequency, SELA/SELB	25	50		MHz
V_{OUTPP}	Output Voltage Amplitude (Differential Interconnect) $f_{in} \leq 2.5$ GHz	400			mVpp
t_{PLH}, t_{PHL}	Propagation Delay to Differential Outputs, @ 1 GHz, INxn/$\overline{INxn}$ to Qx, $\overline{Qx}$ SELx to Qx, $\overline{Qx}$	 160 100	 250 260	 360 400	ps
t_{PLH} Tempco	Differential Propagation Delay Temperature Coefficient		143		Δfs/°C
tskew	Input to Input per Bank Within Device Output Bank to Output Bank Within Device		10 12	20 25	ps
t_{JITTER}	DATA JITTER R_J for K28.7 at 2.5 GHz (RMS) D_J for NRZ PRBS23 / K28.5 at 2.5 Gbps CLOCK JITTER Cycle to Cycle (1K WFMS; RMS) Total Jitter TJ (PP)			 1 10 1 10	ps
tjit(ϕ)	Integrated Phase Jitter fin = 155.52 MHz and 1GHz 12 kHz − 20 MHz Offset (RMS)		35		fs
t_{JITTER}	Crosstalk Induced Jitter Input to Input per Output Bank Within Device (Note 9)			0.7	psRMS
V_{INPP}	Input Voltage Swing (Differential Configuration) (Note 10)	100		1200	mV
t_r, t_f	Output Rise/Fall Times @ 1 GHz (20% – 80%), Q_x, $\overline{Q_x}$	50	100	180	ps

NOTE: Device will meet the specifications after thermal equilibrium has been established when mounted in a test socket or printed circuit board with maintained transverse airflow greater than 500 lfpm. Electrical parameters are guaranteed only over the declared operating temperature range. Functional operation of the device exceeding these conditions is not implied. Device specification limit values are applied individually under normal operating conditions and not valid simultaneously.

8. Differential 50% duty cycle at $V_{INPPmin}$ clock source. Outputs evaluated with 50 Ω resistors to $V_{TT} = V_{CC}$ – 2.0 V (See Figure 16). Input crosspoint to output crosspoint for INxn/$\overline{INxn}$ to Qx, $\overline{Qx}$; 50% input to output crosspoint for SELx to Qx, $\overline{Qx}$. See Figures 5, 10 and 11.
9. Crosstalk is measured at the output while applying two similar clock frequencies that are asynchronous with respect to each other at the inputs.
10. Input voltage swing is a single−ended measurement operating in differential mode.

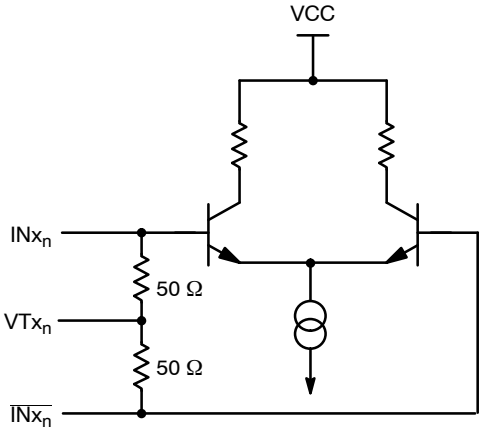

Figure 4. Simplified Input Structure

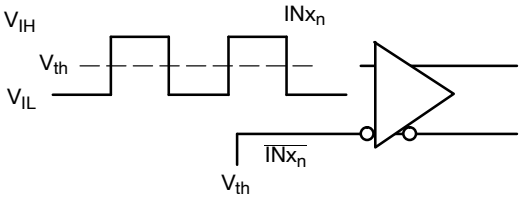

Figure 5. Differential Input Driven Single−Ended

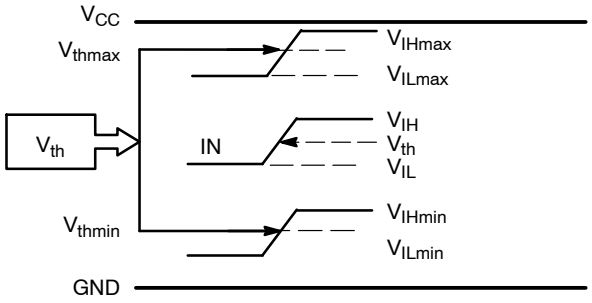

Figure 6. V_{th} Diagram

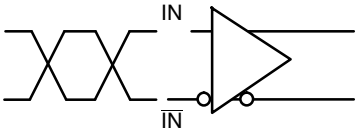

Figure 7. Differential Inputs Driven Differentially

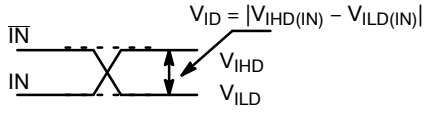

Figure 8. Differential Inputs Driven Differentially

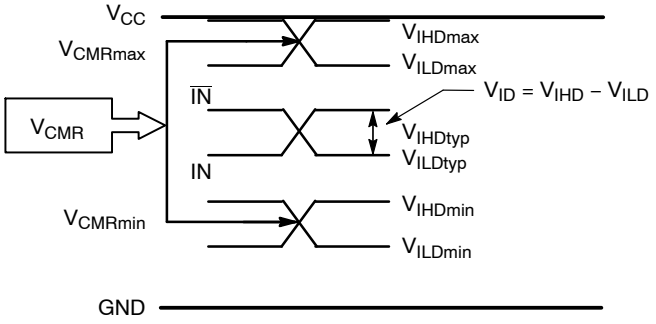

Figure 9. VCMR Diagram

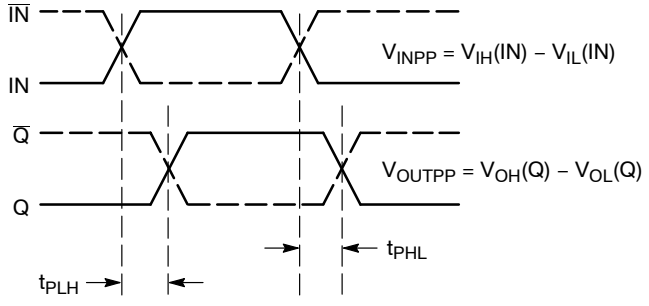

Figure 10. AC Reference Measurement

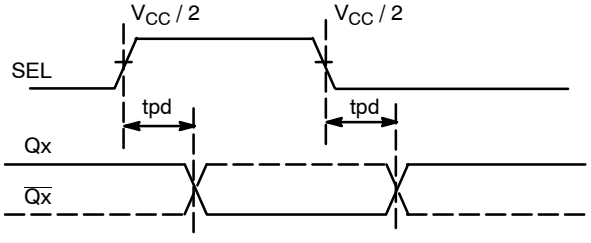

Figure 11. SEL to Qx Timing Diagram

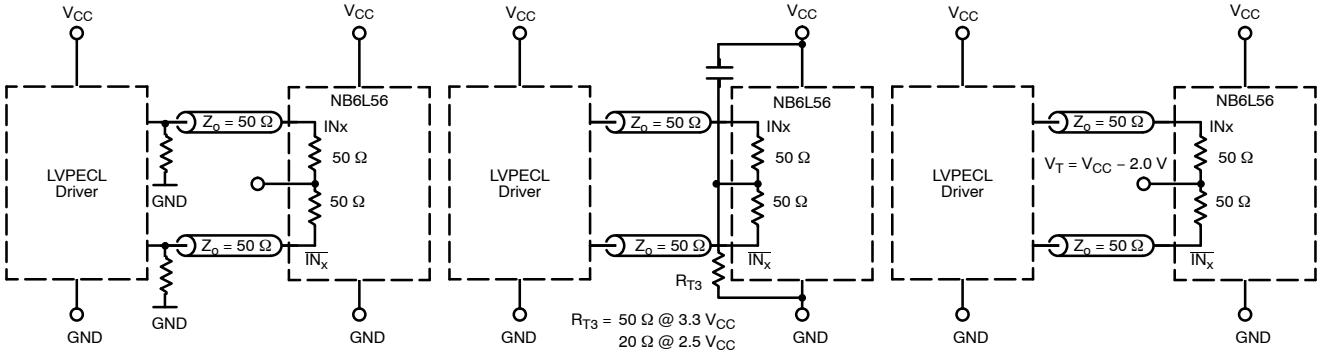

Figure 12. Typical LVPECL Interface (see AND8020)

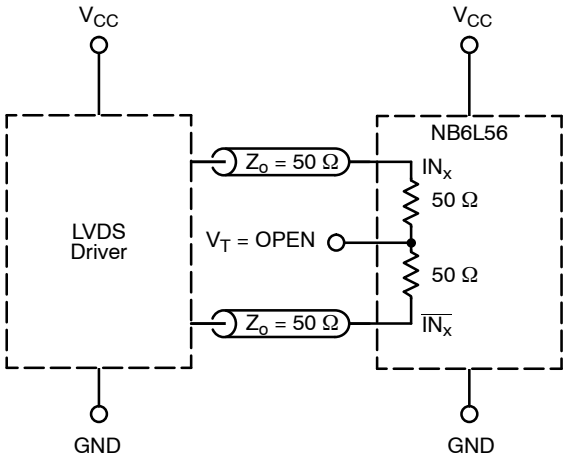

Figure 13. Typical LVDS Interface

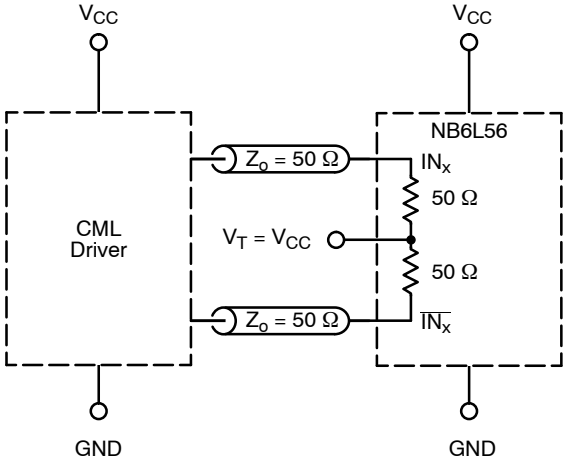

Figure 14. Typical Standard 50 Ω Load CML Interface

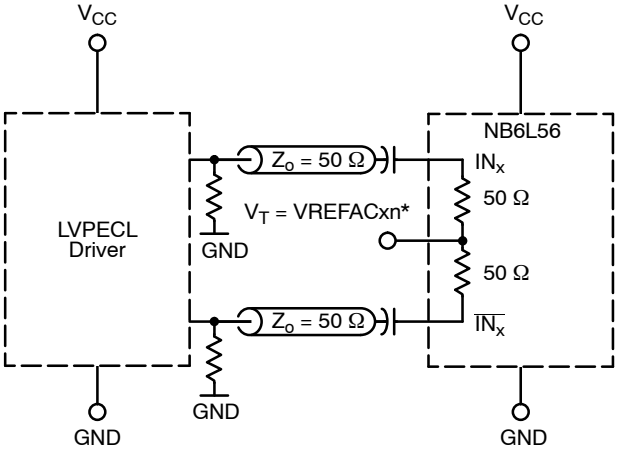

Figure 15. Typical LVPECL Capacitor−Coupled Differential Interface (V_T Connected to V_{REFAC})

*VREFAC bypassed to ground with a 0.01 μF capacitor.

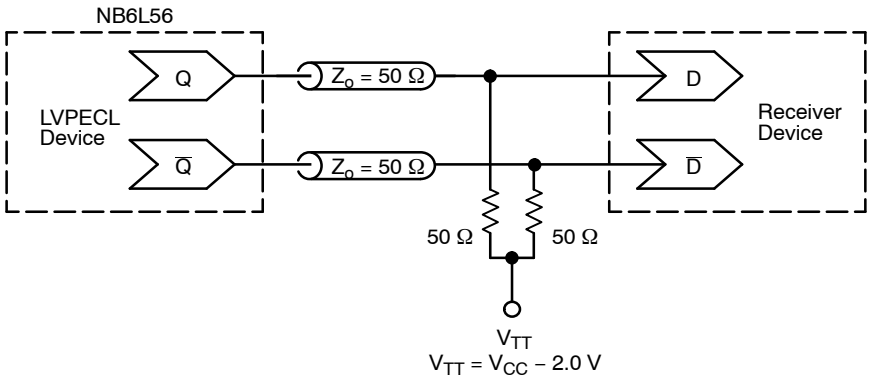

Figure 16. Typical Termination for LVPECL Output Driver and Device Evaluation (See Application Note AND8020/D − Termination of ECL Logic Devices.)

ORDERING INFORMATION

Device	Package	Shipping†
NB6L56MNG	QFN32 (Pb−Free)	74 Units / Rail
NB6L56MNTXG	QFN32 (Pb−Free)	1000 / Tape & Reel

†For information on tape and reel specifications, including part orientation and tape sizes, please refer to our Tape and Reel Packaging Specifications Brochure, BRD8011/D.

PACKAGE DIMENSIONS

QFN32 5*5*1 0.5 P
CASE 488AM−01
ISSUE O

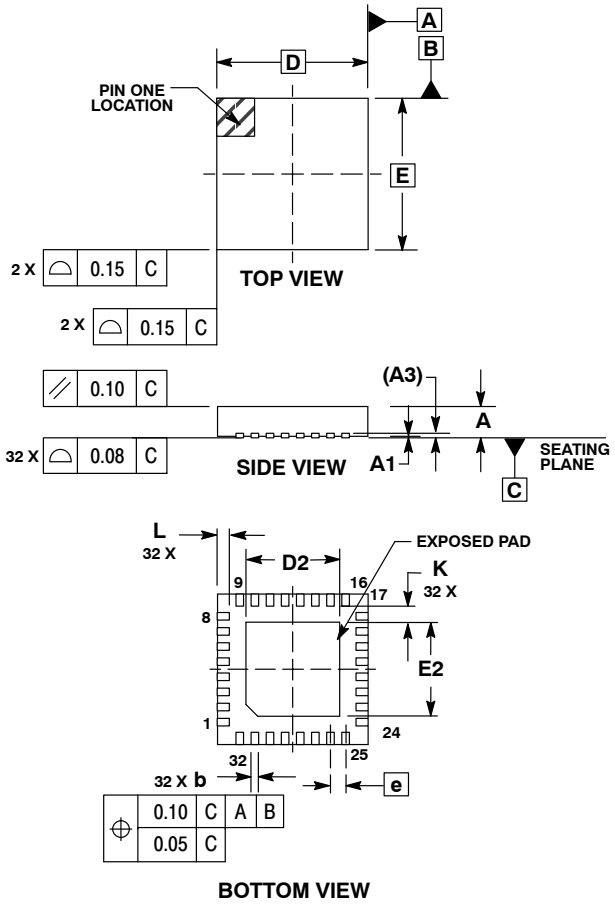

BOTTOM VIEW

NOTES:
1. DIMENSIONS AND TOLERANCING PER ASME Y14.5M, 1994.
2. CONTROLLING DIMENSION: MILLIMETERS.
3. DIMENSION b APPLIES TO PLATED TERMINAL AND IS MEASURED BETWEEN 0.25 AND 0.30 MM TERMINAL
4. COPLANARITY APPLIES TO THE EXPOSED PAD AS WELL AS THE TERMINALS.

	MILLIMETERS		
DIM	MIN	NOM	MAX
A	0.800	0.900	1.000
A1	0.000	0.025	0.050
A3		0.200 REF	
b	0.180	0.250	0.300
D		5.00 BSC	
D2	2.950	3.100	3.250
E		5.00 BSC	
E2	2.950	3.100	3.250
e		0.500 BSC	
K	0.200	−−−	−−−
L	0.300	0.400	0.500

SOLDERING FOOTPRINT*

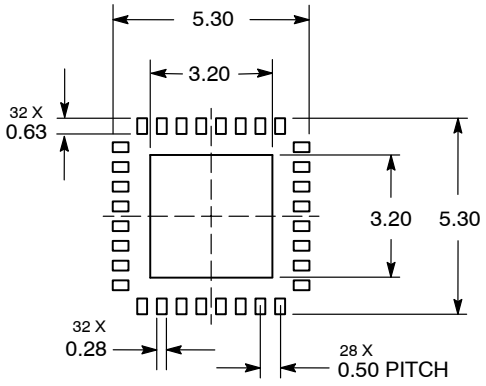

*For additional information on our Pb−Free strategy and soldering details, please download the ON Semiconductor Soldering and Mounting Techniques Reference Manual, SOLDERRM/D.

ECLinPS MAX is a trademark of Semiconductor Components Industries, LLC (SCILLC).

ON Semiconductor and ON are registered trademarks of Semiconductor Components Industries, LLC (SCILLC). SCILLC reserves the right to make changes without further notice to any products herein. SCILLC makes no warranty, representation or guarantee regarding the suitability of its products for any particular purpose, nor does SCILLC assume any liability arising out of the application or use of any product or circuit, and specifically disclaims any and all liability, including without limitation special, consequential or incidental damages. “Typical” parameters which may be provided in SCILLC data sheets and/or specifications can and do vary in different applications and actual performance may vary over time. All operating parameters, including “Typicals” must be validated for each customer application by customer’s technical experts. SCILLC does not convey any license under its patent rights nor the rights of others. SCILLC products are not designed, intended, or authorized for use as components in systems intended for surgical implant into the body, or other applications intended to support or sustain life, or for any other application in which the failure of the SCILLC product could create a situation where personal injury or death may occur. Should Buyer purchase or use SCILLC products for any such unintended or unauthorized application, Buyer shall indemnify and hold SCILLC and its officers, employees, subsidiaries, affiliates, and distributors harmless against all claims, costs, damages, and expenses, and reasonable attorney fees arising out of, directly or indirectly, any claim of personal injury or death associated with such unintended or unauthorized use, even if such claim alleges that SCILLC was negligent regarding the design or manufacture of the part. SCILLC is an Equal Opportunity/Affirmative Action Employer. This literature is subject to all applicable copyright laws and is not for resale in any manner.

PUBLICATION ORDERING INFORMATION

LITERATURE FULFILLMENT:
Literature Distribution Center for ON Semiconductor
P.O. Box 5163, Denver, Colorado 80217 USA
Phone: 303−675−2175 or 800−344−3860 Toll Free USA/Canada
Fax: 303−675−2176 or 800−344−3867 Toll Free USA/Canada
Email: orderlit@onsemi.com

N. American Technical Support: 800−282−9855 Toll Free USA/Canada
Europe, Middle East and Africa Technical Support:
Phone: 421 33 790 2910
Japan Customer Focus Center
Phone: 81−3−5817−1050

ON Semiconductor Website: **www.onsemi.com**

Order Literature: http://www.onsemi.com/orderlit

For additional information, please contact your local Sales Representative