NB3N51034

3.3V, Crystal to 100MHz/ 200MHz Quad HCSL/LVDS Clock Generator

The NB3N51034 is a high precision, low phase noise clock generator that supports spread spectrum designed for PCI Express applications. This device takes a 25 MHz fundamental mode parallel resonant crystal and generates 4 differential HCSL/LVDS outputs at 100 MHz or 200 MHz (See Figure 8 for LVDS interface). The NB3N51034 provides selectable spread options of −0.5%, −1.0%, −1.5%, for applications demanding low Electromagnetic Interference (EMI) as well as optimum performance with no spread option.

Features

- Uses 25 MHz Fundamental Mode Parallel Resonant Crystal
- Power Down Mode
- 4 Low Skew HCSL or LVDS Outputs
- OE Tri−States Outputs
- Spread of −0.5%, −1.0%, −1.5% and No Spread
- PCIe Gen 1, Gen 2, Gen 3, Gen 4 Compliant
- Phase Noise (SS OFF) @ 100 MHz:

Offset	Noise Power
100 Hz	−110 dBc/Hz
1 kHz	−123 dBc/Hz
10 kHz	−134 dBc/Hz
100 kHz	−137 dBc/Hz
1 MHz	−138 dBc/Hz
10 MHz	−154 dBc/Hz

- Operating Supply Voltage Range 3.3 V ±5%
- Industrial Temperature Range −40°C to +85°C
- Functionally Compatible with IDT557−05, IDT5V41066, IDT5V41236 with enhanced performance
- These are Pb−Free Devices

Applications

- Networking
- Consumer
- Computing and Peripherals
- Industrial Equipment
- PCIe Clock Generation Gen 1, Gen 2, Gen 3 and Gen 4

End Products

- Switch and Router
- Set Top Box, LCD TV
- Servers, Desktop Computers
- Automated Test Equipment

ON Semiconductor®

www.onsemi.com

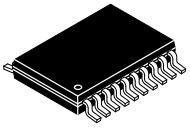

TSSOP−20
DT SUFFIX
CASE 948E

MARKING DIAGRAM

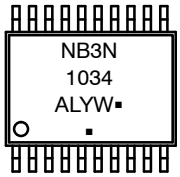

A	= Assembly Location
L	= Wafer Lot
Y	= Year
W	= Work Week
▪	= Pb−Free Package

(Note: Microdot may be in either location)

ORDERING INFORMATION

See detailed ordering and shipping information on page 10 of this data sheet.

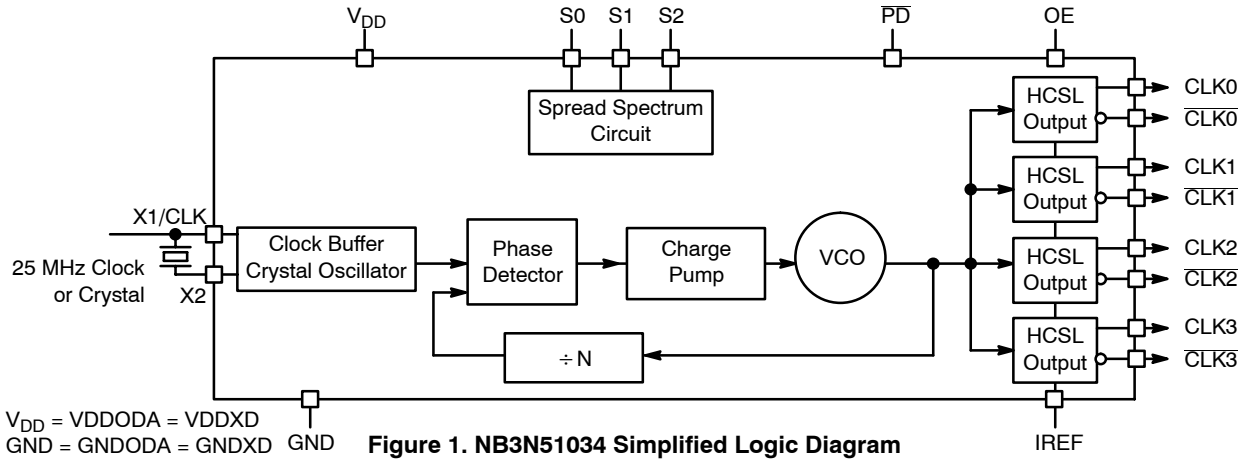

Figure 1. NB3N51034 Simplified Logic Diagram

© Semiconductor Components Industries, LLC, 2014

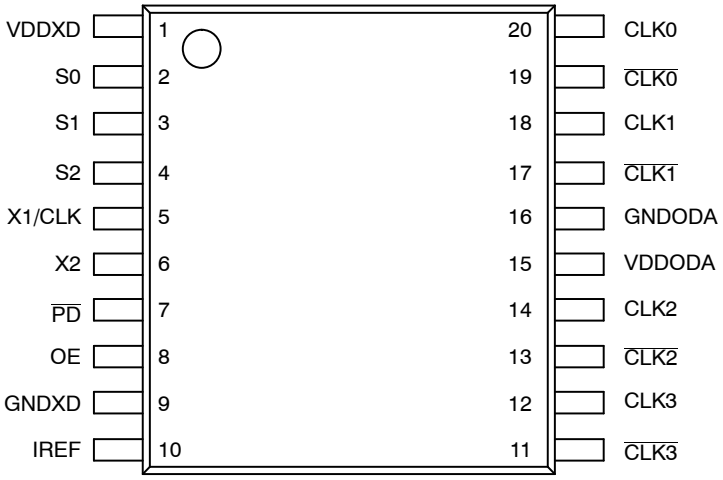

Figure 2. Pin Configuration (Top View)

Table 1. PIN DESCRIPTION

Pin	Symbol	I/O	Description
1	VDDXD	Power	Connect to a +3.3 V source.
2	S0	Input	LVTTL/LVCMOS frequency select input 0. Internal pullup resistor to VDDXD. See output select table 2 for details.
3	S1	Input	LVTTL/LVCMOS frequency select input 1. Internal pullup resistor to VDDXD. See output select Table 2 for details.
4	S2	Input	LVTTL/LVCMOS frequency select input 2. Internal pullup resistor to VDDXD. See output select Table 2 for details.
5	X1/CLK	Input	Crystal interface or single−ended reference clock input.
6	X2	Output	Crystal interface. Float this pin for reference clock input CLK.
7	$\overline{PD}$	Input	LVTTL/LVCMOS power down input. Assert this pin LOW to enter power down mode. Internal pull−up resistor to VDDXD.
8	OE	Input	Output enable. Tri−state output (High=enable outputs, Low=disable outputs). Internal pull−up resistor.
9	GNDXD	Power	Connect to digital circuit ground.
10	IREF	Output	Precision resistor attached to this pin is connected to the internal current reference.
11	$\overline{CLK3}$	HCSL or LVDS Output	Inverted clock output. (For LVDS levels see Figure 8)
12	CLK3	HCSL or LVDS Output	Noninverted clock output. (For LVDS levels see Figure 8)
13	$\overline{CLK2}$	HCSL or LVDS Output	Inverted clock output. (For LVDS levels see Figure 8)
14	CLK2	HCSL or LVDS Output	Noninverted clock output. (For LVDS levels see Figure 8)
15	VDDODA	Power	Connect to a +3.3 V analog source.
16	GNDODA	Power	Output and analog circuit ground.
17	$\overline{CLK1}$	HCSL or LVDS Output	Inverted clock output. (For LVDS levels see Figure 8)
18	CLK1	HCSL or LVDS Output	Noninverted clock output. (For LVDS levels see Figure 8)
19	$\overline{CLK0}$	HCSL or LVDS Output	Inverted clock output. (For LVDS levels see Figure 8)
20	CLK0	HCSL or LVDS Output	Noninverted clock output. (For LVDS levels see Figure 8)

Table 2. OUTPUT FREQUENCY AND SPREAD SPECTRUM SELECT TABLE

S2*	S1*	S0*	Spread%	Spread Type	Output Frequency
0	0	0	−0.5	Down	100
0	0	1	−1.0	Down	100
0	1	0	−1.5	Down	100
0	1	1	No Spread	N/A	100
1	0	0	−0.5	Down	200
1	0	1	−1.0	Down	200
1	1	0	−1.5	Down	200
1	1	1	No Spread	N/A	200

*Pins S2, S1 and S0 default high when left open.

Recommended Crystal Parameters

Crystal	Fundamental AT−Cut
Frequency	25 MHz
Load Capacitance	16−20 pF
Shunt Capacitance, C0	7 pF Max
Equivalent Series Resistance	50 Ω Max
Initial Accuracy at 25 °C	±20 ppm
Temperature Stability	±30 ppm
Aging	±20 ppm

Table 3. ATTRIBUTES

Characteristic		Value
Internal Input Default State Resistor (OE, Sx, $\overline{PD}$)		110 kΩ
ESD Protection	Human Body Model	2 kV
Moisture Sensitivity, Indefinite Time Out of Dray Pack (Note 1)		Level 1
Flammability Rating	Oxygen Index: 28 to 34	UL 94 V−0 @ 0.125 in
Transistor Count		132,000
Meets or exceeds JEDEC Spec EIA/JESD78 IC Latchup Test		

1. For additional information, see Application Note AND8003/D.

Table 4. MAXIMUM RATINGS (Note 2)

Symbol	Parameter	Rating	Units
V_{DD}	Positive Power Supply with respect to GND (VDDXD and VDDODA)	4.6	V
V_I	Input Voltage with respect to GND (V_{IN})	−0.5 V to V_{DD}+0.5 V	V
T_A	Operating Temperature Range	−40 to +85	°C
T_{stg}	Storage Temperature Range	−65 to +150	°C
θ_{JA}	Thermal Resistance (Junction−to−Ambient) (Note 3) 0 lfpm 500 lfpm	70 61	°C/W °C/W
θ_{JC}	Thermal Resistance (Junction−to−Case)	50	°C/W
T_{sol}	Wave Solder	265	°C

Stresses exceeding those listed in the Maximum Ratings table may damage the device. If any of these limits are exceeded, device functionality should not be assumed, damage may occur and reliability may be affected.

2. Maximum ratings applied to the device are individual stress limit values (not normal operating conditions) and not valid simultaneously. If stress limits are exceeded device functional operation is not implied, damage may occur and reliability may be affected.
3. JEDEC standard multilayer board − 2S2P (2 signal, 2 power).

Table 5. DC CHARACTERISTICS (V_{DD} = 3.3 V ±5%, GND = 0 V, T_A = −40°C to +85°C, Note 4)

Symbol	Characteristic	Min	Typ	Max	Unit
V_{DD}	Power Supply Voltage (VDDXD and VDDODA)	3.135	3.3	3.465	V
GND	Power Supply Ground (GNDXD and GNDODA)		0		V
I_{DD}	Power Supply Current, 200 MHz output, −1.5% spread		135		mA
I_{DDOE}	Power Supply Current when OE is Set Low		60		mA
I_{DDPD}	Power Supply Current ($\overline{PD}$ = Low, no load)		1.5		mA
V_{IH}	Input HIGH Voltage (X1/CLK, S0, S1, S2 and OE)	2000		V_{DD} + 300	mV
V_{IL}	Input LOW Voltage (X1/CLK, S0, S1, S2 and OE)	GND − 300		800	mV
Vmax	Absolute Maximum Output Voltage (Notes 5, 6)			1150	mV
Vmin	Absolute Minimum Output Voltage (Notes 5, 7)	−300			mV
Vrb	Ringback Voltage (Notes 8, 9)	−100		100	mV
V_{OH}	Output High Voltage (Note 5)	660		850	mV
V_{OL}	Output Low Voltage (Note 5)	−150		27	mV
V_{CROSS}	Absolute Crossing Voltage (Notes 5, 9, 10)	250		550	mV
ΔV_{CROSS}	Total Variation of V_{CROSS} (Notes 5, 9, 11)			140	mV

NOTE: Device will meet the specifications after thermal equilibrium has been established when mounted in a test socket or printed circuit board with maintained transverse airflow greater than 500 lfpm.

4. VDDXD and VDDODA power pins must be shorted to power supply voltage V_{DD} and GNDXD and GNDODA ground pins must be shorted to power supply ground GND. Measurement taken with outputs terminated with R_S = 33.2 Ω, R_L = 50 Ω, with test load capacitance of 2 pF and current biasing resistor set at 475 Ω. See Figure 7. Guaranteed by characterization.
5. Measurement taken from single-ended waveform
6. Defined as the maximum instantaneous voltage value including positive overshoot
7. Defined as the maximum instantaneous voltage value including negative overshoot
8. Measurement taken from differential waveform
9. Measured at crossing point where the instantaneous voltage value of the rising edge of CLKx+ equals the falling edge of CLKx-.
10. Refers to the total variation from the lowest crossing point to the highest, regardless of which edge is crossing. Refers to all crossing points for this measurement.
11. Defined as the total variation of all crossing voltage of rising CLKx+ and falling CLKx-. This is maximum allowed variance in the V_{CROSS} for any particular system.

Table 6. AC CHARACTERISTICS (V_{DD} = 3.3 V ±5%, GND = 0 V, T_A = −40°C to +85°C; Note 12)

Symbol	Characteristic	Min	Typ	Max	Unit
f_{CLKIN}	Clock/Crystal Input Frequency		25		MHz
f_{CLKOUT}	Output Clock Frequency		100/200		MHz
ϕ_{NOISE}	Phase−Noise Performance SS OFF f_{CLKOUT} = 100 MHz @ 100 Hz offset from carrier @ 1 kHz offset from carrier @ 10 kHz offset from carrier @ 100 kHz offset from carrier @ 1 MHz offset from carrier @ 10 MHz offset from carrier		 −110 −123 −134 −137 −138 −154		dBc/Hz
$t_{JIT(\Phi)}$	Phase RMS Jitter, Integration Range 12 kHz to 20 MHz		0.4		ps
f_{MOD}	Spread Spectrum Modulation Frequency	30	31.5	33.33	kHz
SSC_{RED}	Spectral Reduction, f_{CLKOUT} of 100 MHz with −0.5% spread, 3rd Harmonic (Note 13)		−10		dB
t_{SKEW}	Within Device Output to Output Skew			40	ps
Eppm	Frequency Synthesis Error, All Outputs		0		ppm
t_{SPREAD}	Spread Spectruction Transition Time (Stablization Time After Spread Spectrum Changes)	7		30	ms
t_{OE}	Output Enable/Disable Time (All outputs) (Note 14)			10	μs
t_{DUTY_CYCLE}	Output Clock Duty Cycle (Measured at cross point)	45	50	55	%
t_R	Output Risetime (Measured from 175 mV to 525 mV, Figure 9)	175	340	700	ps
t_F	Output Falltime (Measured from 525 mV to 175 mV, Figure 9)	175	400	700	ps
Δt_R	Output Risetime Variation (Single−Ended)			125	ps
Δt_F	Output Falltime Variation (Single−Ended)			125	ps
Stabilization Time	Stabilization Time From Powerup V_{DD} = 3.3 V		3.0		ms

NOTE: Device will meet the specifications after thermal equilibrium has been established when mounted in a test socket or printed circuit board with maintained transverse airflow greater than 500 lfpm.

12. VDDXD and VDDODA power pins must be shorted to power supply voltage V_{DD} and GNDXD and GNDODA ground pins must be shorted to power supply ground GND. Measurement taken from differential output on single−ended channel terminated with R_S = 33.2 Ω, R_L = 50 Ω, with test load capacitance of 2 pF and current biasing resistor set at 475 Ω. See Figure 7. Guaranteed by characterization.
13. Spread spectrum clocking enabled.
14. Output pins are tri−stated when OE is asserted LOW. Output pins are driven differentially when OE is HIGH unless device is in power down mode, $\overline{PD}$ = Low.

Table 7. AC ELECTRICAL CHARACTERISTICS – PCI EXPRESS JITTER SPECIFICATIONS,
V_{DD} = 3.3 V ± 5%, T_A = −40°C to 85°C

Symbol	Parameter	Test Conditions		Min	Typ	Max	PCIe Industry Spec	Unit
tj (PCIe Gen 1)	Phase Jitter Peak−to−Peak (Notes 16 and 19)	f = 100 MHz, 25 MHz Crystal Input Evaluation Band: 0 Hz – Nyquist (clock frequency/2)	SSOFF		10	20	86	ps
			SSON (−0.5%)		19	28		
tREFCLK_HF_RMS (PCIe Gen 2)	Phase Jitter RMS (Notes 17 and 19)	f = 100 MHz, 25 MHz Crystal Input High Band: 1.5 MHz – Nyquist (clock frequency/2)	SSOFF		1.0	1.8	3.1	ps
			SSON (−0.5%)		1.1	1.9		
tREFCLK_LF_RMS (PCIe Gen 2)	Phase Jitter RMS (Notes 17 and 19)	f = 100 MHz, 25 MHz Crystal Input Low Band: 10 kHz – 1.5 MHz	SSOFF		0.1	0.15	3.0	ps
			SSON (−0.5%)		0.8	1.1		
tREFCLK_RMS (PCIe Gen 3)	Phase Jitter RMS (Notes 18 and 19)	f = 100 MHz, 25 MHz Crystal Input Evaluation Band: 0 Hz – Nyquist (clock frequency/2)	SSOFF		0.35	0.7	1.0	ps
			SSON (−0.5%)		0.55	0.8		
tREFCLK_RMS (PCIe Gen 4)	Phase Jitter RMS (Notes 18 and 19)	f = 100 MHz, 25 MHz Crystal Input Evaluation Band: 0 Hz – Nyquist (clock frequency/2)	SSOFF		0.35	0.5	0.5	ps

15. Electrical parameters are guaranteed over the specified ambient operating temperature range, which is established when the device is mounted in a test socket with maintained transverse airflow greater than 500 lfpm. The device will meet specifications after thermal equilibrium has been reached under these conditions.
16. Peak−to−Peak jitter after applying system transfer function for the Common Clock Architecture. Maximum limit for PCI Express Gen 1 is 86 ps peak−to−peak for a sample size of 10^6 clock periods.
17. RMS jitter after applying the two evaluation bands to the two transfer functions defined in the Common Clock Architecture and reporting the worst case results for each evaluation band. Maximum limit for PCI Express Generation 2 is 3.1 ps RMS for $t_{REFCLK_HF_RMS}$ (High Band) and 3.0ps RMS for $t_{REFCLK_LF_RMS}$ (Low Band).
18. RMS jitter after applying system transfer function for the common clock architecture.
19. VDDXD and VDDODA power pins must be shorted to power supply voltage V_{DD} and GNDXD and GNDODA ground pins must be shorted to power supply ground GND. Measurement taken from differential output on single−ended channel terminated with R_S = 33.2 Ω, R_L = 50 Ω, with test load capacitance of 2 pF and current biasing resistor set at 475 Ω. See Figure 7. This parameter is guaranteed by characterization. Not tested in production.

PHASE NOISE

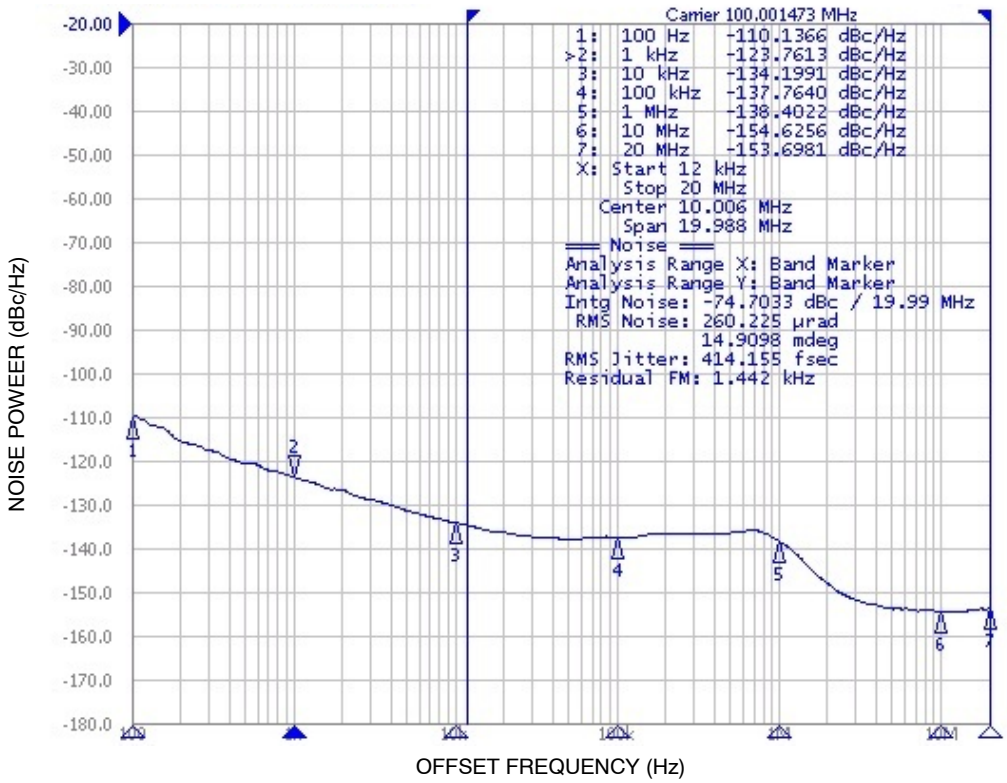

Figure 3. Typical Phase Noise Plot at 100 MHz; (f_{CLKIN} = 25 MHz Crystal , f_{CLKOUT} = 100 MHz SS OFF, RMS Phase Jitter for Integration Range 12 kHz to 20 MHz = 414 fs, Output Termination = HCSL type)

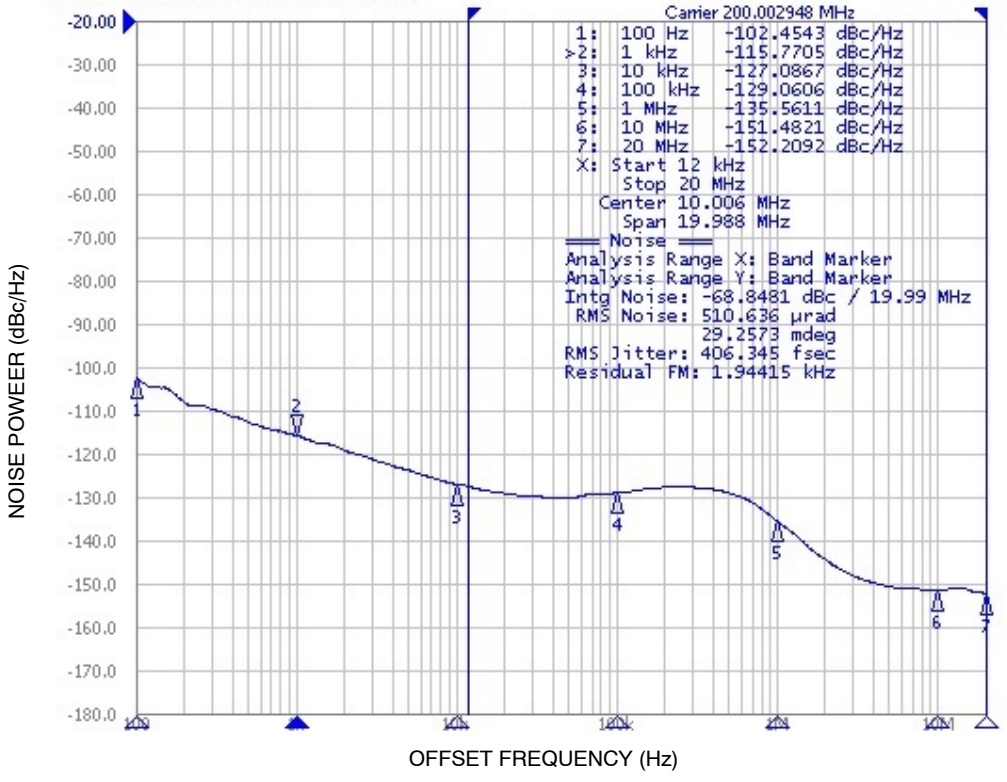

Figure 4. Typical Phase Noise Plot at 200 MHz; (f_{CLKIN} = 25 MHz Crystal , f_{CLKOUT} = 200 MHz SS OFF, RMS Phase Jitter for Integration Range 12 kHz to 20 MHz = 406 fs, Output Termination = HCSL type)

APPLICATION INFORMATION

Crystal Input Interface

Figure 5 shows the NB3N51034 device crystal oscillator interface using a typical parallel resonant crystal. The device crystal connections should include pads for small capacitors from X1 to ground and from X2 to ground. These capacitors, C_1 and C_2, need to consider the stray capacitances of the board and are used to match the nominally required crystal load capacitance C_L. A parallel crystal with loading capacitance C_L = 18 pF would use C_1 = 26 pF and C_2 = 26 pF as nominal values, assuming approximately 2 pF of stray capacitance per trace and approximately 8 pF of internal capacitance.

$C_L = (C_1 + C_{stray} + C_{in}) / 2$; $C_1 = C_2$

The frequency accuracy and duty cycle skew can be fine-tuned by adjusting the C_1 and C_2 values. For example, increasing the C_1 and C_2 values will reduce the operational frequency.

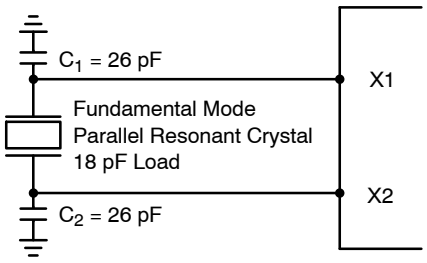

Figure 5. Crystal Interface Loading

Power Supply Filter

In order to isolate the NB3N51034 from system power supply, noise decoupling is required. The 10 μF and a 0.1 μF cap from supply pins to GND decoupling capacitor has to be connected between V_{DD} (pins 1 and 15) and GND (pins 9 and 6). It is recommended to place decoupling capacitors as close as possible to the device to minimize lead inductance.

Termination

The output buffer structure is shown in the Figure 6.

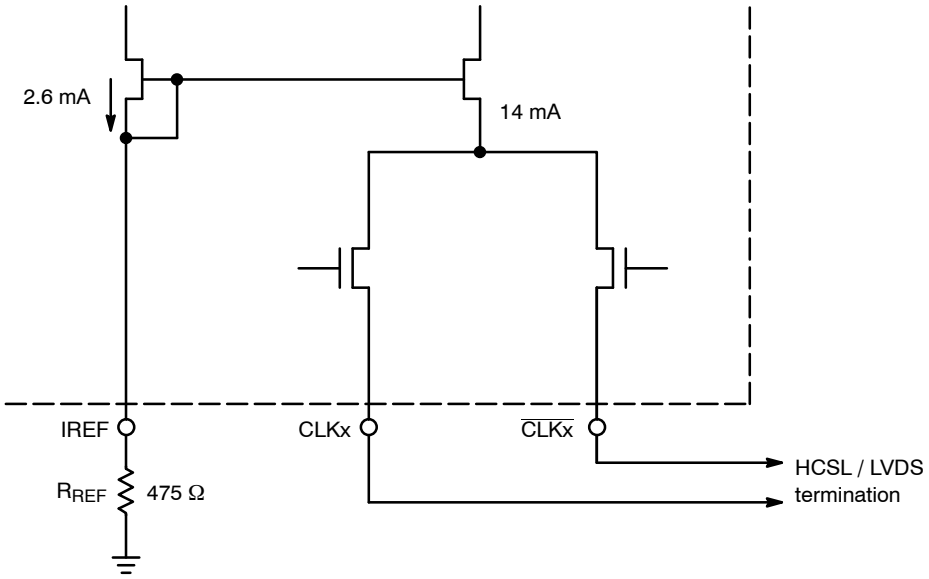

Figure 6. Simplified Output Structure

The outputs can be terminated to drive HCSL receiver (see Figure 7) or LVDS receiver (see Figure 8). HCSL output interface requires 49.9 Ω termination resistors to GND for generating the output levels. LVDS output interface may not require the 100 Ω near the LVDS receiver if the receiver has internal 100 Ω termination. An optional series resistor R_L may be connected to reduce the overshoots in case of impedance mismatch.

HCSL INTERFACE

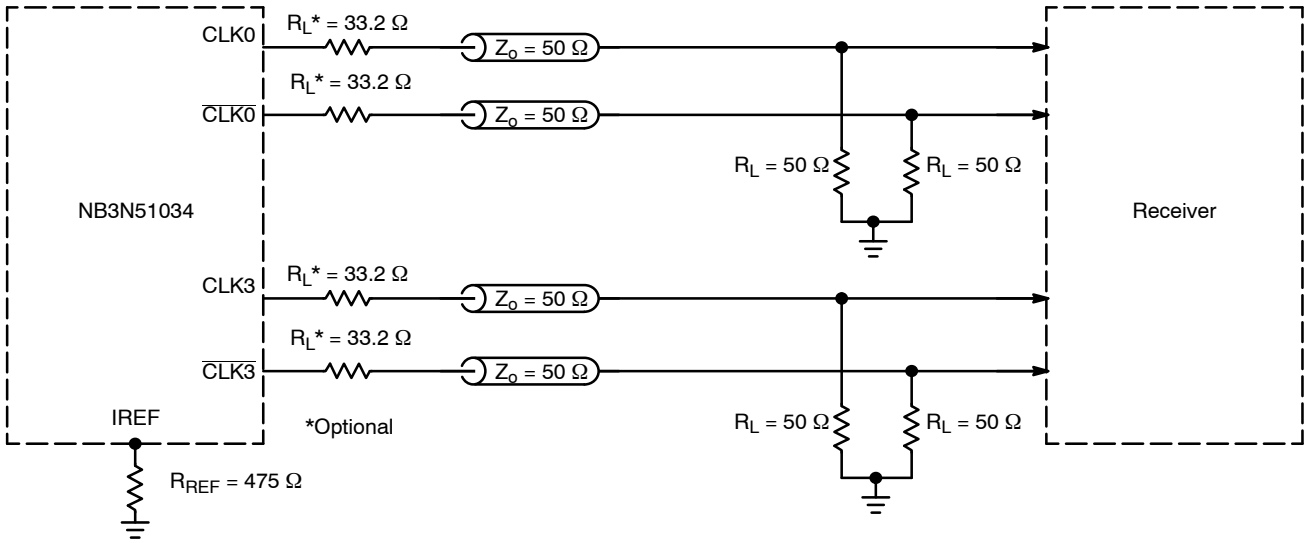

Figure 7. Typical Termination for HCSL Output Driver and Device Evaluation

LVDS COMPATIBLE INTERFACE

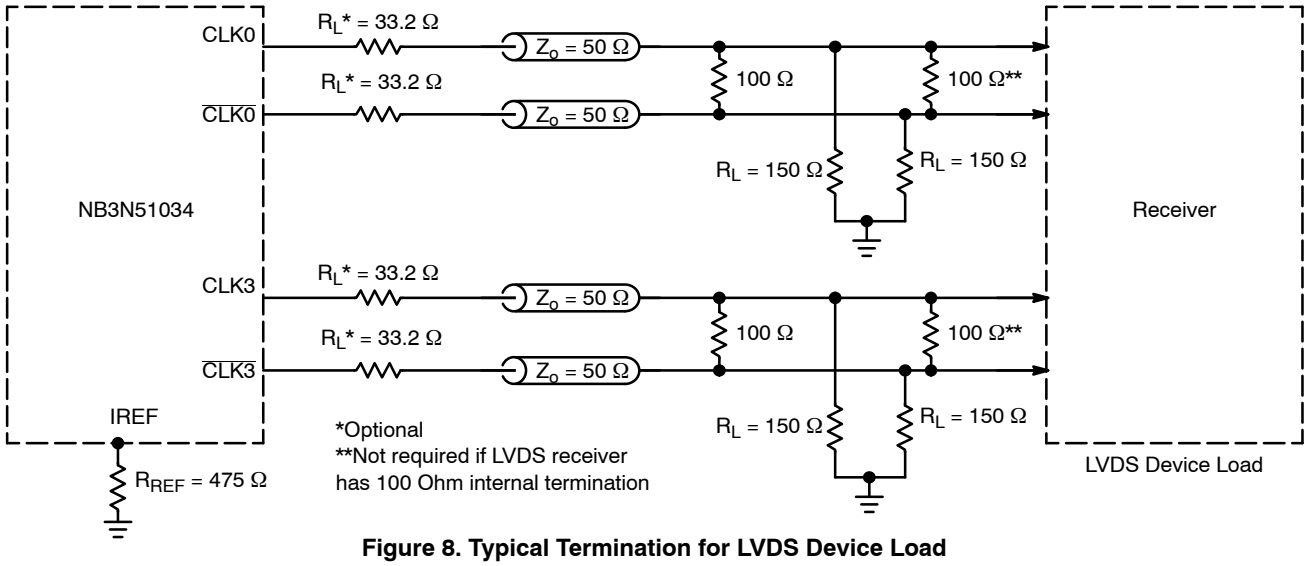

Figure 8. Typical Termination for LVDS Device Load

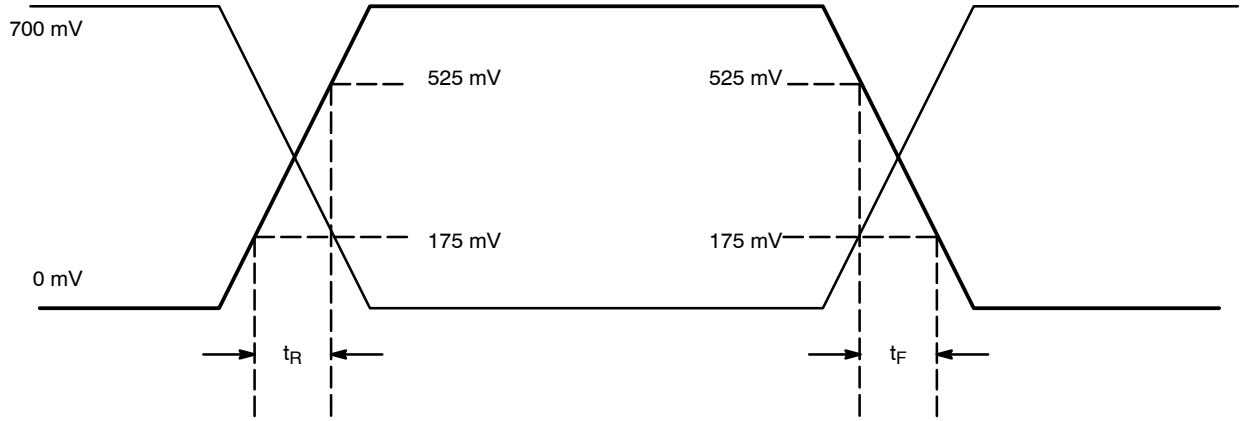

Figure 9. HCSL Output Parameter Characteristics

ORDERING INFORMATION

Device	Package	Shipping†
NB3N51034DTG	TSSOP−20 (Pb−Free)	75 Units / Rail
NB3N51034DTR2G	TSSOP−20 (Pb−Free)	2500 / Tape & Reel

†For information on tape and reel specifications, including part orientation and tape sizes, please refer to our Tape and Reel Packaging Specifications Brochure, BRD8011/D.

PACKAGE DIMENSIONS

TSSOP−20 WB
CASE 948E
ISSUE D

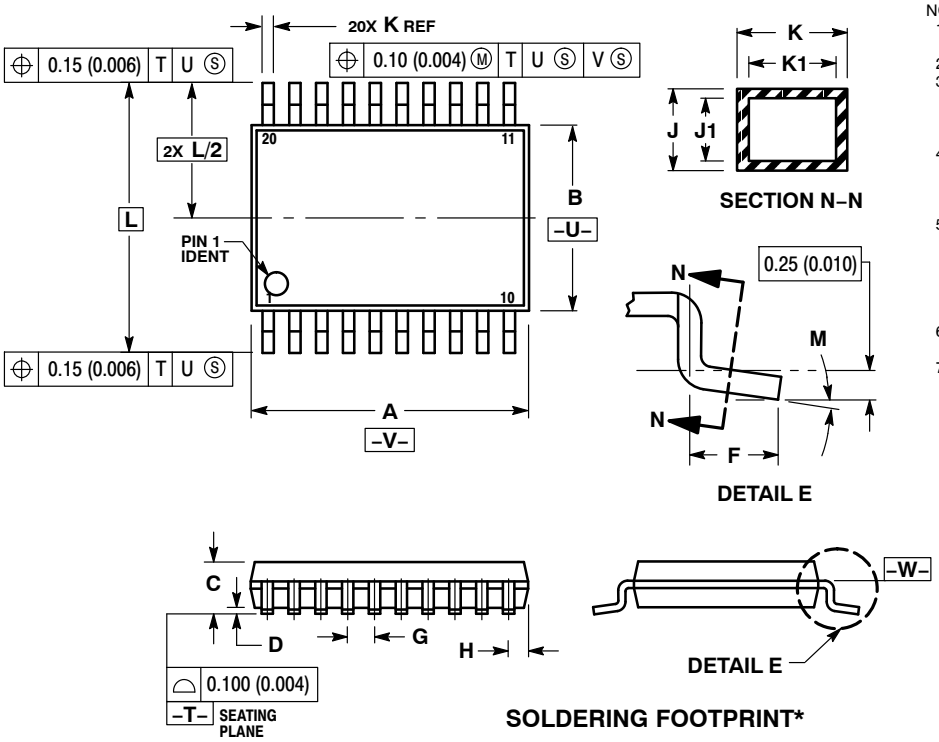

NOTES:
1. DIMENSIONING AND TOLERANCING PER ANSI Y14.5M, 1982.
2. CONTROLLING DIMENSION: MILLIMETER.
3. DIMENSION A DOES NOT INCLUDE MOLD FLASH, PROTRUSIONS OR GATE BURRS. MOLD FLASH OR GATE BURRS SHALL NOT EXCEED 0.15 (0.006) PER SIDE.
4. DIMENSION B DOES NOT INCLUDE INTERLEAD FLASH OR PROTRUSION. INTERLEAD FLASH OR PROTRUSION SHALL NOT EXCEED 0.25 (0.010) PER SIDE.
5. DIMENSION K DOES NOT INCLUDE DAMBAR PROTRUSION. ALLOWABLE DAMBAR PROTRUSION SHALL BE 0.08 (0.003) TOTAL IN EXCESS OF THE K DIMENSION AT MAXIMUM MATERIAL CONDITION.
6. TERMINAL NUMBERS ARE SHOWN FOR REFERENCE ONLY.
7. DIMENSION A AND B ARE TO BE DETERMINED AT DATUM PLANE −W−.

	MILLIMETERS		INCHES	
DIM	MIN	MAX	MIN	MAX
A	6.40	6.60	0.252	0.260
B	4.30	4.50	0.169	0.177
C	---	1.20	---	0.047
D	0.05	0.15	0.002	0.006
F	0.50	0.75	0.020	0.030
G	0.65 BSC		0.026 BSC	
H	0.27	0.37	0.011	0.015
J	0.09	0.20	0.004	0.008
J1	0.09	0.16	0.004	0.006
K	0.19	0.30	0.007	0.012
K1	0.19	0.25	0.007	0.010
L	6.40 BSC		0.252 BSC	
M	0°	8°	0°	8°

SOLDERING FOOTPRINT*

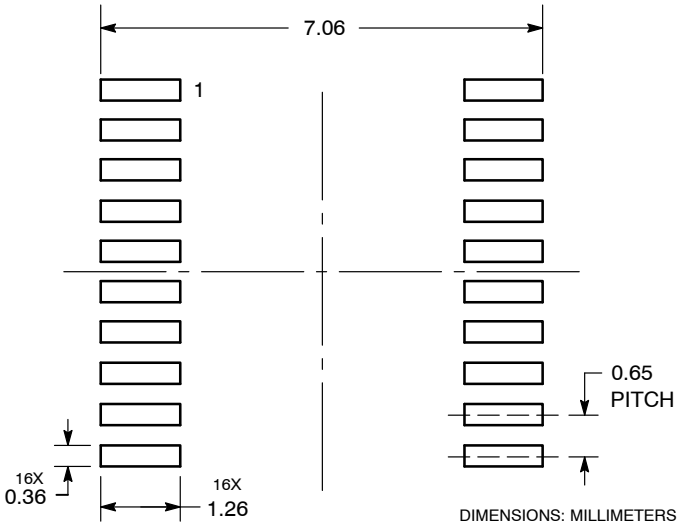

*For additional information on our Pb−Free strategy and soldering details, please download the ON Semiconductor Soldering and Mounting Techniques Reference Manual, SOLDERRM/D.

ON Semiconductor and ON are trademarks of Semiconductor Components Industries, LLC dba ON Semiconductor or its subsidiaries in the United States and/or other countries. ON Semiconductor owns the rights to a number of patents, trademarks, copyrights, trade secrets, and other intellectual property. A listing of ON Semiconductor's product/patent coverage may be accessed at www.onsemi.com/site/pdf/Patent−Marking.pdf. ON Semiconductor reserves the right to make changes without further notice to any products herein. ON Semiconductor makes no warranty, representation or guarantee regarding the suitability of its products for any particular purpose, nor does ON Semiconductor assume any liability arising out of the application or use of any product or circuit, and specifically disclaims any and all liability, including without limitation special, consequential or incidental damages. Buyer is responsible for its products and applications using ON Semiconductor products, including compliance with all laws, regulations and safety requirements or standards, regardless of any support or applications information provided by ON Semiconductor. "Typical" parameters which may be provided in ON Semiconductor data sheets and/or specifications can and do vary in different applications and actual performance may vary over time. All operating parameters, including "Typicals" must be validated for each customer application by customer's technical experts. ON Semiconductor does not convey any license under its patent rights nor the rights of others. ON Semiconductor products are not designed, intended, or authorized for use as a critical component in life support systems or any FDA Class 3 medical devices or medical devices with a same or similar classification in a foreign jurisdiction or any devices intended for implantation in the human body. Should Buyer purchase or use ON Semiconductor products for any such unintended or unauthorized application, Buyer shall indemnify and hold ON Semiconductor and its officers, employees, subsidiaries, affiliates, and distributors harmless against all claims, costs, damages, and expenses, and reasonable attorney fees arising out of, directly or indirectly, any claim of personal injury or death associated with such unintended or unauthorized use, even if such claim alleges that ON Semiconductor was negligent regarding the design or manufacture of the part. ON Semiconductor is an Equal Opportunity/Affirmative Action Employer. This literature is subject to all applicable copyright laws and is not for resale in any manner.

PUBLICATION ORDERING INFORMATION

LITERATURE FULFILLMENT:
Literature Distribution Center for ON Semiconductor
19521 E. 32nd Pkwy, Aurora, Colorado 80011 USA
Phone: 303−675−2175 or 800−344−3860 Toll Free USA/Canada
Fax: 303−675−2176 or 800−344−3867 Toll Free USA/Canada
Email: orderlit@onsemi.com

N. American Technical Support: 800−282−9855 Toll Free USA/Canada
Europe, Middle East and Africa Technical Support:
Phone: 421 33 790 2910
Japan Customer Focus Center
Phone: 81−3−5817−1050

ON Semiconductor Website: **www.onsemi.com**

Order Literature: http://www.onsemi.com/orderlit

For additional information, please contact your local Sales Representative