NB3L02

2.8 V, High Precision 1:2 Clock Fanout Buffer

Description

The NB3L02 is a low−skew, low jitter 1:2 clock fanout buffer, ideal for use in portable end−equipment, such as mobile phones or tablet applications. The MCLK_IN pin has an integrated AC coupling capacitor and will directly accept a square or sine wave clock input, such as a temperature compensated crystal oscillator (TCXO). The minimum acceptable input amplitude of the sine wave is 800 mV peak−to−peak. The NB3L02 is offered in a 0.4 mm pitch 6−ball, wafer−level chip−scale package (WLCSP) (0.77 mm x 1.17 mm).

Features

- 800 mV Single Ended Outputs
- Low Phase Noise: −144 dbc/Hz @ 10 kHz Offset
- Ultra Small Package: 0.4 mm Pitch WLCSP6 (0.77 mm x 1.17 mm)
- Exceeds JEDEC ESD Standards: 4000 V HBM, 200 V MM
- Industrial Temperature Range: −40°C to +85°C
- These are Pb−Free Devices

PIN DESCRIPTIONS

Ball No.	Name	I/O	Description
A1	V_{DD}	I	Power Supply Voltage
A2	CLK_OUT1	O	Clock Output 1
B1	MCLK_IN	I	Master Clock Input
B2	GND	–	Ground
C1	GND	–	Ground
C2	CLK_OUT2	O	Clock Output 2

ON Semiconductor®

http://onsemi.com

WLCSP6
FC SUFFIX
CASE 567HJ

MARKING DIAGRAM

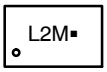

L2 = Specific Device Code
M = Date Code
▪ = Pb−Free Package

PINOUT DIAGRAM

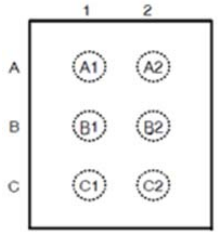

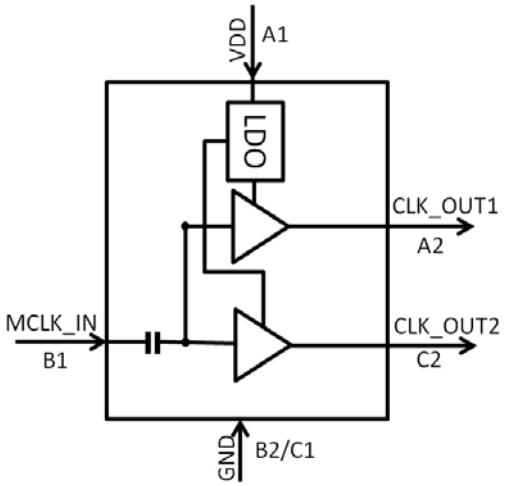

Figure 1. Simplified Block Diagram

ORDERING INFORMATION

See detailed ordering and shipping information in the package dimensions section on page 3 of this data sheet.

© Semiconductor Components Industries, LLC, 2013

Table 1. MAXIMUM RATINGS

Symbol	Parameter	Condition	Min	Max	Unit
	Voltage Range (Note 1)	MCLK_IN,CLK_OUT1, CLK_OUT2	-0.3	V_{DD} + 0.3	V
IO	Continuous Output Current	CLK_OUT1/2		±20	mA
T_J	Operating Junction Temperature Range		−40	150	°C
T_{stg}	Storage Temperature Range		−55	150	°C

Stresses exceeding Maximum Ratings may damage the device. Maximum Ratings are stress ratings only. Functional operation above the Recommended Operating Conditions is not implied. Extended exposure to stresses above the Recommended Operating Conditions may affect device reliability.

1. All voltage values are with respect to network ground terminal.

Table 2. ATTRIBUTES

Characteristic		Value
ESD Protection	Human Body Model	>4 kV
	Machine Model	>200 V
Moisture Sensitivity	WLCSP6	Level 1
Maximum Soldering Temperature for Lead−free Devices Using a Lead−free Solder Paste		260
Flammability Rating Oxygen Index: 28 to 34		UL 94 V−0 @ 0.125 in
Transistor Count		149
Meets or Exceeds JEDEC Spec EIA/JESD78 IC Latchup Test II		

Table 3. ELECTRICAL CHARACTERISTICS (T_A = −40°C to +85°C)

Symbol	Characteristic		Min	Typ	Max	Unit
V_{DD}	Supply Voltage		2.3	2.8	3.465	V
V_{IN}	Input Voltage p-p		800		V_{DD}	mV
V_{OUT}	Output Voltage p-p		0.6	0.8	1.0	V
$I_{DDdynamic}$	Dynamic Current at 26 MHz			3.5	5	mA
F_{IN}	MCLK_IN Frequency Range with 800 mV input p−p		10	26	52	MHz
t_{PD}	MCLK_IN to CLK_OUT_n Propagation Delay, input = 1 Vp−p @ 26 MHz		2.0	4.0	6.5	ns
DC	CLK_OUT_n Duty Cycle		45	50	55	%
−	Phase Noise, F_{IN} = 26 MHz, input t_r/t_f < 1 ns	1 kHz Offset 10 kHz Offset 100 kHz Offset		−134 −144 −148		dbc/Hz dbc/Hz dbc/Hz
t_r/t_f	Output Rise Time 20%-80% with 10 pF Load, V_{IN} = 800 mVp−p, 26 MHz, input slew rate < 1 ns/V		0.5	0.8	1.2	ns
t_{sk}	Channel to Channel Skew			10	30	ps
V_{oh}	High Level Output (V_{oh}−V_{ol} not to exceed V_{OUT})		0.6	0.8	1.0	V
V_{ol}	Low Level Output (V_{oh}−V_{ol} not to exceed V_{OUT})			0		V

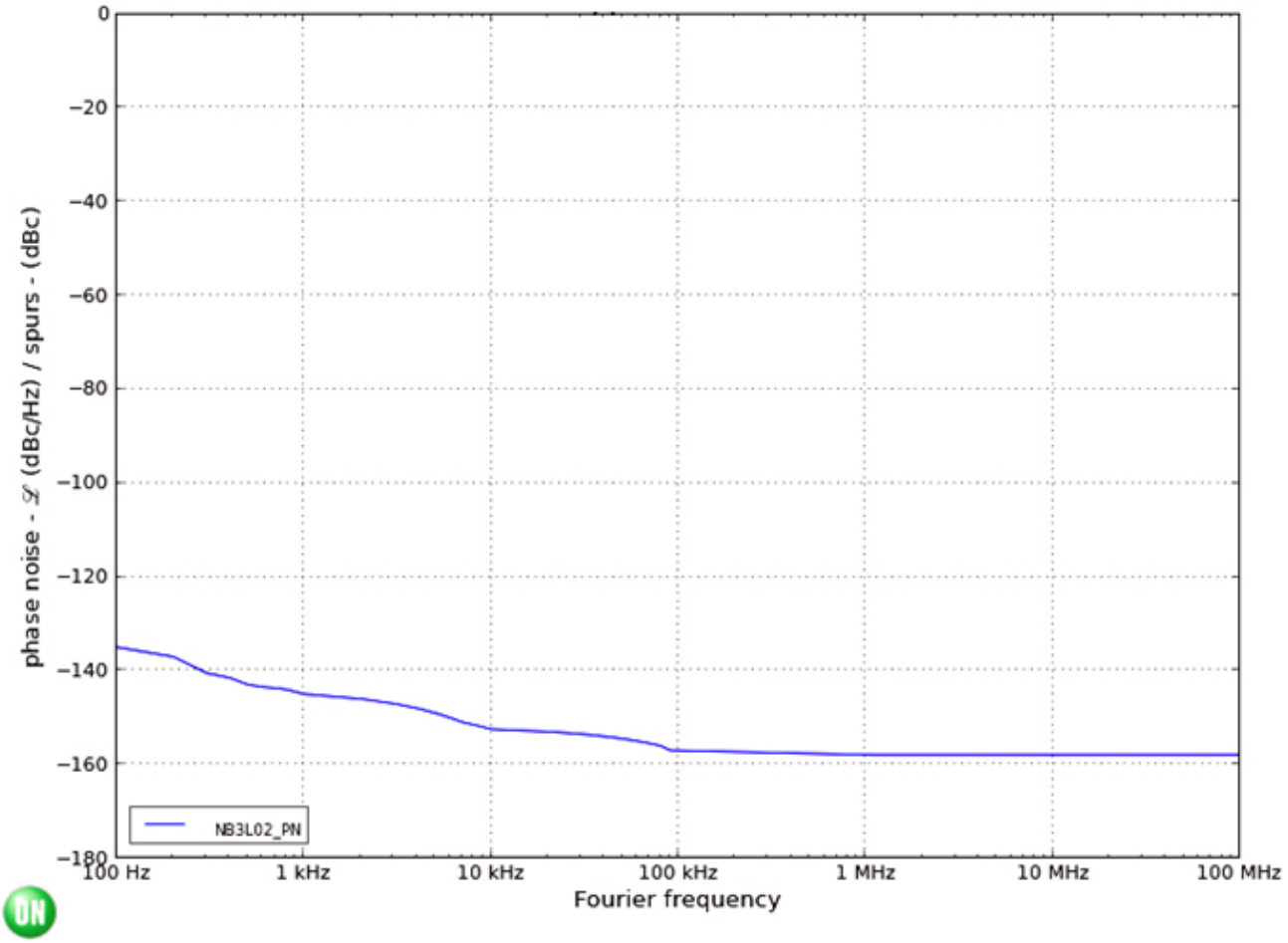

Figure 2. Typical Phase Noise

ORDERING INFORMATION

Device	Package	Shipping†
NB3L02FCT2G	WLCSP6 (Pb−Free)	3000 / Tape & Reel

†For information on tape and reel specifications, including part orientation and tape sizes, please refer to our Tape and Reel Packaging Specifications Brochure, BRD8011/D.

PACKAGE DIMENSIONS

WLCSP6, 1.17x0.77
CASE 567HJ
ISSUE O

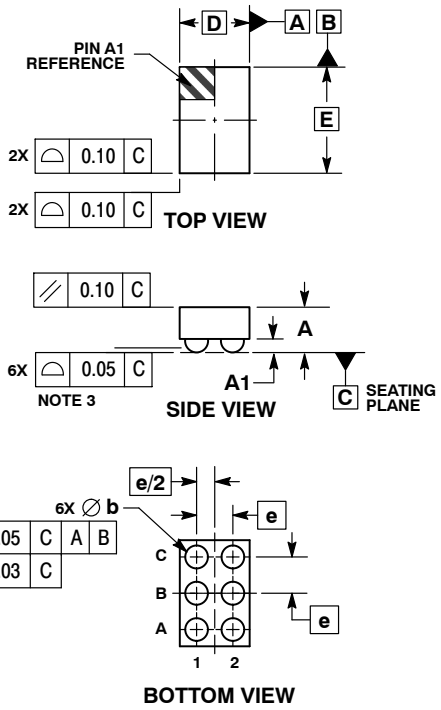

NOTES:
1. DIMENSIONING AND TOLERANCING PER ASME Y14.5M, 1994.
2. CONTROLLING DIMENSION: MILLIMETERS.
3. COPLANARITY APPLIES TO SPHERICAL CROWNS OF SOLDER BALLS.

	MILLIMETERS	
DIM	MIN	MAX
A	---	0.50
A1	0.13	0.17
b	0.21	0.25
D	0.77 BSC	
E	1.17 BSC	
e	0.40 BSC	

RECOMMENDED SOLDERING FOOTPRINT*

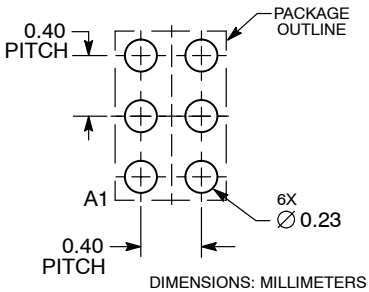

DIMENSIONS: MILLIMETERS

*For additional information on our Pb−Free strategy and soldering details, please download the ON Semiconductor Soldering and Mounting Techniques Reference Manual, SOLDERRM/D.

ON Semiconductor and ON are registered trademarks of Semiconductor Components Industries, LLC (SCILLC). SCILLC owns the rights to a number of patents, trademarks, copyrights, trade secrets, and other intellectual property. A listing of SCILLC's product/patent coverage may be accessed at www.onsemi.com/site/pdf/Patent−Marking.pdf. SCILLC reserves the right to make changes without further notice to any products herein. SCILLC makes no warranty, representation or guarantee regarding the suitability of its products for any particular purpose, nor does SCILLC assume any liability arising out of the application or use of any product or circuit, and specifically disclaims any and all liability, including without limitation special, consequential or incidental damages. "Typical" parameters which may be provided in SCILLC data sheets and/or specifications can and do vary in different applications and actual performance may vary over time. All operating parameters, including "Typicals" must be validated for each customer application by customer's technical experts. SCILLC does not convey any license under its patent rights nor the rights of others. SCILLC products are not designed, intended, or authorized for use as components in systems intended for surgical implant into the body, or other applications intended to support or sustain life, or for any other application in which the failure of the SCILLC product could create a situation where personal injury or death may occur. Should Buyer purchase or use SCILLC products for any such unintended or unauthorized application, Buyer shall indemnify and hold SCILLC and its officers, employees, subsidiaries, affiliates, and distributors harmless against all claims, costs, damages, and expenses, and reasonable attorney fees arising out of, directly or indirectly, any claim of personal injury or death associated with such unintended or unauthorized use, even if such claim alleges that SCILLC was negligent regarding the design or manufacture of the part. SCILLC is an Equal Opportunity/Affirmative Action Employer. This literature is subject to all applicable copyright laws and is not for resale in any manner.

PUBLICATION ORDERING INFORMATION

LITERATURE FULFILLMENT:
Literature Distribution Center for ON Semiconductor
P.O. Box 5163, Denver, Colorado 80217 USA
Phone: 303−675−2175 or 800−344−3860 Toll Free USA/Canada
Fax: 303−675−2176 or 800−344−3867 Toll Free USA/Canada
Email: orderlit@onsemi.com

N. American Technical Support: 800−282−9855 Toll Free USA/Canada
Europe, Middle East and Africa Technical Support:
Phone: 421 33 790 2910
Japan Customer Focus Center
Phone: 81−3−5817−1050

ON Semiconductor Website: **www.onsemi.com**

Order Literature: http://www.onsemi.com/orderlit

For additional information, please contact your local Sales Representative

NB3L02/D