3M™ Four-Wall Header

.100" x .100" Low Profile, SMT Straight, Straight and Rt Angle Through-Hole 2500 Series



- Low profile, space saving design
- Center slot polarization prevents mis-insertions and reduces insertion time
- Dual slot polarization means broader compatibility with competitive polarization designs (not 6, 8 or 10 pos.)
- Optional retainer clip for locking sockets in place and increasing connection reliability in vibration-prone environments
- Optional high temperature insulator suitable for "no lead" soldering operations
- High temperature option in through-hole version suitable for "paste in hole" reflow soldering techniques
- Exposed solder tails (on right angle version) provide ease of cleaning and reduced repair costs
- Straight surface mount version available
- See the Regulatory Information Appendix (RIA) in the "RoHS Compliance" section of www.3Mconnectors.com for compliance information.

Date Modified: December 15, 2011

Physical

Insulator	
Material:	Glass Filled Polyester (PBT), Glass Filled Polyester (PCT) - High Temperature Option
Flammability:	UL 94V-0
Color:	Gray (PBT) or Black (PCT)
Contact Material:	Copper Alloy
Plating	
Underplating:	100 µ" [2.54 µm] Nickel - Overall
Wiping Area:	Gold (See Ordering Information)
Solder Tails:	200 µ" [5.08 µm] Tin Lead or Matte Tin (See Ordering Information)
Marking:	3M Logo, Part Identification Number and Orientation Triangle

Electrical

Current Rating: 5.00 A, 1 Contact Powered
3.00 A, 6 Contacts Powered
1.75 A, All Contacts Powered
Rating Conditions: EIA-364-070 Method 2, 30°C maximum temperature rise, 20% derated.
Reference appropriate 3M Product Specification for detailed current derating curves.

Insulation Resistance: >1 x 10^9 Ω at 500 V_{DC}

Withstanding Voltage: 1000 V_{RMS} at Sea Level

Environmental

Temperature Rating: -55°C to +105°C

Process Rating: High Temp PCT insulator version: 260°C, per J-STD-020C, single pass
PBT insulator version: 191°C, maximum insulator temperature, solder wave process only

Moisture Sensitivity Level: 1 (per J-STD-020C)

UL File No.: E68080

3M™ Four-Wall Header

.100" x .100" Low Profile, Straight Through-Hole 2500 Series

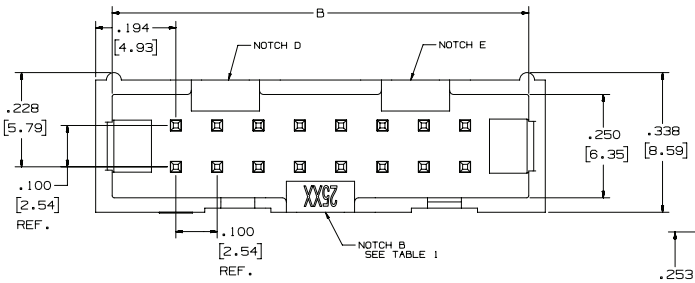

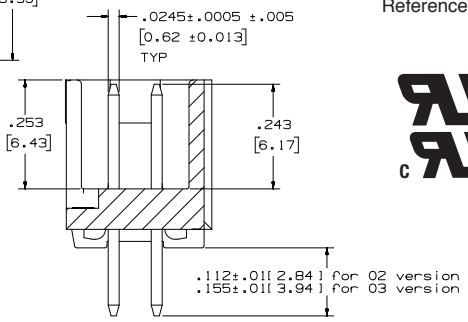

SECTION A - A

Inch
(mm)

Tolerance Unless Noted			
	.0	.00	.000
	±	± .01	± .005

[ ] Dimensions for Reference only

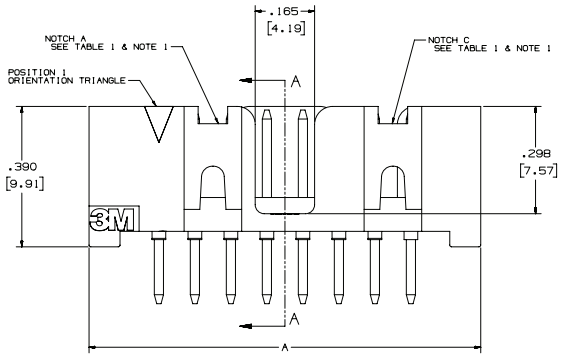

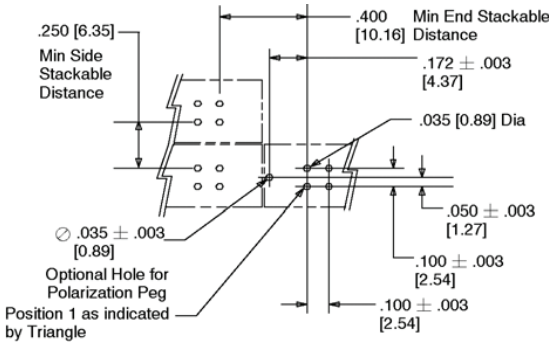

Recommended P.C. Board Hole Pattern

(Shown for mounting side of board.)

Table 1

Pin Qty	Dimensions A		Dimensions B		Polarizing Notches
6	0.588	(14.94)	0.508	(12.90)	B
8	0.688	(17.48)	0.608	(15.44)	B
10	0.788	(20.02)	0.708	(17.98)	BC
14	0.988	(25.10)	0.908	(23.06)	BCDE
16	1.088	(27.64)	1.008	(25.60)	ABCDE
20	1.288	(32.72)	1.208	(30.68)	ABCDE
24	1.488	(37.80)	1.408	(35.76)	ABCDE
26	1.588	(40.34)	1.508	(38.30)	ABCDE
30	1.788	(45.42)	1.708	(43.38)	ABCDE
34	1.988	(50.50)	1.908	(48.46)	ABCDE
36	2.088	(53.04)	2.008	(51.00)	ABCDE
40	2.288	(58.12)	2.208	(56.08)	ABCDE
50	2.788	(70.82)	2.708	(68.78)	ABCDE
60	3.288	(83.52)	3.208	(81.48)	ABCDE
64	3.488	(88.60)	3.408	(86.56)	ABCDE

Notes:
1. Notches A & C will accomodate 3M Polarizing Keys (3M Part #3518 or N3518).
2. Contact tails .0245 [0.622] wire with .0075 [0.191] corner radii & .028 [.072] diagonal.
3. Solder stand offs facilitate .01 clearance above board for reflow soldering.

Ordering Information

X25XX - 60XX - XX

Prefix:
N = High Temp. Black (PCT)
(RB, UB, or UG Pltg. Req'd)
Blank = Std. Temp. Gray (PBT)
(UB or UG Pltg. Req'd)

Pin Quantity:
(See Table 1)

Solder Tail
02 = for .062 [1.57] thick board (Standard)
03 = for .094 to .125 [2.39 to 3.18] thick board

Plating:
RB = 30μ" [0.76μm] Gold with 200μ" [5.08 μm] Matte Tin Solder Tails (RIA E1 & C1 apply)
UG = 15μ" [0.38μm] Gold with 200μ" [5.08μm] 60:40 Tin-Lead Solder Tails (RIA E3 & C2 apply)
UB = 30μ" [0.76μm] Gold with 200μ" [5.05μm] 60:40 Tin-Lead Solder Tails (RIA E3 & C2 apply)

3M
Electronic Solutions Division
Interconnect Solutions
http://www.3Mconnectors.com

3M is a trademark of 3M Company.
For technical, sales or ordering information call
800-225-5373

3M™ Four-Wall Header

.100" x .100" Low Profile, Right Angle Through-Hole — 2500 Series

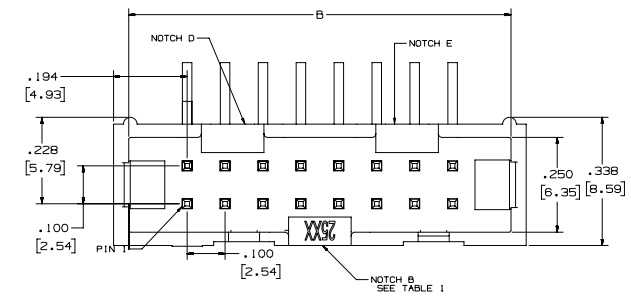

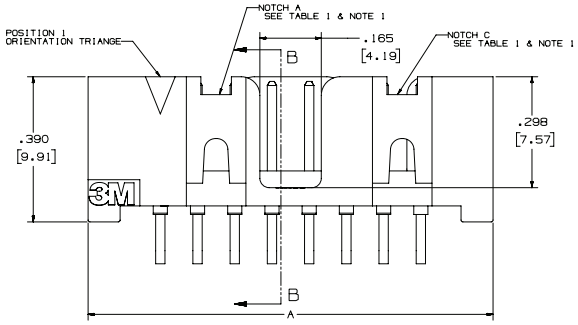

Table 1			
Pin Qty	Dimensions		Polarizing Notches
	A	B	
6	0.588 (14.94)	0.508 (12.90)	B
8	0.688 (17.48)	0.608 (15.44)	B
10	0.788 (20.02)	0.708 (17.98)	BC
14	0.988 (25.10)	0.908 (23.06)	BCDE
16	1.088 (27.64)	1.008 (25.60)	ABCDE
20	1.288 (32.72)	1.208 (30.68)	ABCDE
24	1.488 (37.80)	1.408 (35.76)	ABCDE
26	1.588 (40.34)	1.508 (38.30)	ABCDE
30	1.788 (45.42)	1.708 (43.38)	ABCDE
34	1.988 (50.50)	1.908 (48.46)	ABCDE
36	2.088 (53.04)	2.008 (51.00)	ABCDE
40	2.288 (58.12)	2.208 (56.08)	ABCDE
50	2.788 (70.82)	2.708 (68.78)	ABCDE
60	3.288 (83.52)	3.208 (81.48)	ABCDE
64	3.488 (88.60)	3.408 (86.56)	ABCDE

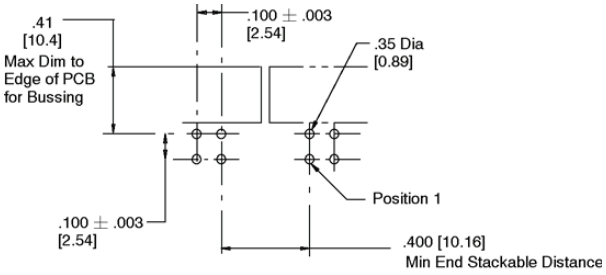

Recommended Mounting Hole Pattern

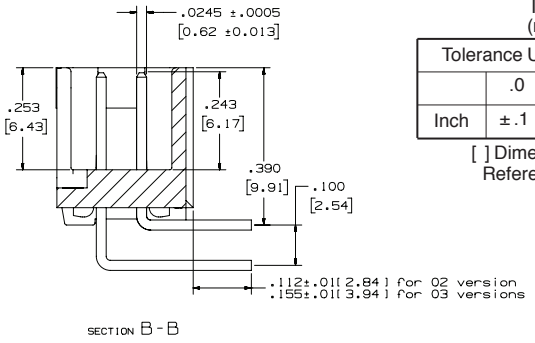

Inch
(mm)

Tolerance Unless Noted			
	.0	.00	.000
Inch	± .1	± .01	± .005

[ ] Dimensions for Reference only

Notes:
1. Notches A & C will accomodate 3M Polarizing Keys (3M Part #3518 or N3518).
2. Contacts tails .0245 [0.622] wire with .0075 [0.191] corner radii & .028 [.071] diagonal.

Ordering Information

X25XX - 50XX - XX

Prefix:
N = High Temp. Black (PCT)
(RB, UB, or UG Pltg. Req'd)
Blank = Std. Temp. Gray (PBT)(UB or UG Pltg. Req'd)

Pin Quantity:
(See Table 1)

Solder Tail
02 = for .062 [1.57] thick board (Standard)
03 = for .094 to .125 [2.39 to 3.18] thick board

Plating:
RB = 30μ" [0.76μm] Gold with 200μ" [5.08μm] Matte Tin Solder Tails (RIA E1 & C1 apply)
UG = 15μ" [0.38μm] Gold with 200μ" [5.08μm] 60:40 Tin-Lead Solder Tails (RIA E3 & C2 apply)
UB = 30μ" [0.76μm] Gold with 200μ" [5.05μm] 60:40 Tin-Lead Solder Tails (RIA E3 & C2 apply)

3M
Electronic Solutions Division
Interconnect Solutions
http://www.3Mconnectors.com

3M is a trademark of 3M Company.
For technical, sales or ordering information call
800-225-5373

3M™ Four-Wall Header

.100" x .100" Low Profile, Surface Mount Straight

2500 Series

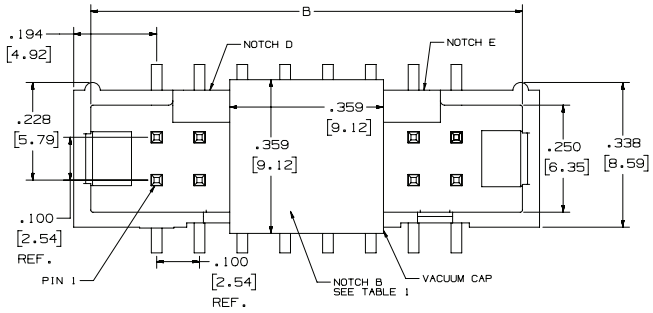

Inch (mm)			
Tolerance Unless Noted			
	.0	.00	.000
Inch	±.1	±.01	±.005

[ ] Dimensions for Reference only

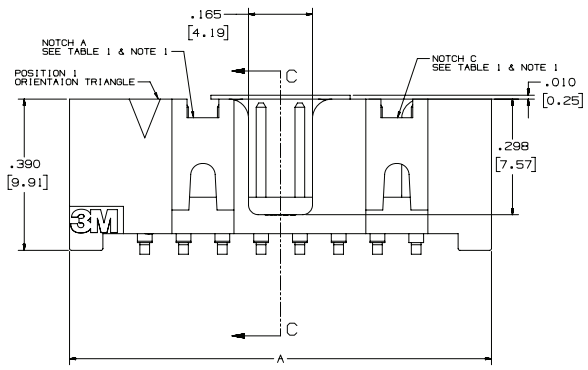

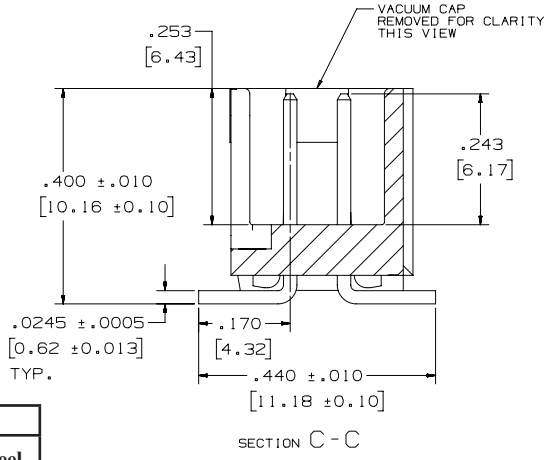

SECTION C - C

Table 1				
Pin Qty	Dimensions A	Dimensions B	Polarizing Notches	Tape and Reel PKG Code
6	0.588 (14.94)	0.508 (12.90)	B	WD (44 mm)
8	0.688 (17.48)	0.608 (15.44)	B	WD (44 mm)
10	0.788 (20.02)	0.708 (17.98)	BC	WD (44 mm)
14	0.988 (25.10)	0.908 (23.06)	BCDE	WD (44 mm)
16	1.088 (27.64)	1.008 (25.60)	ABCDE	WD (44 mm)
20	1.288 (32.72)	1.208 (30.68)	ABCDE	WE (56 mm)
24	1.488 (37.80)	1.408 (35.76)	ABCDE	WE (56 mm)
26	1.588 (40.34)	1.508 (38.30)	ABCDE	WE (56 mm)
30	1.788 (45.42)	1.708 (43.38)	ABCDE	WF (72 mm)
34	1.988 (50.50)	1.908 (48.46)	ABCDE	WF (72 mm)
36	2.088 (53.04)	2.008 (51.00)	ABCDE	WG (88 mm)
40	2.288 (58.12)	2.208 (56.08)	ABCDE	WG (88 mm)
50	2.788 (70.82)	2.708 (68.78)	ABCDE	WG (88 mm)
60	3.288 (83.52)	3.208 (81.48)	ABCDE	WH (120 mm)
64	3.488 (88.60)	3.408 (86.56)	ABCDE	WH (120 mm)

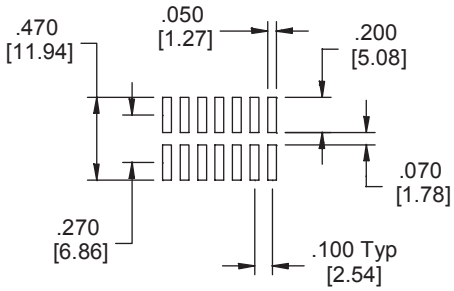

P.C. Board Foot Print

Notes:
1. Notches A & C will accommodate 3M Polarizing Key N3518.
2. Vacuum cap will be centered on connectors.
3. Coplanarity .004 for less than 30 position, .006 for 30 and above.

Ordering Information

N25XX - 6V0C - XX-XX

Prefix:
N = High Temp Black (PCT) (RB Plating Req'd)

Pin Quantity:
(See Table)

Plating:
RB = 30 µ" [0.76 µm] Gold with 200 µ" [5.08 µm] Matte Tin Solder Tails (RIA E1 & C1 apply)

Packaging Options:
WX = tape & reel packaging (see table 1)

3M
Electronic Solutions Division
Interconnect Solutions
http://www.3Mconnectors.com

3M is a trademark of 3M Company.
For technical, sales or ordering information call
800-225-5373

3M™ Four-Wall Header

.100” x .100” Low Profile, Accessories

2500 Series

Connector Pin Qty	Dimension A
6	N/A
8	N/A
10	.81 (20.6)
14	1.02 (25.9)
16	1.12 (28.4)
20	1.32 (33.5)
24	1.52 (38.7)
26	1.63 (41.4)
30	1.83 (46.4)
34	2.03 (51.6)
36	N/A
40	2.33 (59.2)
50	2.83 (71.9)
60	3.33 (84.6)
64	3.53 (89.7)

Part Number	Material	Color
3505-33B	Nylon	Black
3505-33	Nylon	Gray

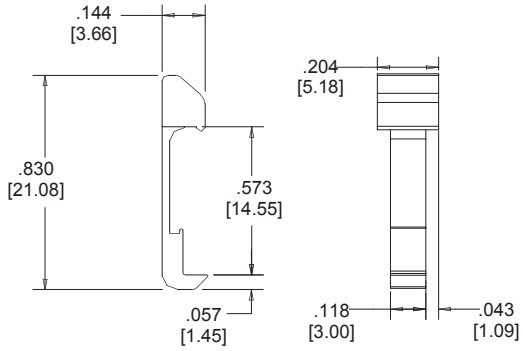

Note: Latches not compatible with reflow soldering. For reflow soldering, attach latches after soldering.

3505-8XXX

Connector Pin Count: (See Table)

Clip Height Code
0 = .31 [7.9] for Sockets W/O Strain Relief
1 = .53 [13.5] for Sockets with Strain Relief

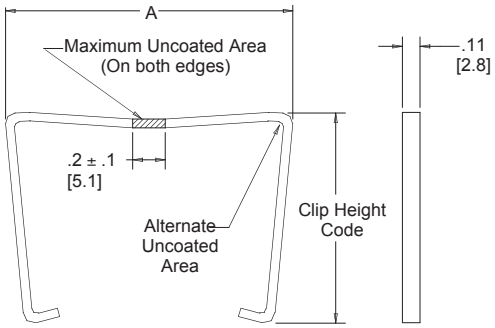

Short/Long Socket Retainer Clip

Note: Stainless steel with gray polyurethane coating.

Part Number	Material	Color
3201-3	PCT	Black
3201-1	PBT	Gray

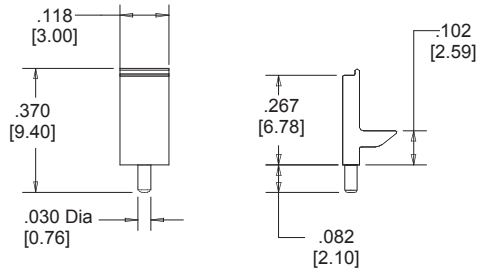

Polarizing Post

Part Number	Material	Color	Dim. A
N3518	LCP	Black	0.02
3518	PBT	Gray	0.02

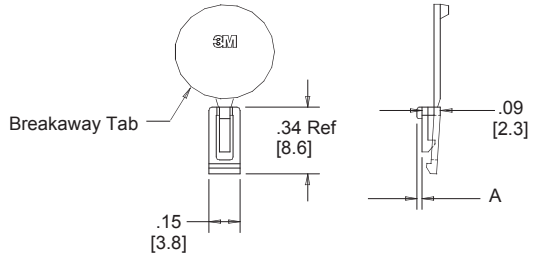

Polarizing Keys

TS-0770-L
Sheet 5 of 5

3M is a trademark of 3M Company.

For technical, sales or ordering information call
800-225-5373

Important Notice

All statements, technical information, and recommendations related to 3M's products are based on information believed to be reliable, but the accuracy or completeness is not guaranteed. Before using this product, you must evaluate it and determine if it is suitable for your intended application. You assume all risks and liability associated with such use. Any statements related to the product which are not contained in 3M's current publications, or any contrary statements contained on your purchase order shall have no force or effect unless expressly agreed upon, in writing, by an authorized officer of 3M.

Warranty; Limited Remedy; Limited Liability.

This product will be free from defects in material and manufacture for a period of one (1) year from the time of purchase. **3M MAKES NO OTHER WARRANTIES INCLUDING, BUT NOT LIMITED TO, ANY IMPLIED WARRANTY OF MERCHANTABILITY OR FITNESS FOR A PARTICULAR PURPOSE.** If this product is defective within the warranty period stated above, your exclusive remedy shall be, at 3M's option, to replace or repair the 3M product or refund the purchase price of the 3M product. **Except where prohibited by law, 3M will not be liable for any indirect, special, incidental or consequential loss or damage arising from this 3M product, regardless of the legal theory asserted.**

3M Electronics Solutions Division
6801 River Place Blvd.
Austin, TX 78726-9000
U.S.A.
1-800-225-5373
www.3m.com/interconnects

Please recycle. Printed in USA.
© 3M 2011. All rights reserved.
RIA-2217B-E

3M is a trademark of 3M Company.