TRIAD MAGNETICS

POWER TRANSFORMER
CHASSIS MOUNT : Autotransformer

N-6U

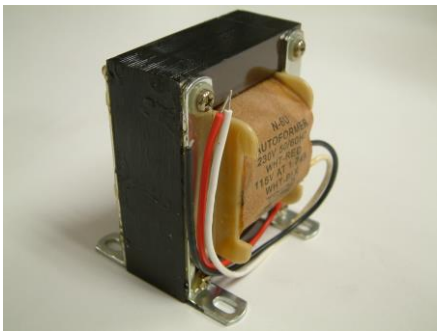

Electrical Specifications (@25°C)

1. Maximum Power: 200 VA
2. Input Voltage: 230 V, 50 / 60 Hz
3. Output Voltage: 115V ± 5%
4. Full Secondary Load: 1.70 Amps RMS

Description:

The N-6U is part of the line of Auto-Transformers that are single winding transformers in which the secondary coil is a fraction of the entire winding for voltage step-down. This causes part of the power to be transferred conductively through the windings, rather than all of the power being transferred by induction.

Safety:

These units are designed with 1500V isolation between the winding and the core. Materials and construction are rated for Class B insulation system.

Dimensions: Unit: In inches

A	B	C	D	E
3.375	2.812	2.812	2.250	2.250

Weight: 3.60 lbs
Mounting Holes: 0.203 x 0.375
Connections: 7.0±1" leads, 0.250±0.062" Skin & Tin

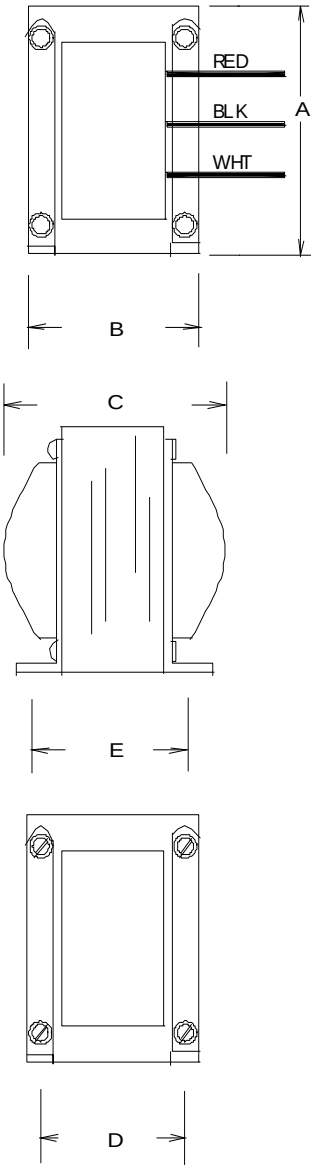

Schematic:

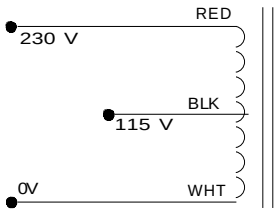

For 230V input: Wht to Red
For 115 output: Wht to Blk

RoHS Compliance: As of manufacturing date February 2005, all standard products meet the requirements of 2011/65/EU, known as the RoHS initiative.

* Upon printing, this document is considered "uncontrolled". Please contact Triad Magnetics' website for the most current version.

Web: www.TriadMagnetics.com
Phone 951-277-0757
Fax 951-277-2757

460 Harley Knox Blvd.
Perris, California 92571

Publish Date: May 11, 2015