User's Guide
SBOU087B–August 2010–Revised September 2016

Multi-Cal-System Evaluation Module

This user's guide describes the characteristics, operation, and the use of the Multi-Cal-System evaluation module (EVM). It covers all pertinent areas involved to properly use this EVM board. The document includes the physical printed circuit board layout, schematic diagrams, and circuit descriptions.

Contents

1 Overview 3
2 Starter System Setup 9
3 Expanding the System Size 22
4 Troubleshooting Tips 28
5 Bill of Materials 29

List of Figures

1 Hardware Included with the Multi-Cal-System EVM Kit 3
2 Multi-Cal-Slave Kit 4
3 Multi-Cal-Interface PCA Card 5
4 Multi-Cal-Test PCA Card 5
5 Multi-Cal-Interface Cable 6
6 Multi-Cal-Power Cable 6
7 Multi-Cal-System EVM Hardware Setup 9
8 Connect Multi-Cal-Master PCA to USB DAQ Platform 10
9 Connect Multi-Cal-Interface Cable to Multi-Cal-Master PCA Card 11
10 Connect Multi-Cal-Interface Cable to Multi-Cal-Interface PCA Card 11
11 Jumpers on Multi-Cal-Interface PCA Card 12
12 Jumpers on Multi-Cal-Test PCA Card 13
13 Connect Multi-Cal-Test PCA Card to Multi-Cal-Interface PCA Card 14
14 Connect Multi-Cal-Power Cable to Multi-Cal-Master PCA Card 15
15 Connect Multi-Cal-Power Cable to Power Supplies (Current Loop Output) 16
16 Connect Multi-Cal-Power-Cable to Power Supplies (Voltage Output) 17
17 Typical Instrument Connection 18
18 Connect Serial Port to DMM 19
19 Connect IEEE488 to DMM 20
20 Universal 9-V Supply to USB DAQ Platform 21
21 Connect USB Cable to USB DAQ Platform 21
22 Complete System Setup 22
23 Replace Standoffs 22
24 Connect the Ribbon Cable to the Master 23
25 Connect Slave Ribbon Cable to Slave 24
26 Secure Slave to Master 25
27 Cable Connections to Slave Board 26
28 Jumper Locations and Positions for Expanding System Size 27
29 Complete Expanded System 27

Microsoft, Windows are registered trademarks of Microsoft Corporation.
All other trademarks are the property of their respective owners.

Copyright © 2010–2016, Texas Instruments Incorporated

30 Communications Error Message 28
31 WIndows Device Manager: Active Human Interface Device Connection 28

List of Tables

1 Recommended Starter System 7
2 Additional Test Equipment Required 7
3 Mode Jumpers on the Multi-Cal-Test PCA 13
4 Jumper Bank Functions on the Multi-Cal-Test PCA 14
5 Multi-Cal-System EVM Board Parts List 29

Copyright © 2010–2016, Texas Instruments Incorporated

1 Overview

The Multi-Cal-System Evaluation Module is a set of EVMs that is used to calibrate multiple PGA308 and PGA309 sensor modules. The PGA308 and PGA309 are two programmable analog sensor signal conditioners. All components in the Multi-Cal-System can be expanded to calibrate up to 64 sensors simultaneously. For a more detailed description of the PGA308, please refer to the product data sheet (SBOS440) available from the Texas Instruments web site at http://www.ti.com. Additional support documents are listed in the section of this guide entitled *Related Documentation from Texas Instruments* .

The Multi-Cal-System Evaluation Module consists of two printed circuit boards (PCBs). One board (the USB DAQ Platform) generates the signals required to communicate with the Multi-Cal-System, which is the second board (Multi-Cal-Master PCA), as well as support and configuration circuitry. The complete Multi-Cal-System contains a series of PCBs, and can be expanded to meet your specific system requirements.

Throughout this document, the abbreviation *EVM* and the term *evaluation module* are synonymous with the Multi-Cal-System Evaluation Module.

1.1 Multi-Cal-System Hardware Options

Figure 1 shows the hardware included with the basic Multi-Cal-System kit. Contact the factory if any component is missing.

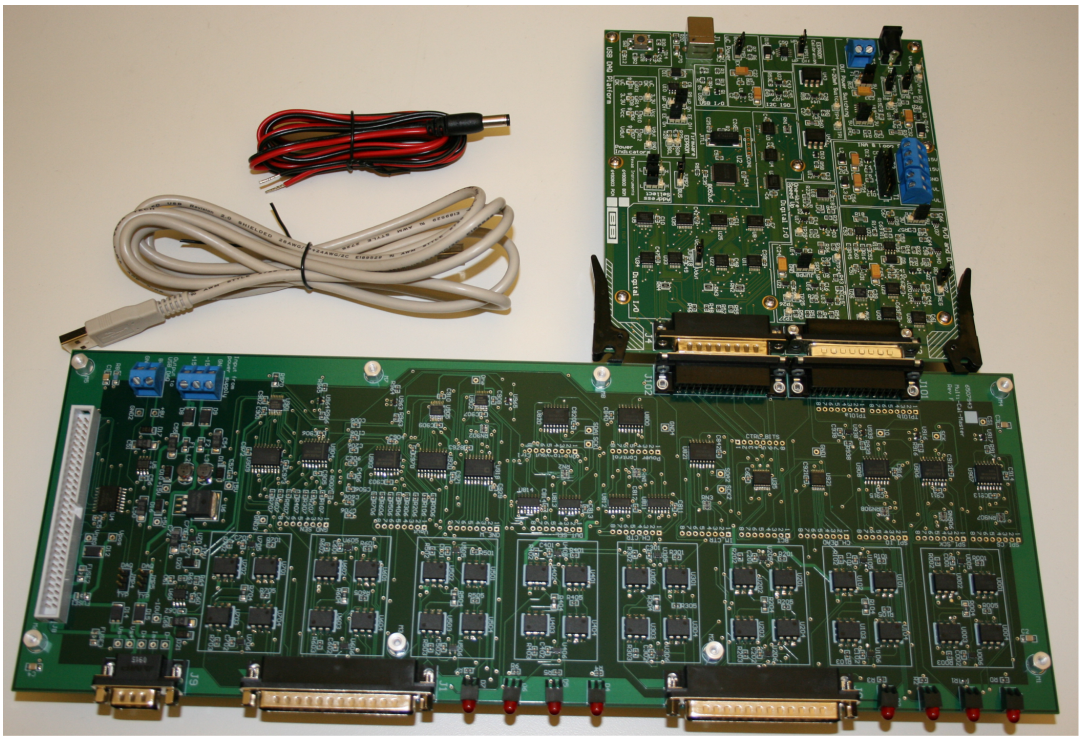

Figure 1. Hardware Included with the Multi-Cal-System EVM Kit

Copyright © 2010–2016, Texas Instruments Incorporated

The Multi-Cal-System EVM kit includes the following items:

- **Multi-Cal-System PCB:** This board multiplexes all the communication signals, sensor module output signals, and power.
- **USB DAQ Platform PCB:** This board connects to the USB port on your computer. It generates all the control signals and communication signals for the Multi-Cal-System.
- **USB cable:** Connects your computer to the USB DAQ Platform PCB; it is an A-Male to B-Male USB cable.
- **DC Power Cable:** Allows external supply of $+6V_{dc}$ to $+9V_{dc}$ to be connected to J5 on the USB-DAQ Controller board. Note: Power may also be applied to T3. **Observe correct polarity of power supply connections!**

Figure 2 shows the Multi-Cal-Slave kit. Each Multi-Cal-Slave kit enables you to expand the system by eight channels. For example, a Multi-Cal-Master kit and one Multi-Cal-Slave kit combine to form a 16-channel system. Seven Multi-Cal-Slave boards and a single Multi-Cal-Master combine to form a 64-channel system.

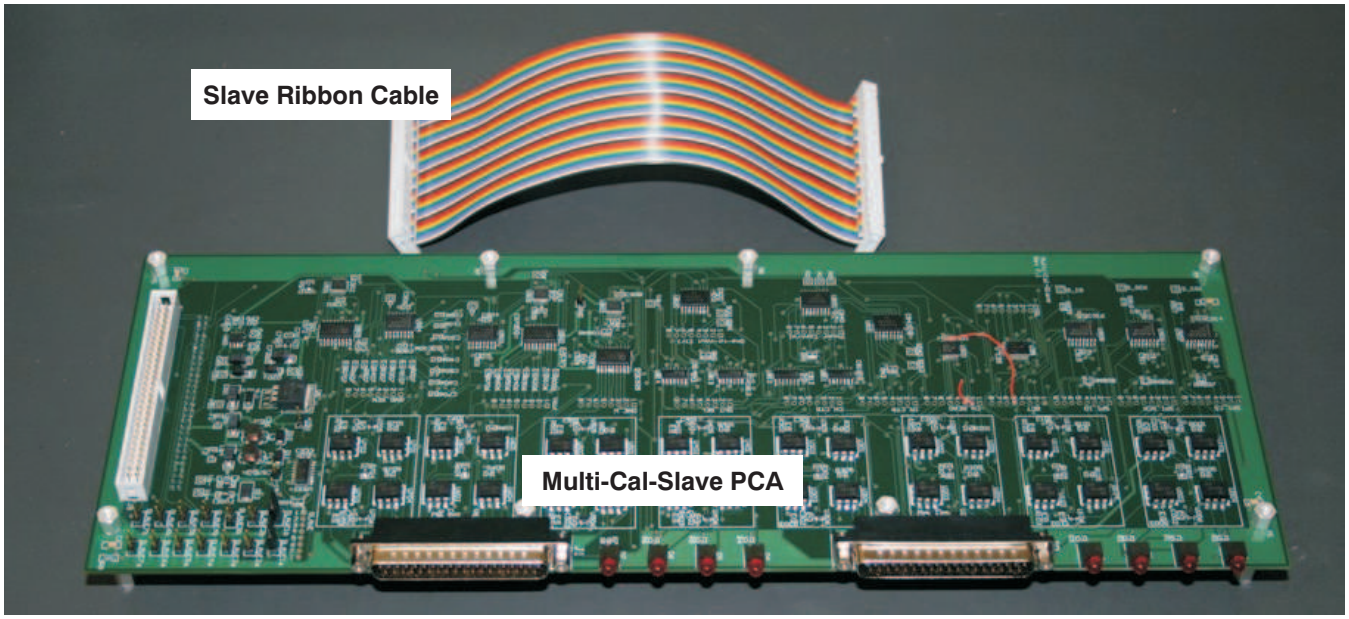

Figure 2. Multi-Cal-Slave Kit

The Multi-Cal-Slave kit contains these items:

- **Multi-Cal-Slave PCB:** The slave board adds eight measurement channels to the system. The slave board is almost identical to the master board. The primary difference between the master and the slave is that the master connects to the USB DAQ Platform and the slave connects to the master via a ribbon cable, as shown in Figure 2.
- **Slave Ribbon cable:** The Slave Ribbon cable connects all the signals and power from the master to the slave. Note that power is distributed across several wires to minimize loss.

Figure 3 shows the Multi-Cal-Interface PCA card. The Multi-Cal-Interface can be used to connect the sensor modules to the system. The Multi-Cal-Test boards can also be connected to this board. The Multi-Cal-Interface board connects to the master or slave via the Multi-Cal-Interface cable on the 37-pin DSUB connectors.

Copyright © 2010–2016, Texas Instruments Incorporated

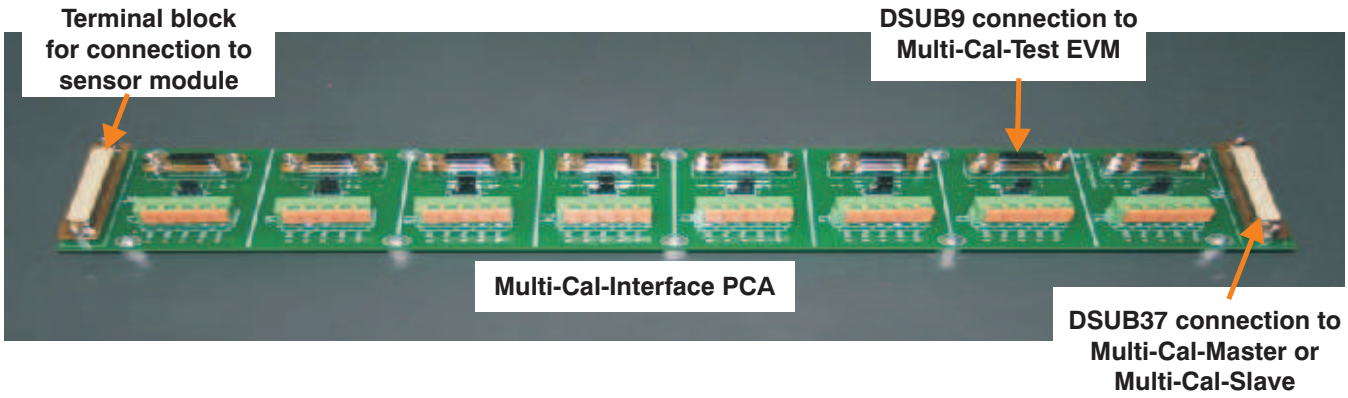

Figure 3. Multi-Cal-Interface PCA Card

Figure 4 shows the Multi-Cal-Test PCA card. The Multi-Cal-Test card contains a PGA308 with associated electronics, jumpers for mode configuration, and a sensor emulator. The equivalent PGA309 test board does not exist at the time of this writing; it is currently under development. The Multi-Cal-Test board can be used to verify that the system is functional before connecting your sensor modules. The Multi-Cal-Test PCA can also be used to demonstrate the accuracy capability of the system. The Multi-Cal-Test PCA is also a good tool for learning how to use the system.

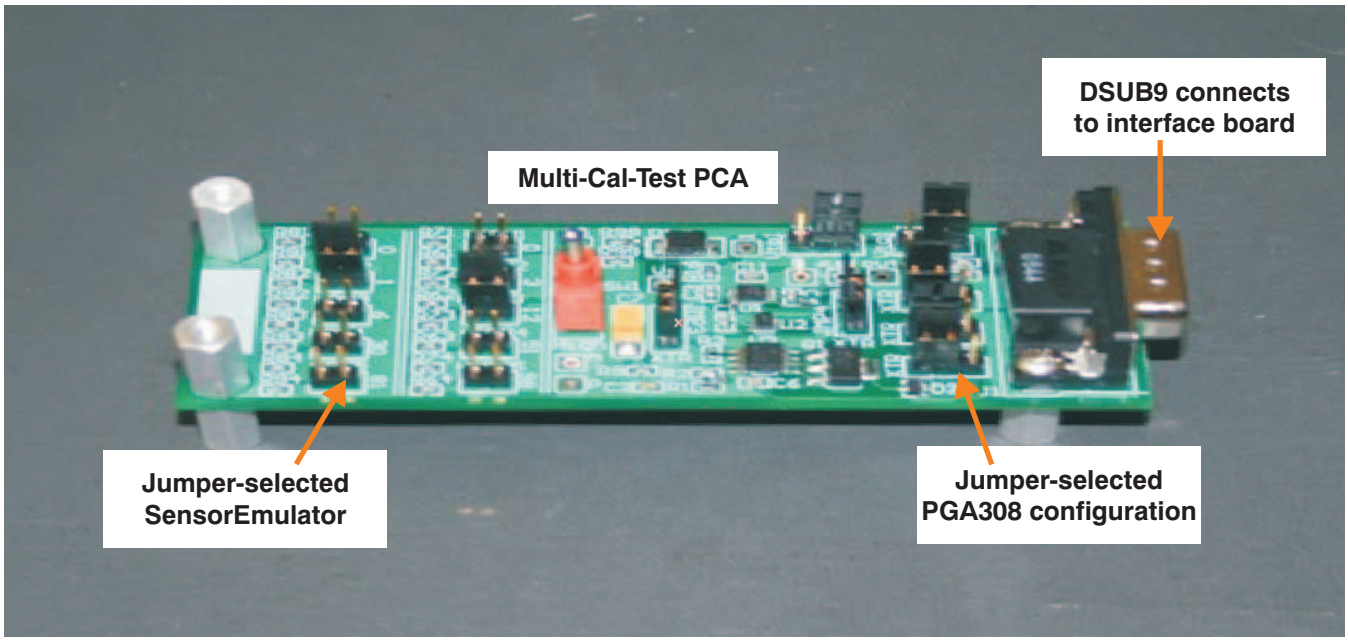

Figure 4. Multi-Cal-Test PCA Card

Copyright © 2010–2016, Texas Instruments Incorporated

Figure 5 shows the Multi-Cal-Interface cable. The Multi-Cal-Interface cable connects the Multi-Cal-Master or Multi-Cal-Slave to the Interface board.

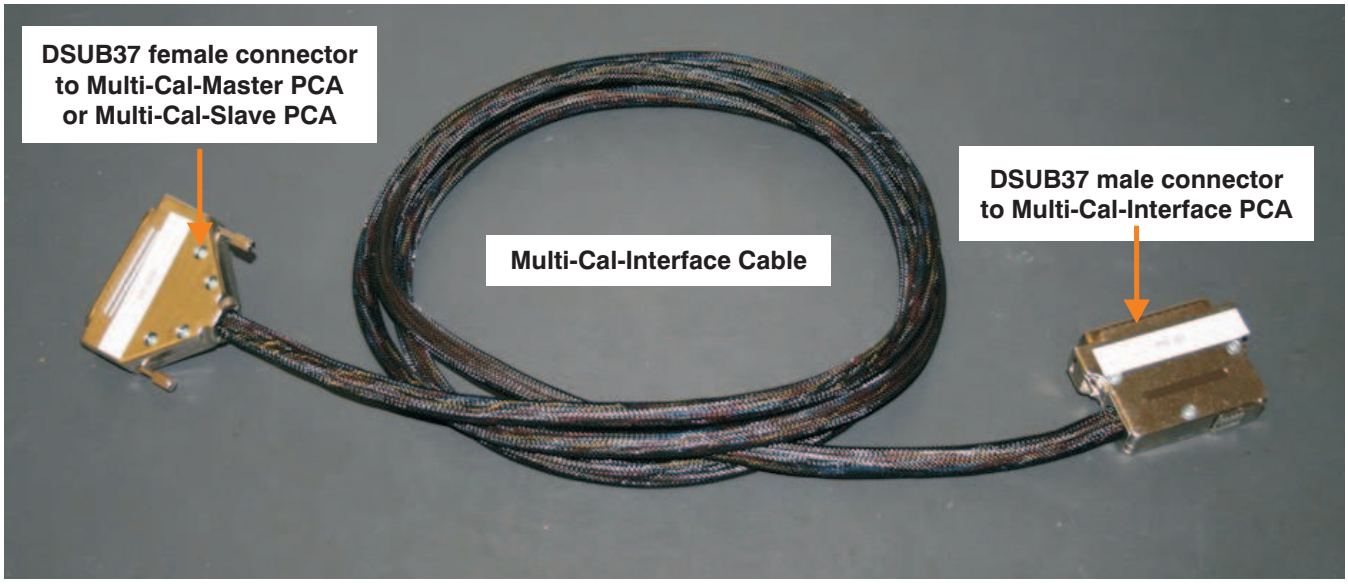

Figure 5. Multi-Cal-Interface Cable

Figure 6 shows the Multi-Cal-Power cable. The Multi-Cal-Power cable connects the power supplies and a digital multimeter (DMM) to the Multi-Cal-Master PCA card.

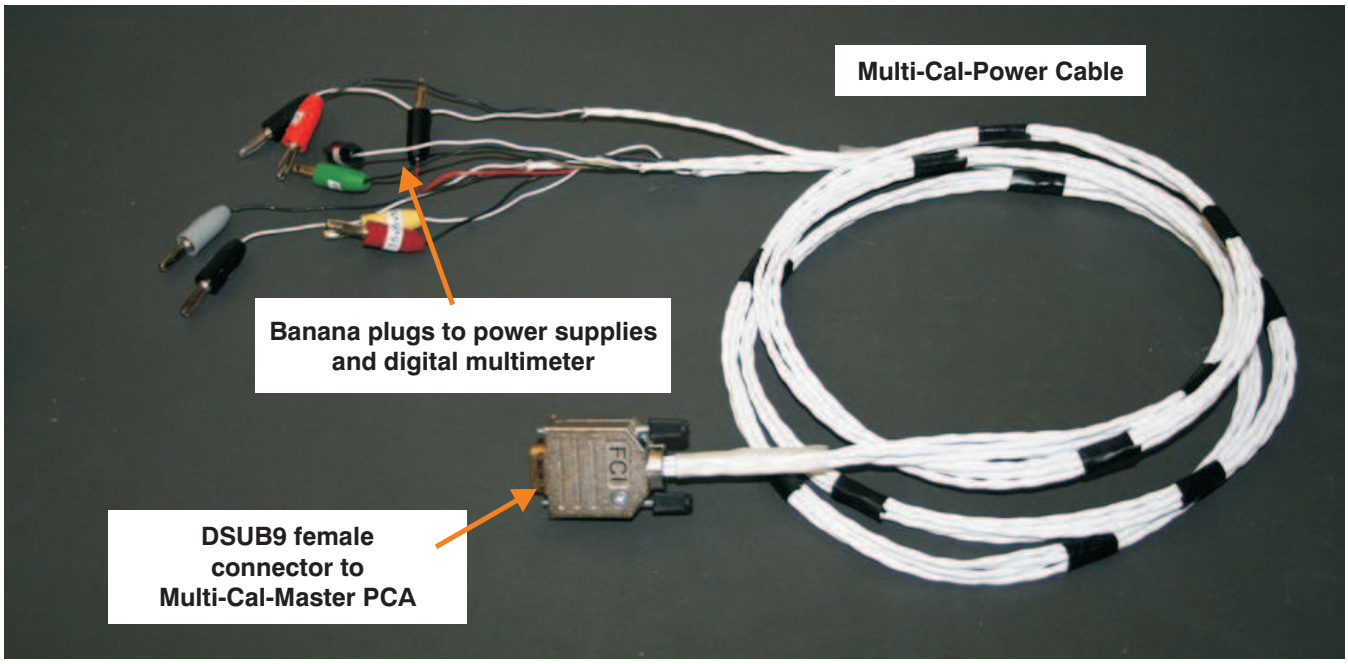

Figure 6. Multi-Cal-Power Cable

Copyright © 2010–2016, Texas Instruments Incorporated

1.2 Recommended Starter System

The Multi-Cal-System basic *starter kit* is an eight-channel system for calibrating PGA308 and PGA309 sensor modules automatically. The basic starter kit allows you to verify that the Multi-Cal-System meets your specific application requirements. You can expand the capacity of your system later by adding slave boards. Each slave board adds another eight channels, for a maximum system capability of 64 channels (one master and seven slave boards). Table 1 describes the basic starter kit and lists the quantities of each board supplied.

Table 1. Recommended Starter System

Quantity	Name	Comments
1	Multi-Cal-Master EVM	This basic board gives you eight channels.
2	Multi-Cal-Interface cable	You may choose to build your own cable because of cable length requirements. The construction of the cable is given in the Multi-Cal System Cable user's guide (SBOU092).
1	Multi-Cal-Power cable	You may choose to build your own cable because of cable length requirements. The construction of the cable is given in the Multi-Cal System Cable user's guide (SBOU092).
1	Multi-Cal-Interface EVM	Depending on the mechanical requirements of your specific system, you may develop your own interface board.
2	Multi-Cal-Test EVM[(1)]	Two Multi-Cal-Test EVMs allow you to check two channels. This option is typically enough for initial evaluation of the system. Eight units would allow you to fully test all eight channels of the starter system.

(1) The Multi-Cal-Test EVM board uses the PGA308. The equivalent PGA309 test board does not exist at the time of this writing; it is currently under development.

There are also several additional pieces of test equipment required; Table 2 summarizes this equipment.

Table 2. Additional Test Equipment Required

Name	Comments
±15V Supply	This is power for the multiplexers on the Multi-Cal-Master board. This supply can range from ±12 V to ±16 V. Choose a low-noise linear supply for best performance. This supply also powers slave boards if you expand the system in the future. Keep in mind the current output capability. Current requirement for Master = 150 mA Current for each Slave = 150 mA Example: For eight channels and one master = 150 mA Example: For 64 channels (one master and seven slaves) = 8 x 150 mA = 1.2 A
Loop or DUT Power Supply	This supply can range from 5V to 40V, depending on your sensor module requirements. This power will be directly connected to the sensor modules. Choose a low-noise linear supply for best performance. Keep in mind the current output capability. All sensor modules are powered simultaneously, so multiply the number of channels by the expected device current to determine the requirements. Example: For eight current loop modules: Assume that maximum current = 25mA (overcurrent range); 8 x 25 mA = 20 0mA Example: For 64 current loop modules: 64 x 25 mA = 1.6 A
Precision Digital Multimeter	Must allow for software control through RS-232 or IEEE488. Suggested instrument is the Agilent 34401A.
GPIB-USB-HS	This controller is not required if you are using RS-232 control. This item is a National Instruments IEEE488 controller. It allows you to connect your computer to the precision multimeter for automatic control.

Copyright © 2010–2016, Texas Instruments Incorporated

Table 2. Additional Test Equipment Required (continued)

Name	Comments
RS-232 Cable	This cable is not required if you are using IEE488 control. This cable allows you to connect your computer to the precision multimeter for automatic control. Review the documentation for your precision DMM for more information on the RS-232 cable. This document gives a description of the cable required for the Agilent 34401A.
$+6V_{dc}$ to $+9V_{dc}$ 3A Power Supply	Power for USB-DAQ. Use included cable to J5 or may use wires to T3.

1.3 Related Documentation from Texas Instruments

The following document provides information regarding Texas Instruments integrated circuits used in the assembly of the Multi-Cal-System EVM. This user's guide is available from the TI website under literature number SBOU087. Any letter appended to the literature number corresponds to the document revision that is current at the time of the writing of this document. Newer revisions may be available from the TI web site at http://www.ti.com/, or call the Texas Instruments Literature Response Center at (800) 477-8924 or the Product Information Center at (972) 644-5580. When ordering, identify the document by both title and literature number.

Document	Literature Number
PGA308 Product Data Sheet	SBOS440
USB DAQ Platform Users Guide	SBOU056
Multi-Cal-Test EVM User's Guide	SBOU088
Multi-Cal-Master EVM User's Guide	SBOU089
Multi-Cal-System Cable User's Guide	SBOU092
Multi-Cal-Slave EVM User's Guide	SBOU094
Multi-Cal-Interface User's Guide	SBOU093

1.4 Information About Cautions and Warnings

This document contains caution statements.

CAUTION

This is an example of a caution statement. A caution statement describes a situation that could potentially damage your software or equipment.

The information in a caution or a warning is provided for your protection. Please read each caution carefully.

1.5 Applications Questions

If you have questions about this or other Texas Instruments evaluation modules, post a question in the *Amplifiers* forum at http://e2e.ti.com. Include in the subject heading the product in which you are interested.

Copyright © 2010–2016, Texas Instruments Incorporated

2 Starter System Setup

Figure 7 shows the system setup for the Multi-Cal-System EVM. The PC runs software that communicates with the USB-DAQ-Platform. The USB-DAQ-Platform generates the digital signals used to communicate with the Multi-Cal-System EVM.

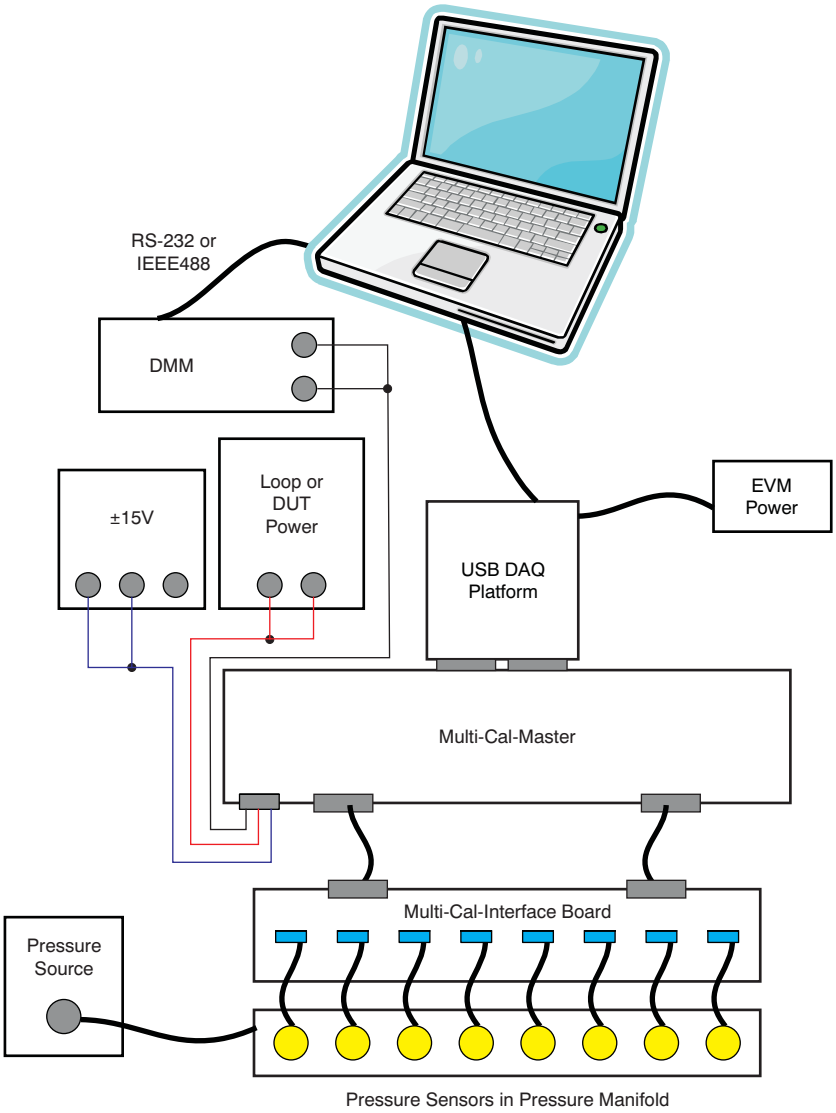

Figure 7. Multi-Cal-System EVM Hardware Setup

2.1 Electrostatic Discharge Warning

Many of the components on the Multi-Cal-System EVM are susceptible to damage by electrostatic discharge (ESD). Customers are advised to observe proper ESD handling precautions when unpacking and handling the EVM, including the use of a grounded wrist strap at an approved ESD workstation.

CAUTION

Failure to observe ESD handling procedures may result in damage to EVM components.

Copyright © 2010–2016, Texas Instruments Incorporated

2.2 Multi-Cal-System Hardware Setup for Recommended Starter Kit

Figure 8 shows how to connect the Multi-Cal-Master board to the USB DAQ Platform board. The best (and easiest) way to connect the two components is to gently push on both sides of the DSUB connectors. Make sure that the two connectors are completely pushed together; loose connections may cause intermittent EVM operation.

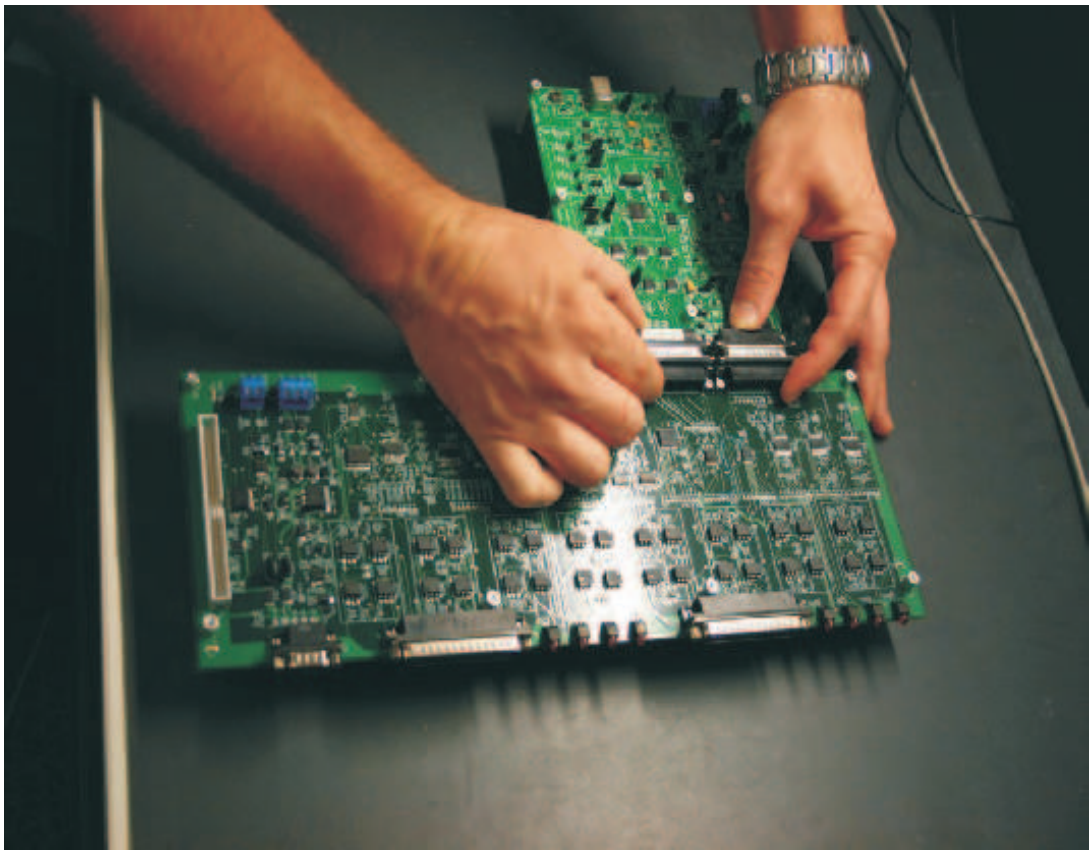

Figure 8. Connect Multi-Cal-Master PCA to USB DAQ Platform

Copyright © 2010–2016, Texas Instruments Incorporated

Figure 9 illustrates how to connect the Multi-Cal-Interface cable to the Multi-Cal-Master PCA card. It is important to make sure that the connector is not angled or crooked, and that the screws are fully tightened. Improperly seated connectors are a common cause of intermittent unit failure.

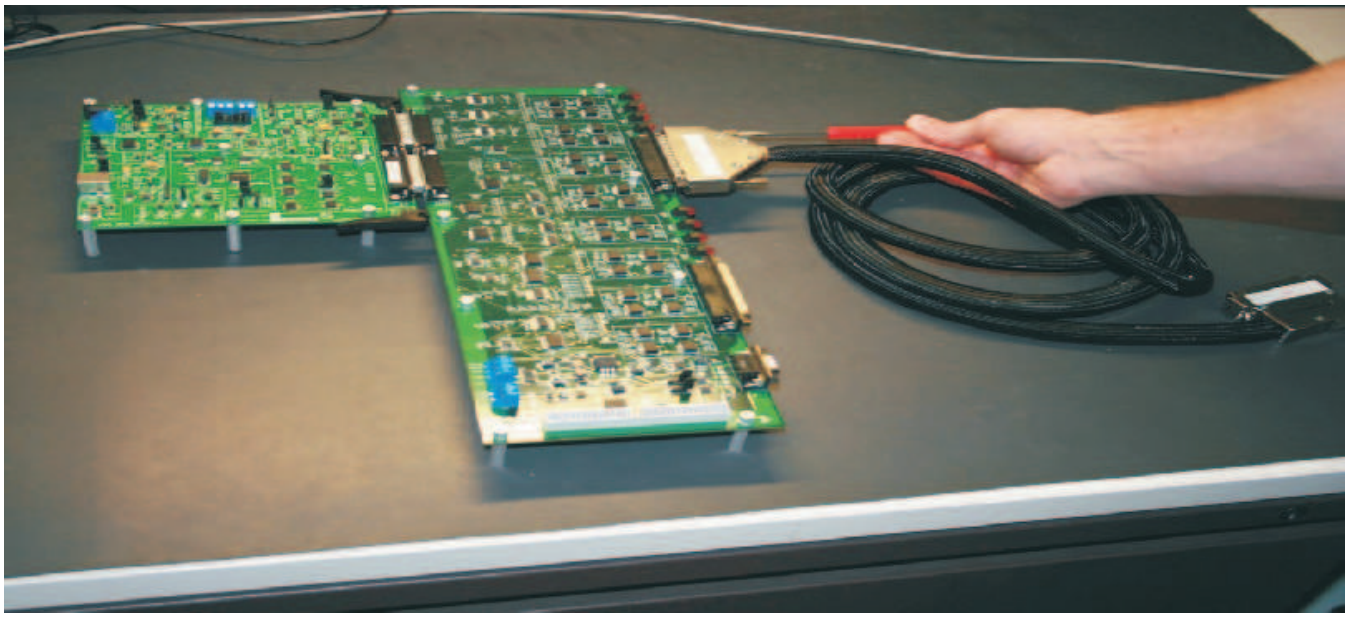

Figure 9. Connect Multi-Cal-Interface Cable to Multi-Cal-Master PCA Card

Figure 10 shows how the Multi-Cal-Interface cable connects to the Multi-Cal-Interface PCA. Again, it is important to make sure that the connector is not misaligned or crooked, and that the screws are fully tightened. Improperly seated connectors are a common cause of intermittent device failure. Make sure that you connect J1 of the Multi-Cal-Master PCA card to P1 of the Multi-Cal-Interface PCA card. When this step is complete, repeat the process for the other connector (J0 and P0). It is a good idea to attach labels to the cable connectors to indicate which connector it is associated with.

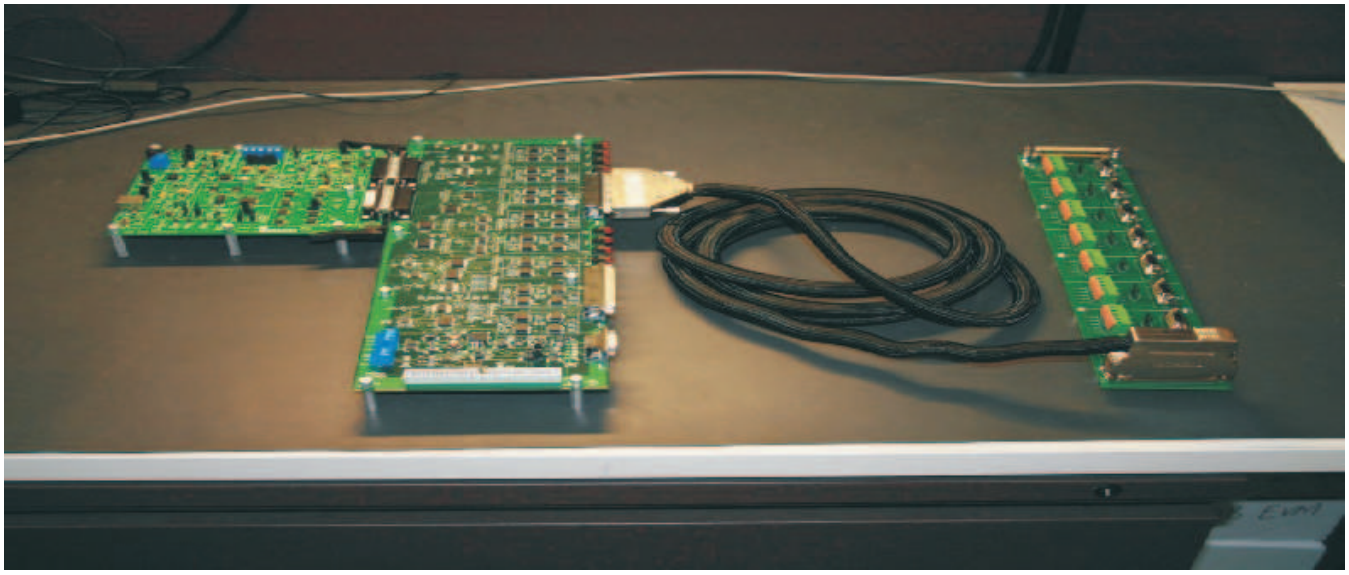

Figure 10. Connect Multi-Cal-Interface Cable to Multi-Cal-Interface PCA Card

Copyright © 2010–2016, Texas Instruments Incorporated

Figure 11 shows the jumper setup on Multi-Cal-Interface PCA. The Multi-Cal-Interface PCA has eight jumpers that allow you to choose between current mode sensor modules (for example, 4 mA to 20 mA) and voltage mode sensor modules (such as 0-V to 5-V output). Place all jumpers in the *V* position for voltage mode; alternatively, place all jumpers in the *I* position for current mode.

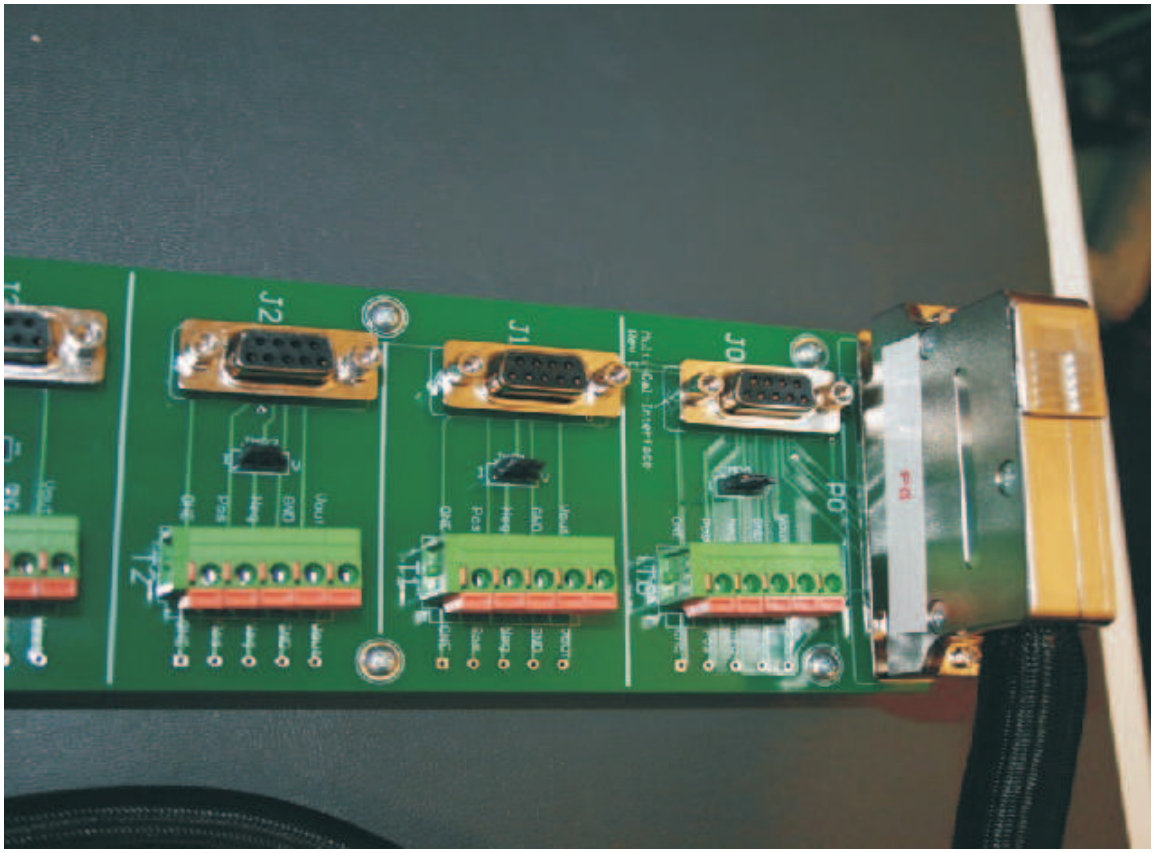

Figure 11. Jumpers on Multi-Cal-Interface PCA Card

Copyright © 2010–2016, Texas Instruments Incorporated

Figure 12 illustrates the jumper setup on Multi-Cal-Test PCA card. The Multi-Cal-Test PCA has seven jumpers that allow you to choose between three different modes of operation (current output, four-wire voltage output, and three-wire voltage output). The Multi-Cal-Test PCA card also has two banks of jumpers that select the *sensor-emulator* output on the test board.

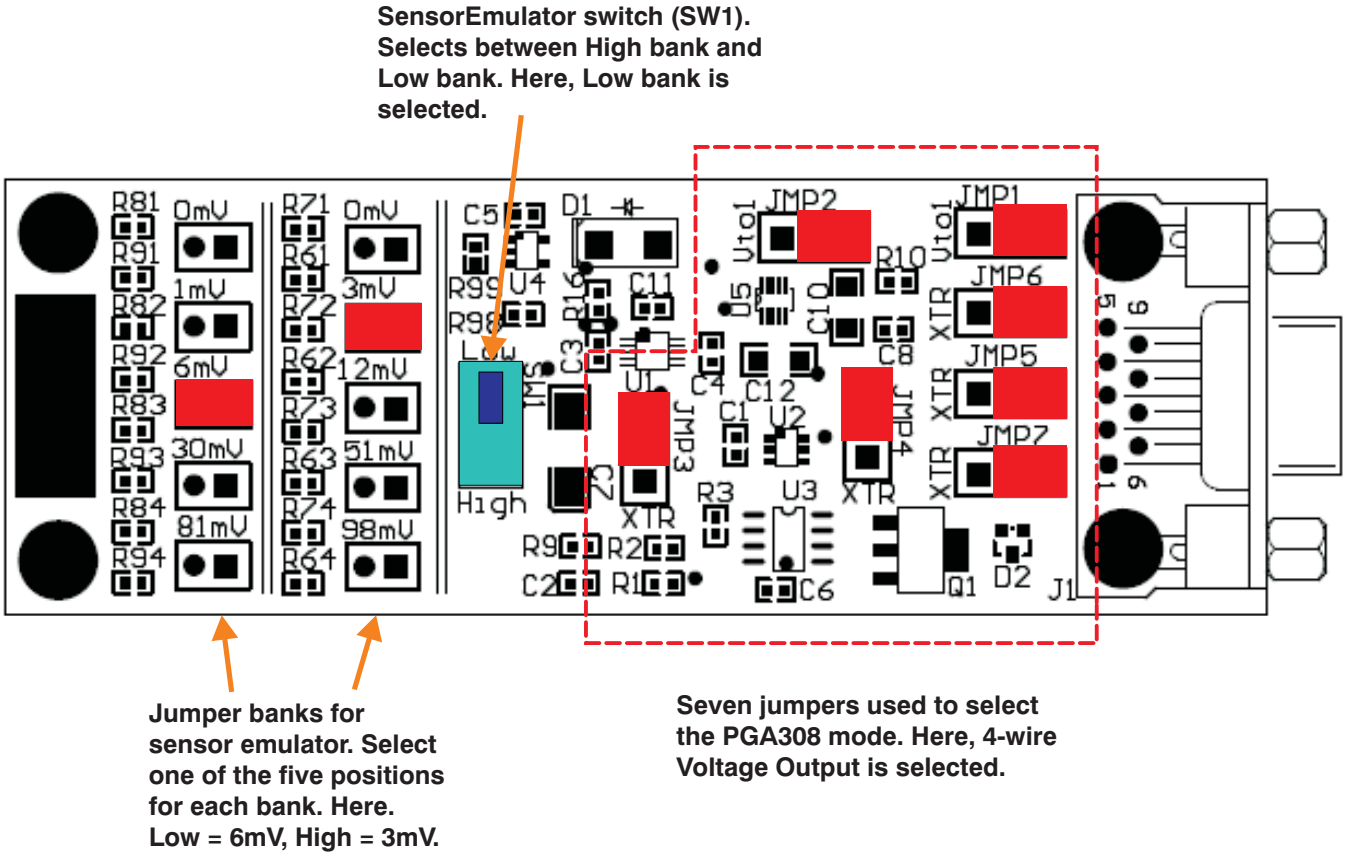

Figure 12. Jumpers on Multi-Cal-Test PCA Card

Table 3 and Table 4 explain how to set the jumpers on the Multi-Cal-Test PCA and the respective jumper functions. The test board allows all for the operation of the three modes of the PGA308 device. The test board also has a jumper-selected sensor-emulator. The sensor-emulator creates an input signal for the PGA308 so that you can perform an example calibration.

Table 3. Mode Jumpers on the Multi-Cal-Test PCA

Mode	Jumper Positions
Current Output	JMP1 = Position without label JMP2 = Position without label JMP3 = XTR JMP4 = XTR JMP5 = XTR JMP6 = XTR JMP7 = XTR
4-Wire Voltage Output	JMP1 = Position without label JMP2 = Position without label JMP3 = Position without label JMP4 = Position without label JMP5 = Position without label JMP6 = Position without label JMP7 = Position without label

Copyright © 2010–2016, Texas Instruments Incorporated

Table 3. Mode Jumpers on the Multi-Cal-Test PCA (continued)

Mode	Jumper Positions
3-Wire Voltage Output	JMP1 = Vto1 JMP2 = Vto1 JMP3 = Position without label JMP4 = Position without label JMP5 = Position without label JMP6 = Position without label JMP7 = Position without label

Table 4. Jumper Bank Functions on the Multi-Cal-Test PCA

Jumper Banks	Function
HIGH1 = 0 mV HIGH2 = 3 mV HIGH3 = 12 mV HIGH4 = 51 mV HIGH5 = 98 mV	Place the jumper shorting unit on one of these five positions. This jumper bank determines the sensor-emulator output when the switch (SW1) is in the HIGH position. The output of the sensor emulator is the input to the PGA308. For example, when the shorting unit is in the *HIGH2* position, the PGA308 input signal is 3 mV.
LOW1 = 0 mV LOW2 = 1 mV LOW3 = 6 mV LOW4 = 30 mV LOW5 = 81 mV	Place the jumper shorting unit on one of these five positions. This jumper bank determines the sensor-emulator output when the switch (SW1) is in the LOW position. The output of the sensor emulator is the input to the PGA308. For example, when the shorting unit is in the *LOW3* position, the PGA308 input signal is 6 mV.

Figure 13 shows how to connect the Multi-Cal-Test PCA to the Multi-Cal-Interface PCA. The Multi-Cal-Test PCA demonstrates the capability of the Multi-Cal-System. You can test the accuracy and repeatability of programmed modules using the Multi-Cal-Test PCA. The Multi-Cal-Test PCA is also helpful in learning how to use the system. Another purpose for the Multi-Cal-Test PCA is to verify that your system is fully functional before testing your product.

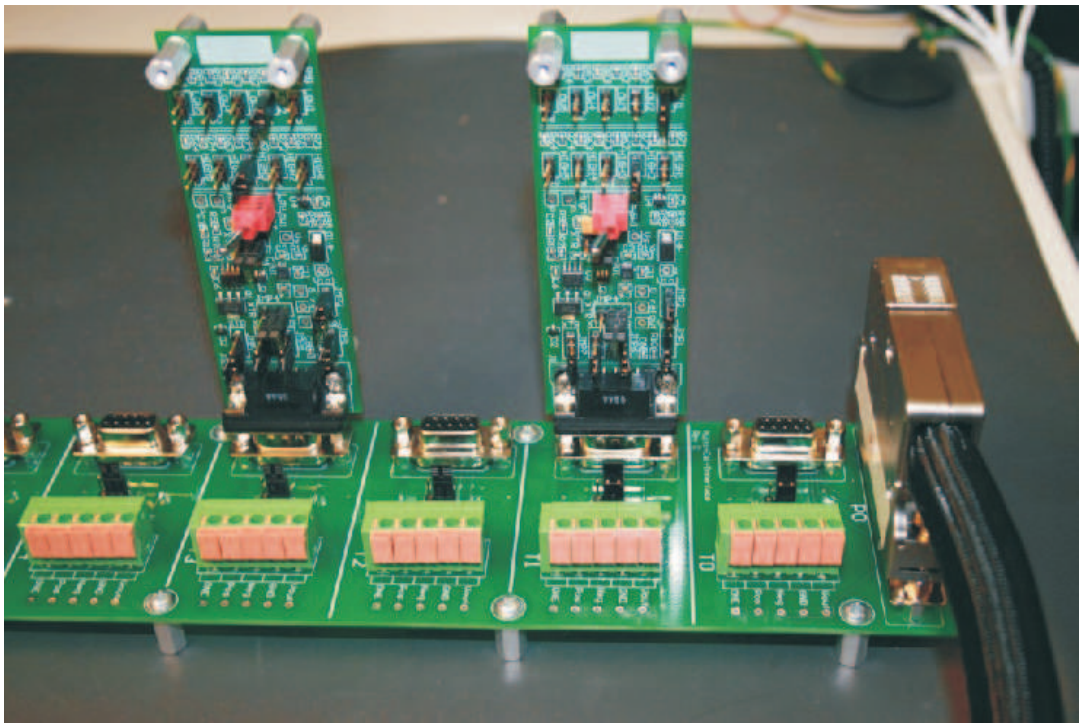

Figure 13. Connect Multi-Cal-Test PCA Card to Multi-Cal-Interface PCA Card

Copyright © 2010–2016, Texas Instruments Incorporated

Figure 14 shows how to connect the Multi-Cal-Power cable to the Multi-Cal-Master PCA card. Make sure that the cable is properly seated and fully screwed in.

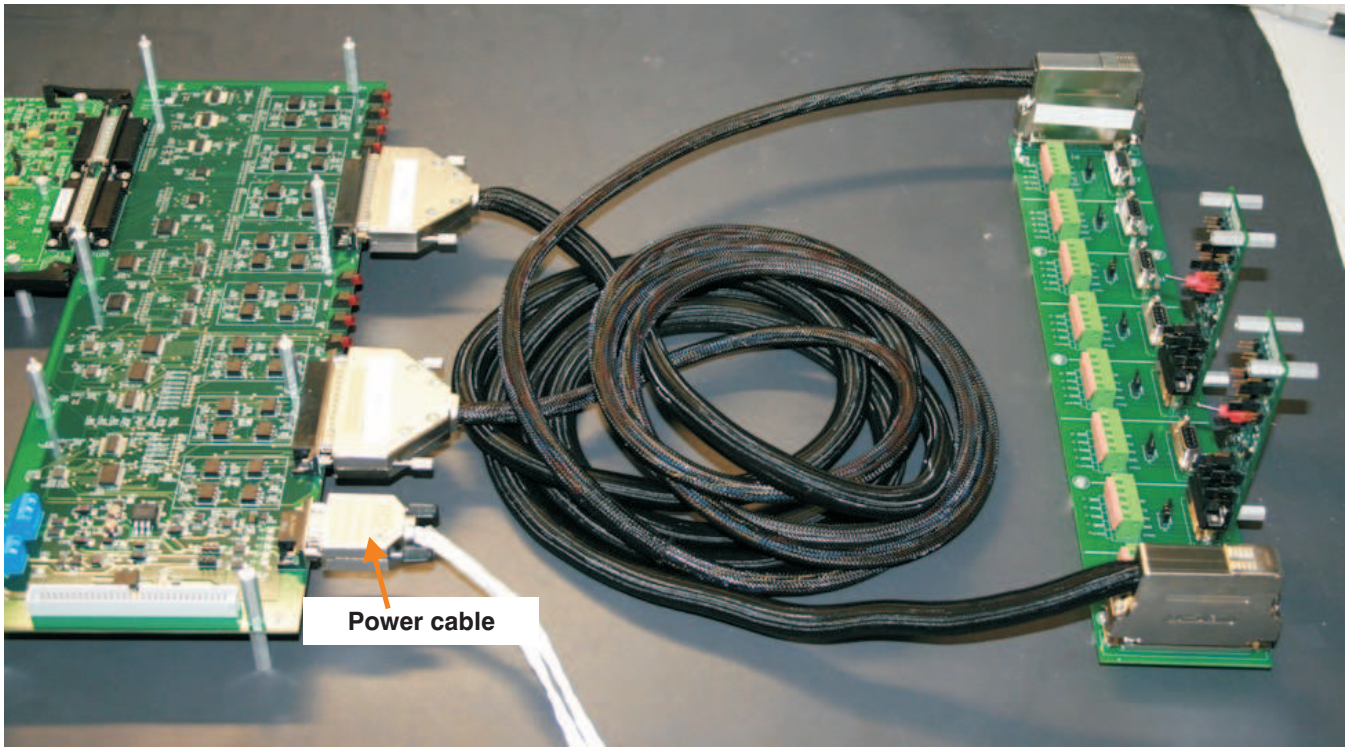

Figure 14. Connect Multi-Cal-Power Cable to Multi-Cal-Master PCA Card

Copyright © 2010–2016, Texas Instruments Incorporated

Figure 15 shows how to connect the Multi-Cal-Power cable to power supplies and to the DMM. This connection is for current loop output sensor modules. Refer to Table 3 for an illustration of how to set the jumpers on the Multi-Cal-Test PCA for current loop configuration.

NOTE: It is very important that the device power supply is floating. In other words, the negative terminal on the device power supply is not connected to GND on the ±15-V supply. Also, this supply should not be referenced to earth ground.

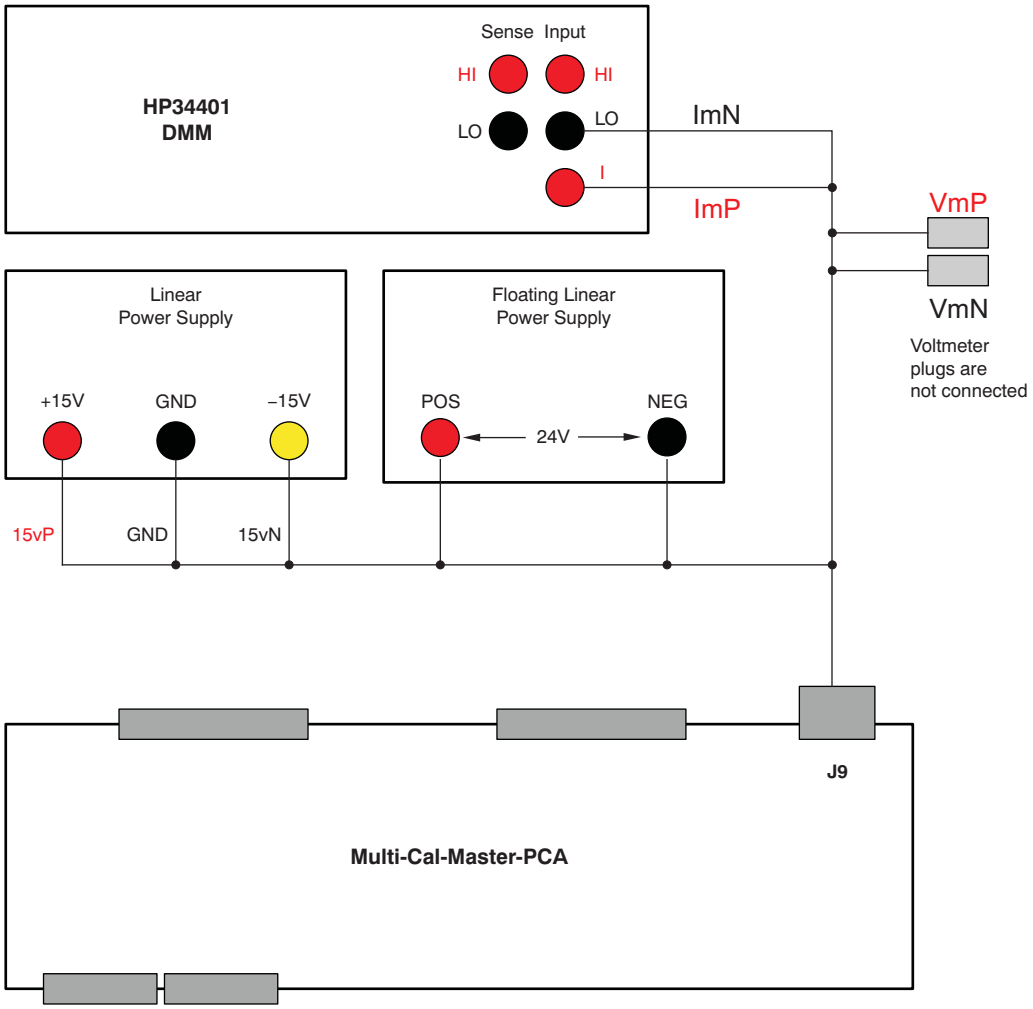

Figure 15. Connect Multi-Cal-Power Cable to Power Supplies (Current Loop Output)

Copyright © 2010–2016, Texas Instruments Incorporated

Figure 16 shows how to connect the Multi-Cal-Power cable to power supplies and to the DMM. This connection is for voltage output modules (that is. three-wire and four-wire connections). See Table 3 for information on how to set the jumpers on the Multi-Cal-Test PCA for current loop configuration.

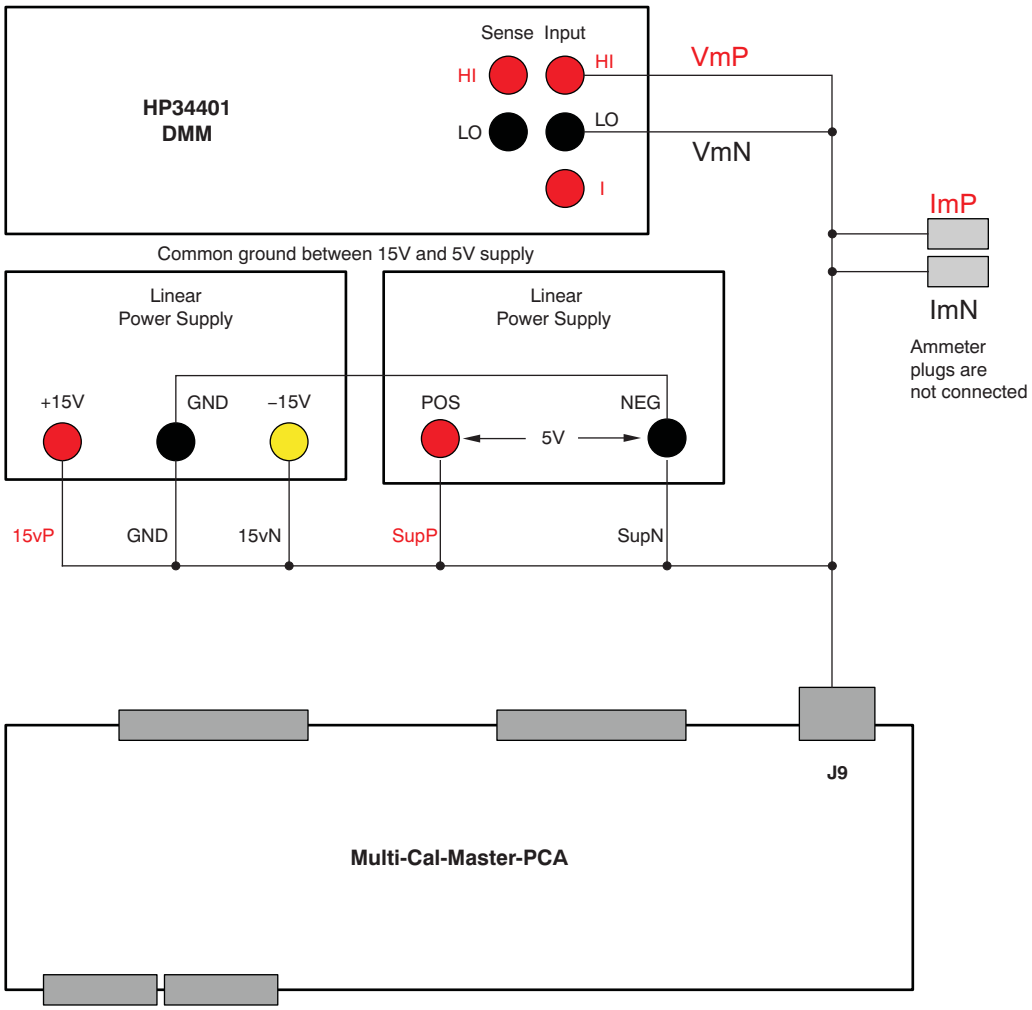

Figure 16. Connect Multi-Cal-Power-Cable to Power Supplies (Voltage Output)

Copyright © 2010–2016, Texas Instruments Incorporated

Figure 17 shows a photograph of typical power supply and DMM connections. It is recommended to tie back the two banana jacks that are not connected.

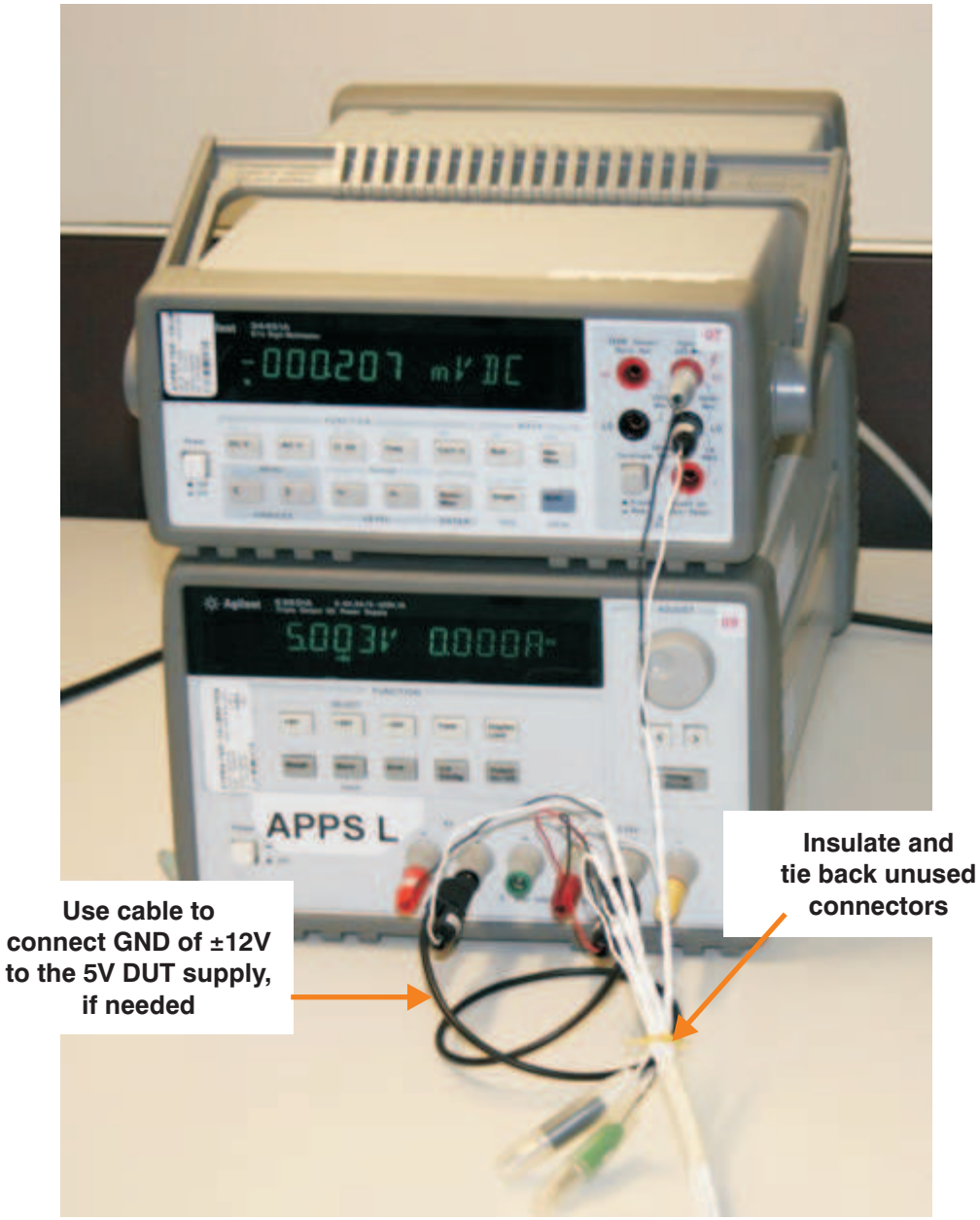

Figure 17. Typical Instrument Connection

Copyright © 2010–2016, Texas Instruments Incorporated

Figure 18 shows connection to the serial port of the DMM for communication. This connection is used in order to have remote control of the instrument. The other end of the cable is connected to the serial port on your computer. In order to use this capability, you must set the DMM to RS-232 mode. An optional way to communicate with the DMM is via the IEEE488 card.

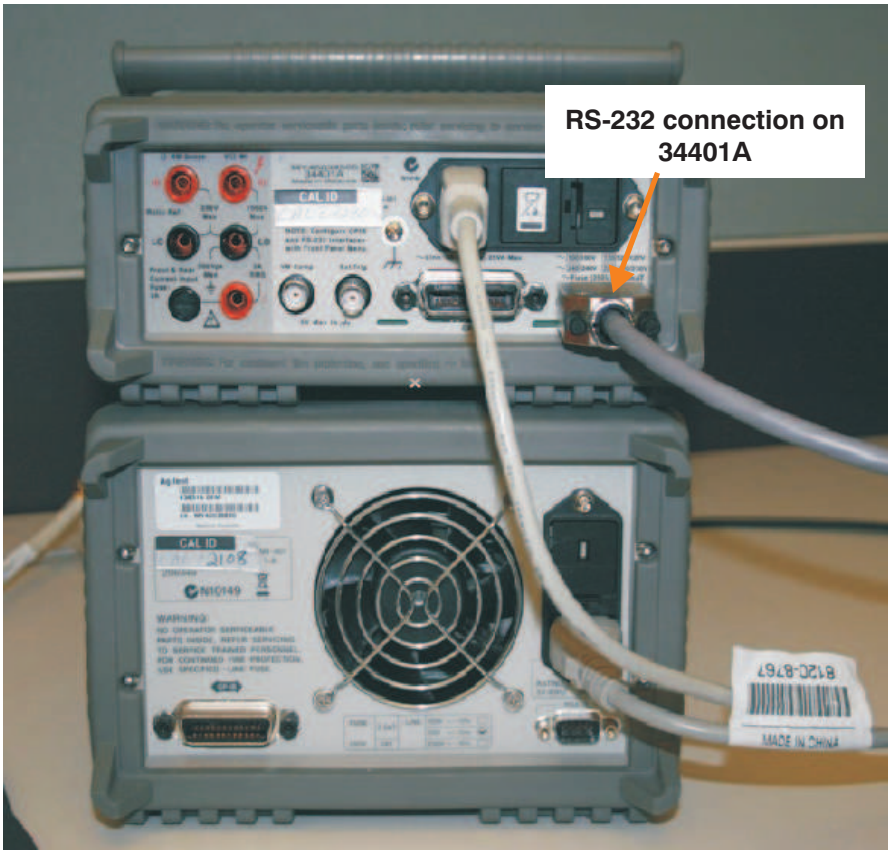

Figure 18. Connect Serial Port to DMM

Copyright © 2010–2016, Texas Instruments Incorporated

Figure 19 shows how to connect the IEEE488 to the DMM. The software for the Multi-Cal-System requires the National Instruments GPIB-USB-HS. This option is also used for remote control of the instrument. In order to use this capability, you must set the DMM to IEEE488 mode, and set the address according to the control script (default = 3). An optional way to communicate with the DMM is through the RS-232 port on your computer.

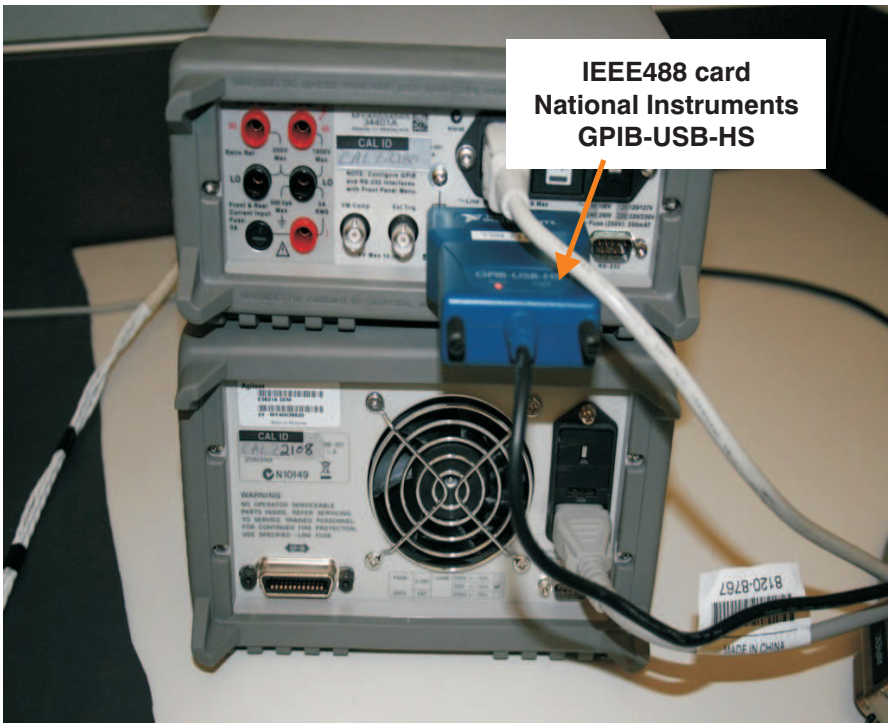

Figure 19. Connect IEEE488 to DMM

Copyright © 2010–2016, Texas Instruments Incorporated

Figure 20 shows the connection of the 9-V power supply to the USB DAQ Platform. When you connect power, three LEDs on the USB DAQ Platform illuminate. If the LEDs do not illuminate, check the power connections.

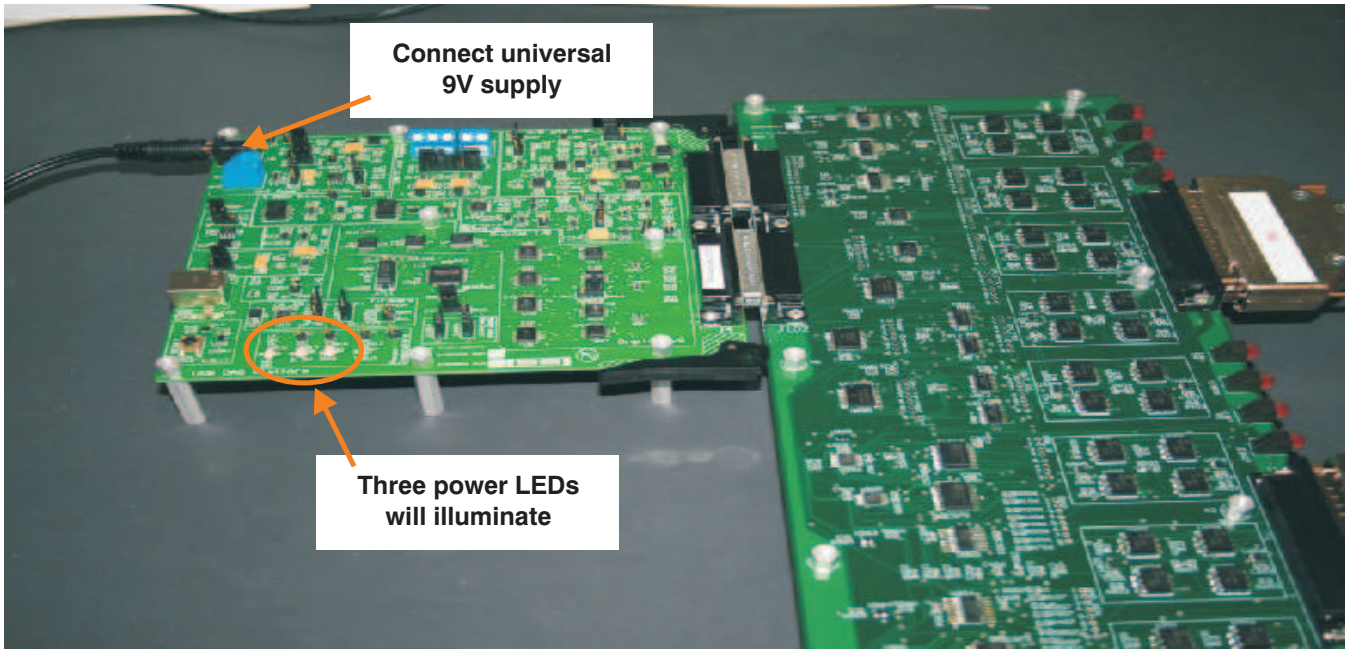

Figure 20. Universal 9-V Supply to USB DAQ Platform

Figure 21 shows the connection of the USB cable to the USB DAQ Platform. When you make this connection, it is recommended that you first turn your computer sound on. When the cable is plugged in, you should hear the distinctive Microsoft® Windows® sound that indicates a bew USB device was recognized. The USB DAQ Platform uses the HID drivers included in the Windows operating system. In some cases, Windows may display messages the first time the EVM is plugged in (as shown here).

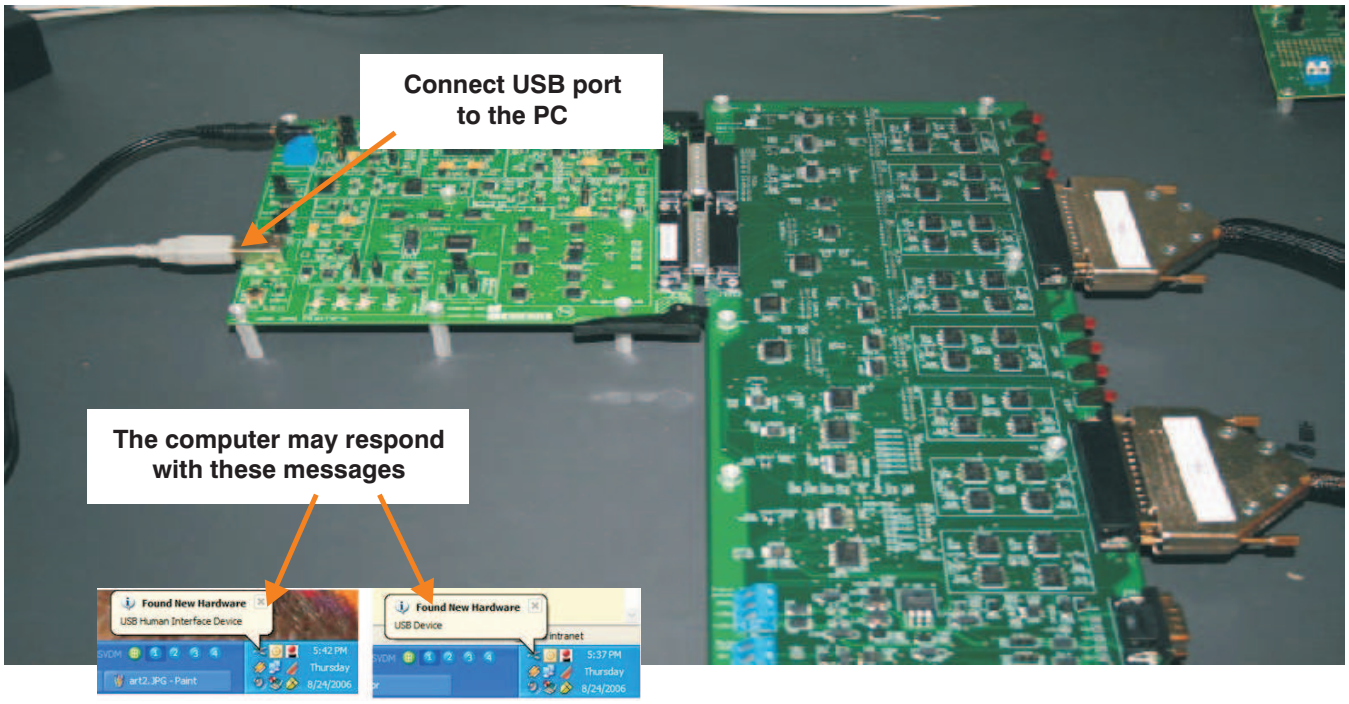

Figure 21. Connect USB Cable to USB DAQ Platform

Copyright © 2010–2016, Texas Instruments Incorporated

Figure 22 shows the complete Multi-Cal-System setup. At this point, the system is fully connected and you are ready to run the software.

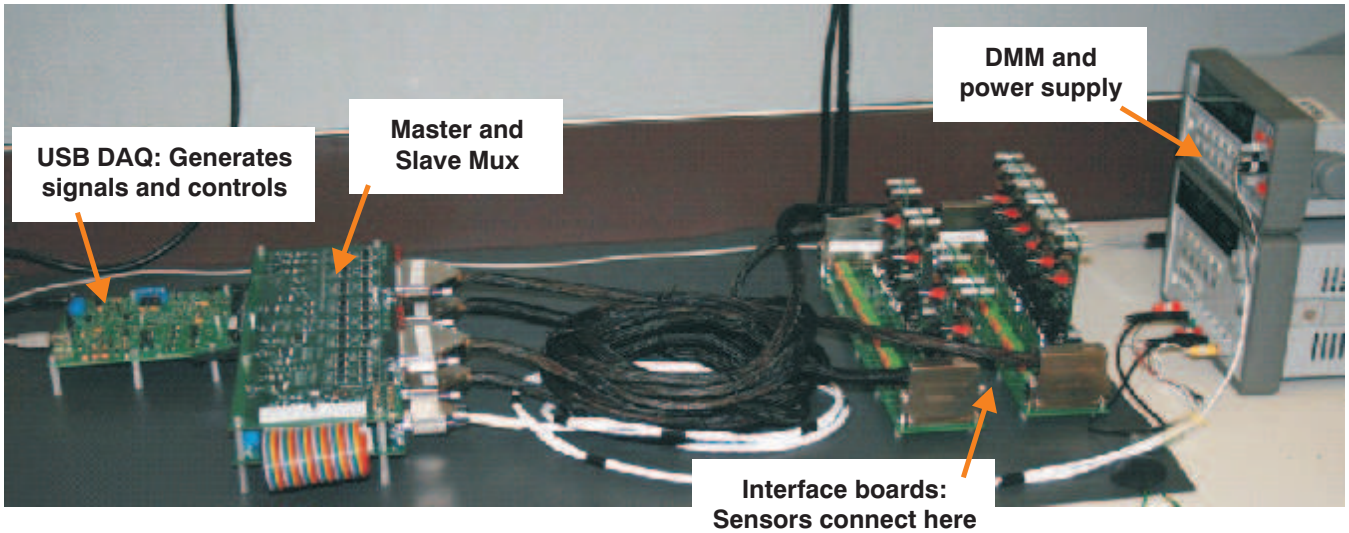

Figure 22. Complete System Setup

3 Expanding the System Size

The Multi-Cal-System can be expanded by adding Multi-Cal-Slave boards. Each Multi-Cal-Slave board adds eight additional channels. The maximum system size is 64 channels (one master and seven slaves). The first step in expanding the system size is to remove the 0.25-inch standoffs and replace them with 1.25-inch standoffs; this step is shown in Figure 23.

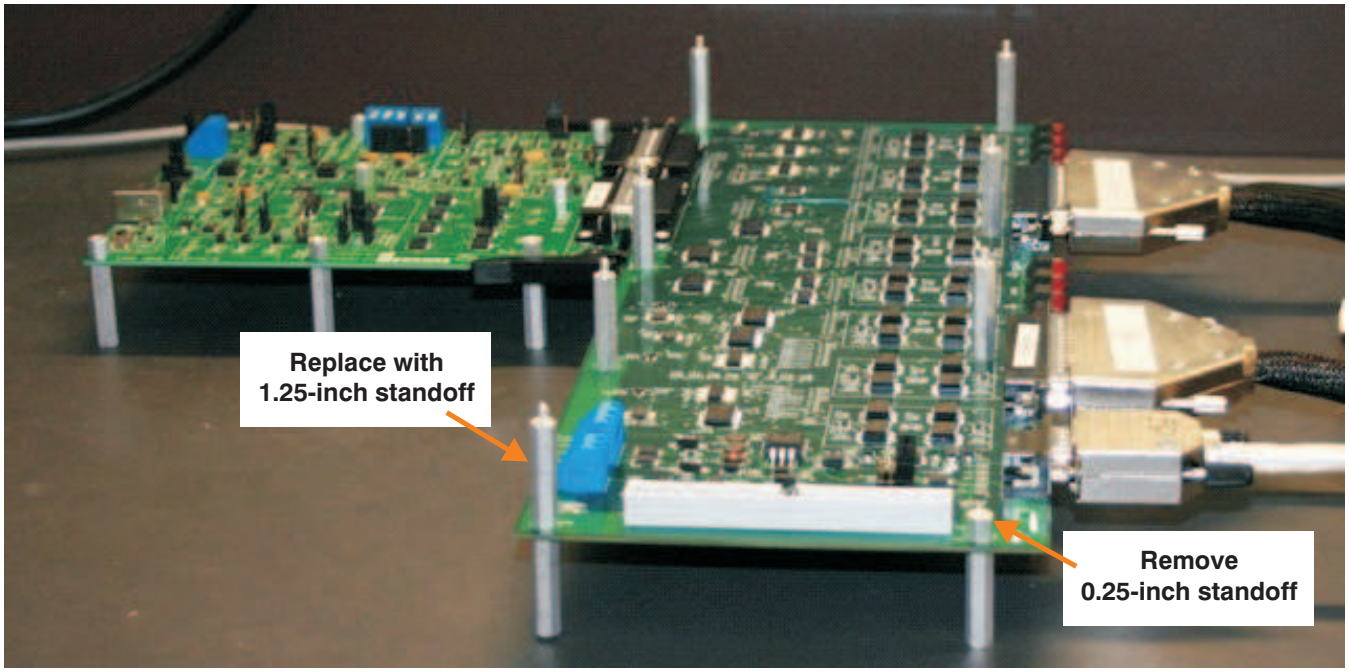

Figure 23. Replace Standoffs

Copyright © 2010–2016, Texas Instruments Incorporated

The next step in expanding the physical system size is to connect the slave ribbon cable to the master; this step is illustrated in Figure 24. Make sure to match the key on the ribbon cable with the notch in the connector.

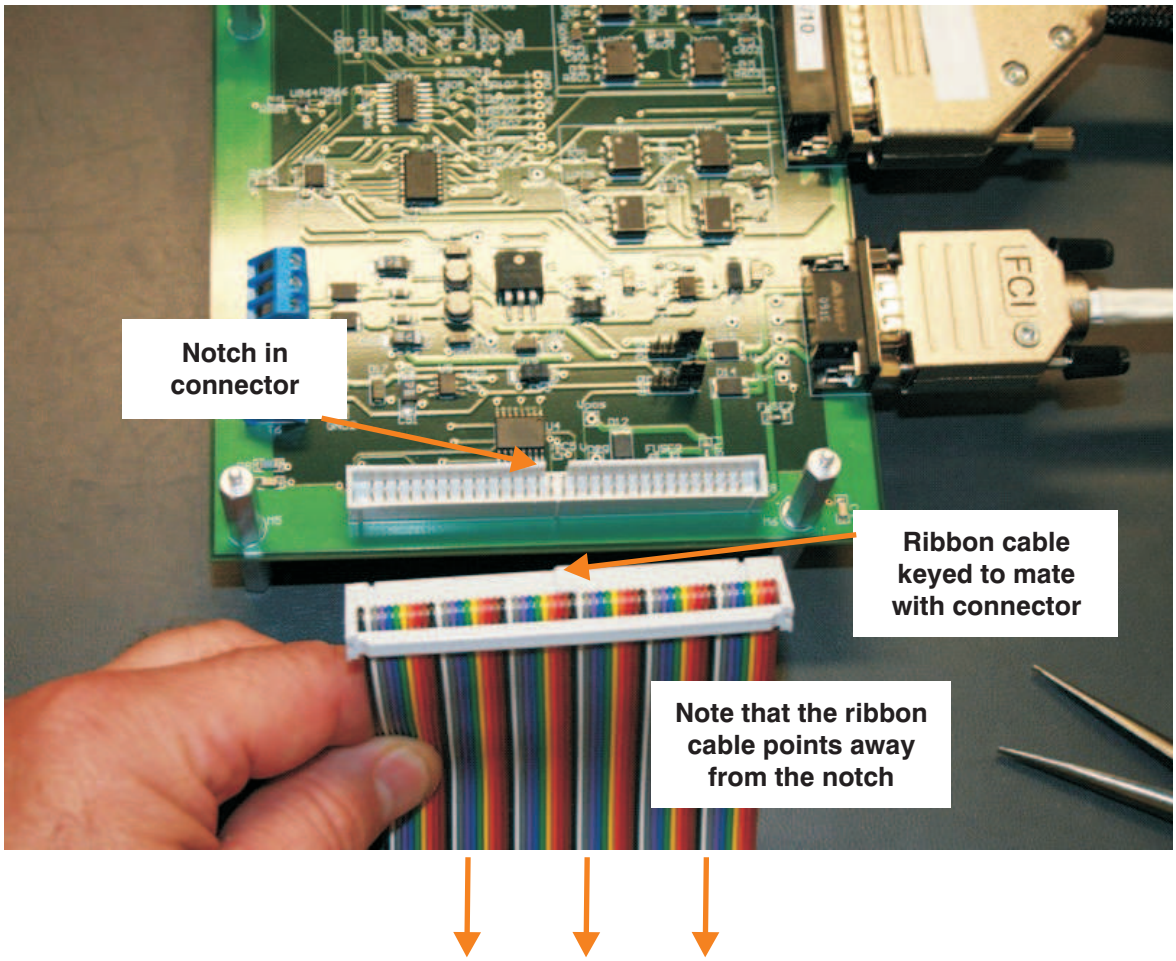

Figure 24. Connect the Ribbon Cable to the Master

Copyright © 2010–2016, Texas Instruments Incorporated

Now connect the slave ribbon cable to the slave. Make sure to match the key on the ribbon cable with the notch in the connector, as Figure 25 shows. Note that the cable loop is outside of the master and slave boards.

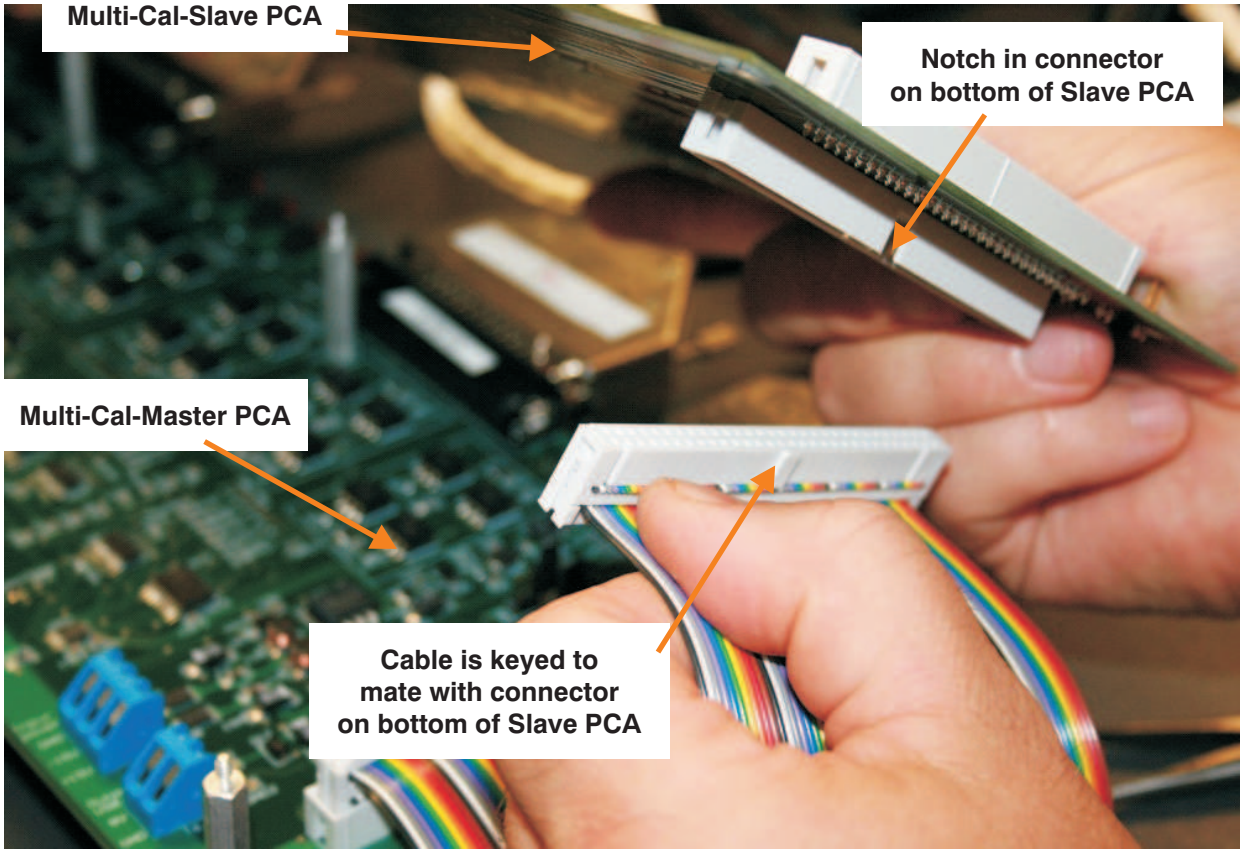

Figure 25. Connect Slave Ribbon Cable to Slave

Copyright © 2010–2016, Texas Instruments Incorporated

Secure the Multi-Cal-Slave on top of the Multi-Cal- Master, as Figure 26 illustrates. Use the 0.25-inch standoffs to fasten the slave on top.

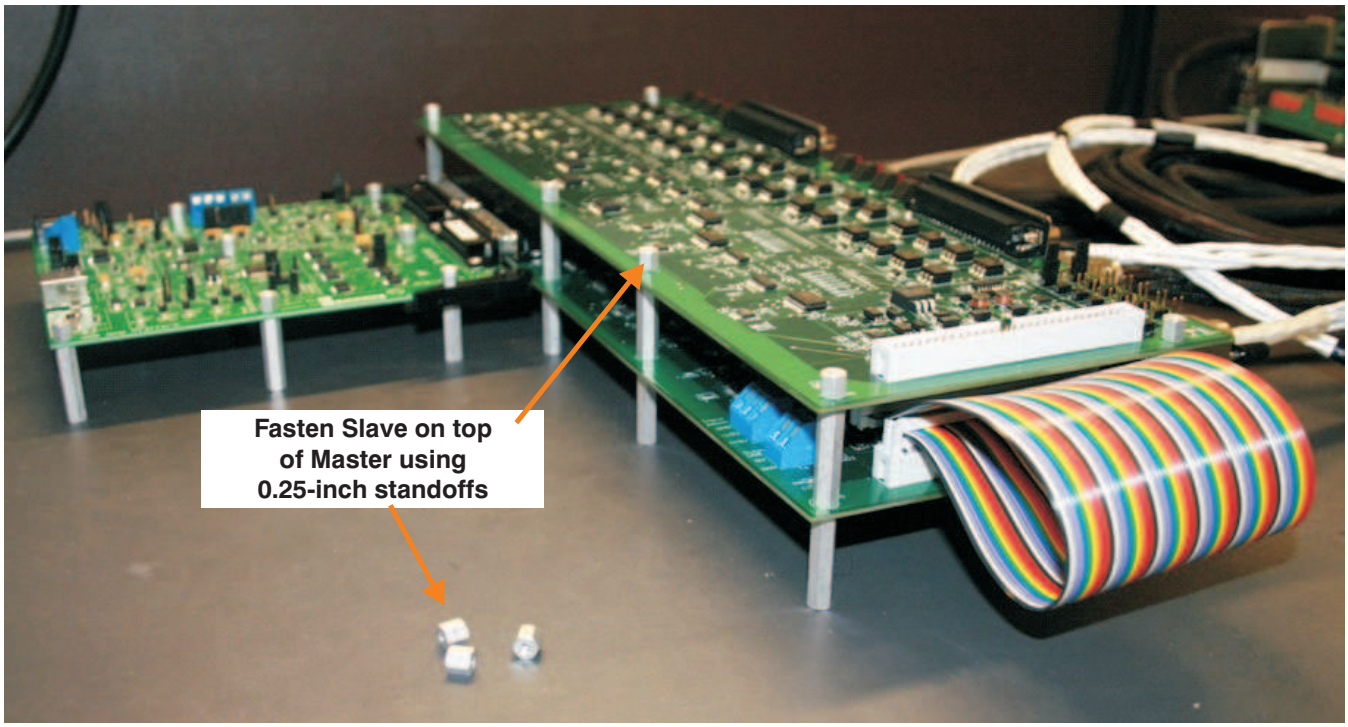

Figure 26. Secure Slave to Master

Copyright © 2010–2016, Texas Instruments Incorporated

Figure 27 shows the connection of the cables to the slave board. Make sure the cable is properly seated and fully screwed down. Each slave board will have two interface cables. Each interface cable has four channels.

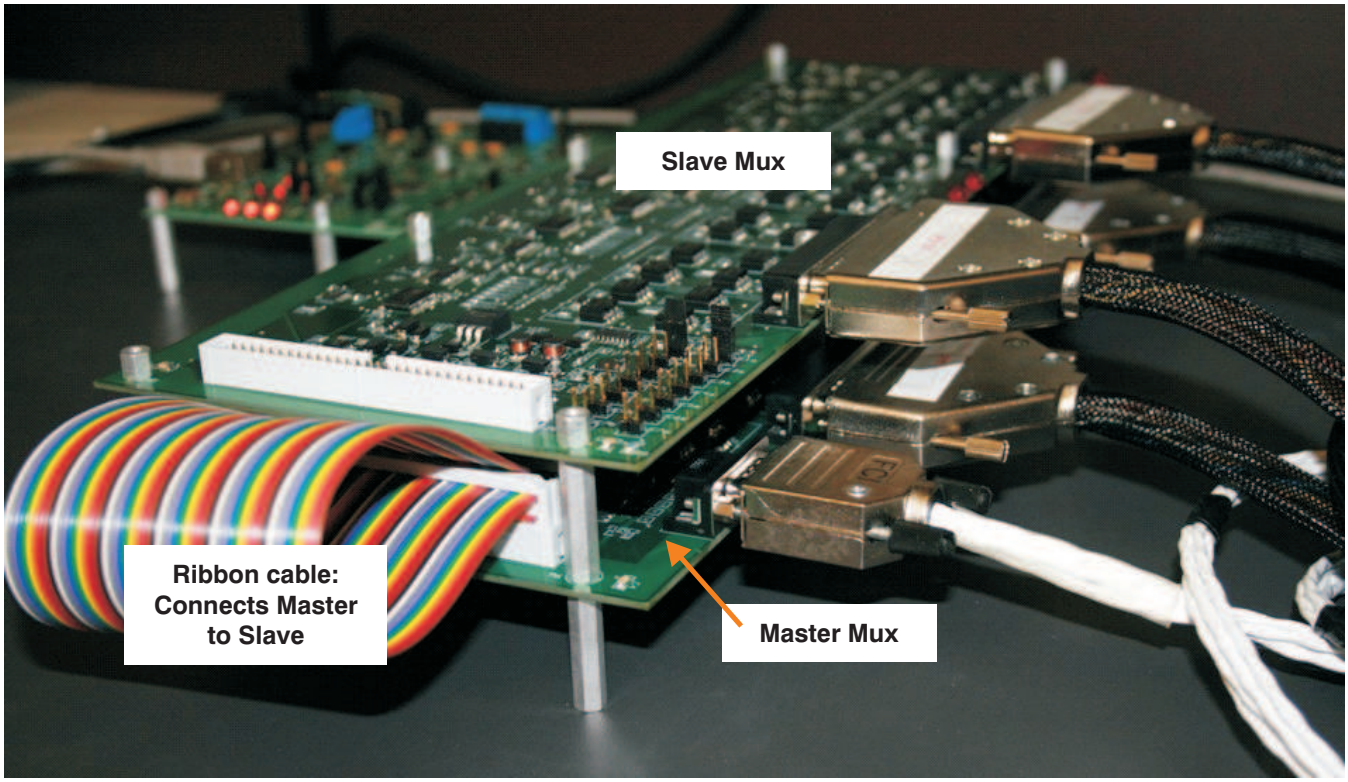

Figure 27. Cable Connections to Slave Board

Copyright © 2010–2016, Texas Instruments Incorporated

Figure 28 shows the jumpers on the Multi-Cal-Slave board that identify the board location. The jumpers on each slave board must be in a unique position. For the first slave board connected, set the jumpers in the *Slave1a* and *Slave1b* position. As you add additional boards, increment the jumper position. For example, on the second board connected, use the *Slave2a* and *Slave2b* position.

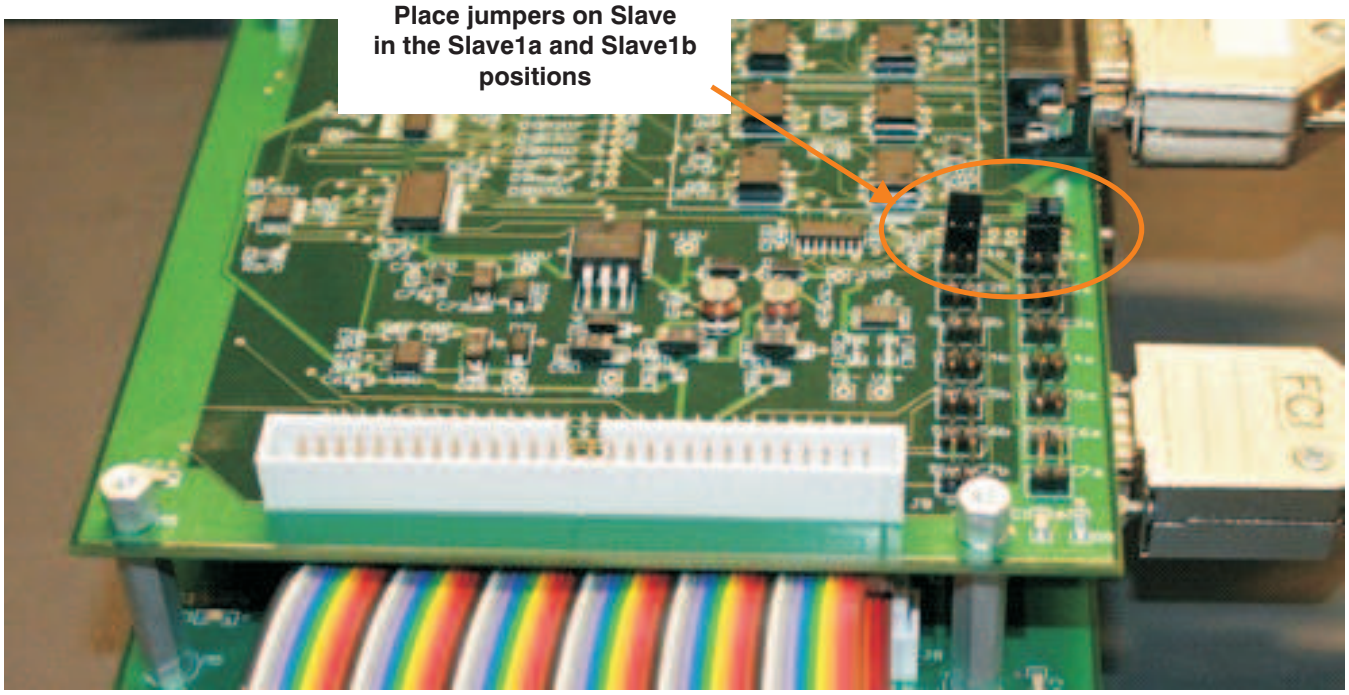

Figure 28. Jumper Locations and Positions for Expanding System Size

The final step to expanding the system is to connect the interface-cables from the slave to an interface board. Figure 29 shows the complete system connection for a 16-channel system (that is, one master and one slave).

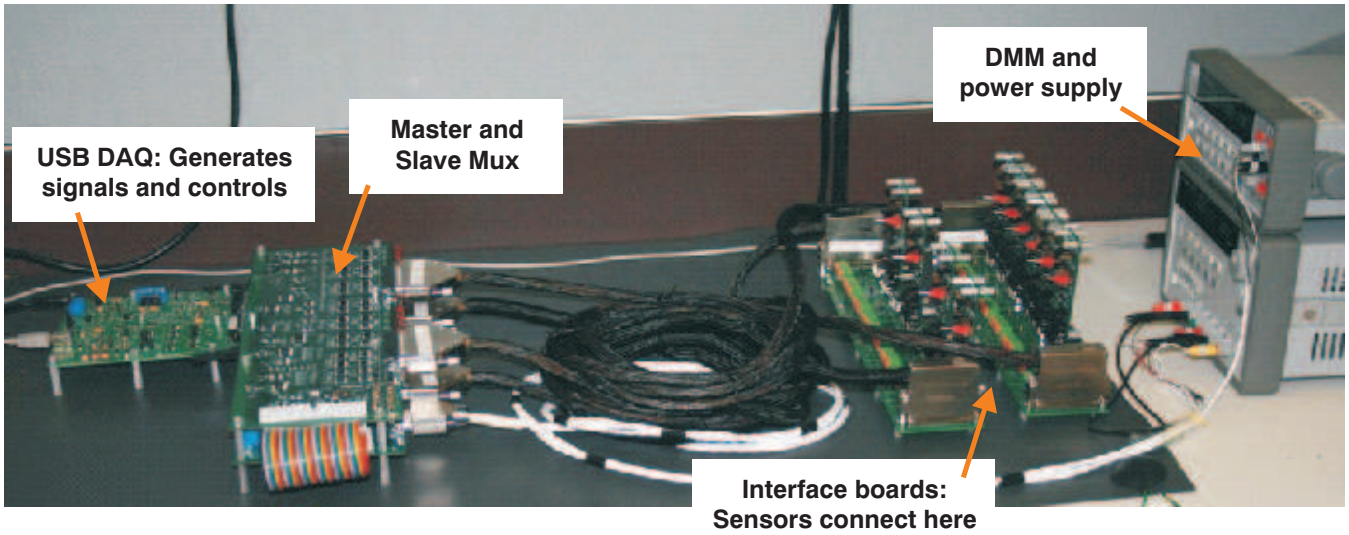

Figure 29. Complete Expanded System

Copyright © 2010–2016, Texas Instruments Incorporated

4 Troubleshooting Tips

The most common issues that can occur with the Multi-Cal-System are communication problems. Figure 30 shows the message that occurs if you have a communications problem. If you get this message, use the Windows Device Manager to check the status of the USB-DIG-Platform.

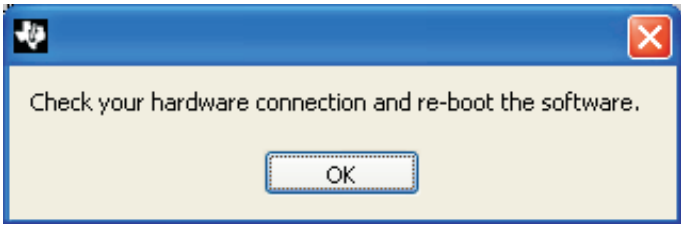

Figure 30. Communications Error Message

Figure 31 shows the Windows Device Manager and the active connection for a USB-driven human interface device. When you plug and unplug the USB cable, you can see the device appear and disappear from the list. Select your device and review the details. It should show up as a *Human Interface Device* with PID = 2F90, 2F91, 2F92, or 2F93. If it appears as a good USB device, but is not a human interface device, then the firmware was not programmed properly.

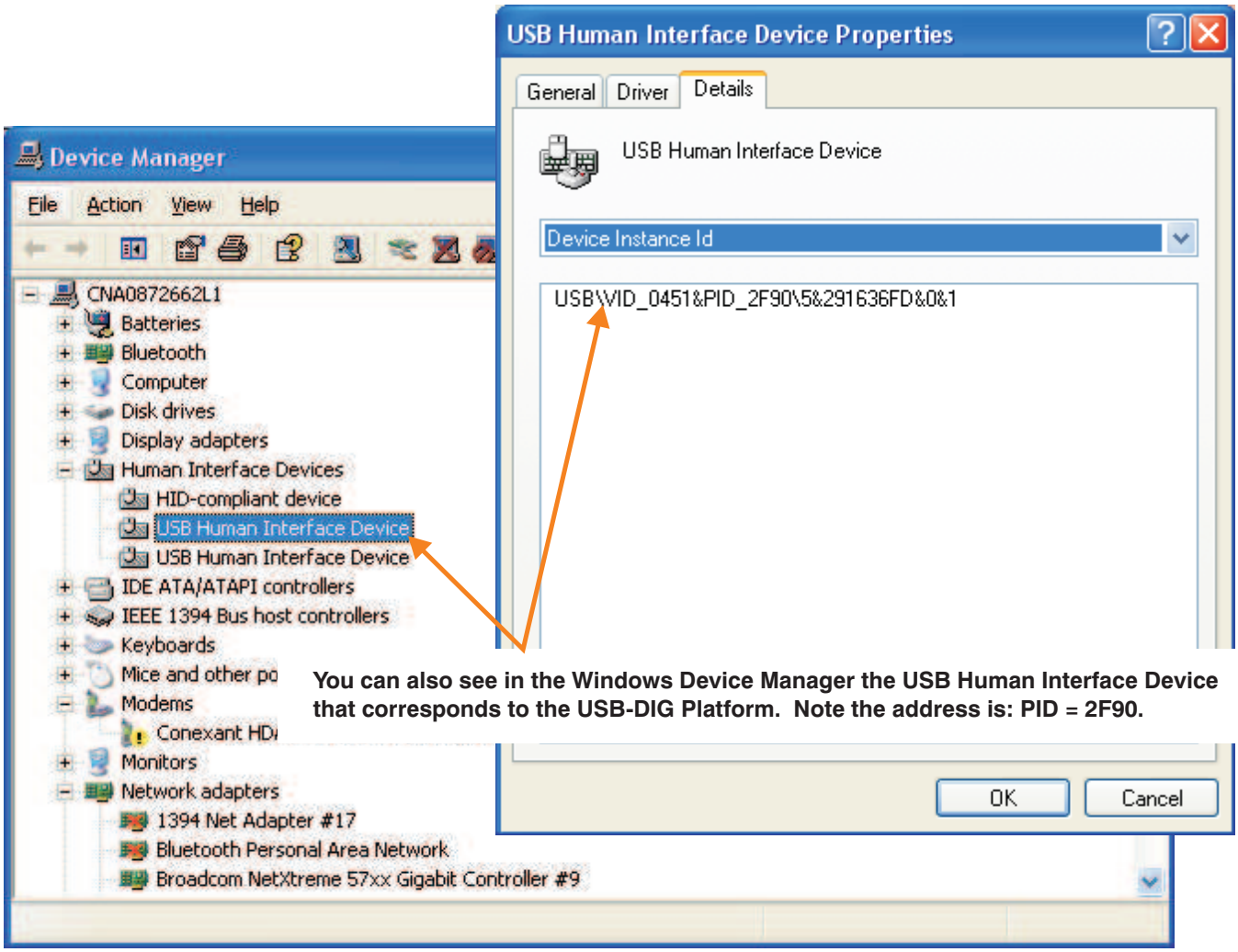

Figure 31. WIndows Device Manager: Active Human Interface Device Connection

Copyright © 2010–2016, Texas Instruments Incorporated

5 Bill of Materials

Table 5 shows the parts list for the Multi-Cal-System EVM board.

Table 5. Multi-Cal-System EVM Board Parts List

No.	Qty	Ref Des	Description	Vendor	Part Number
1	9	C006, C106, C206, C306, C406, C506, C606, C706, C71	Capacitor, 10000pF 50V CERAMIC X7R 0603	KEMET	C0603C103K5RACTU
2	53	C6, C5, C60, C61, C62, C840, C842, C907, C908, C909, C910, C901, C902, C903, C904, C905, C906, C911, C912, C913, C914, C915, C916, C921, C928, C929, C938, C970, C971, C972, C973, C001, C002, C101, C102, C201, C202, C301, C302, C401, C402, C501, C502, C601, C602, C701, C702, C811, C812, C813, C814, C820, C70	Capacitor, .10µF 25V Ceramic,Y5V 0603	KEMET	C0603C104M3VACTU
3	2	C56, C57	Capacitor, Ceramic, 1µF 25V X5R 0603	Murata Electronics North America	GRM188R61E105KA12D
4	6	C54, C55, C50, C51, C65, C72	Capacitor, Tantalum 4.7µF 35V 20% SMD	Nichicon	F931V475MCC
5	4	C1, C2, C3, C4	Capacitor, Ceramic, .01µF 10% 1000V X7R 1206	Vishay/Vitramon	VJ1206Y103KXGAT5Z
6	1	R938	Resistor, 49.9 kΩ 1/10W 1% 0603 SMD	Panasonic - ECG	ERJ-3EKF4992V
7	1	R8	Resistor, 1 MΩ 1% 1206 TF High Voltage	Stackpole Electronics Inc	HVCB 1206 T2 1M 1% I
8	8	R0, R1, R2, R3, R4, R5, R6, R7	Resistor, 499 Ω 1/10W 1% 603 SMD	Panasonic - ECG	ERJ-3EKF4990V
9	23	R006, R106, R206, R306, R406, R506, R606, R706, R007, R107, R207, R307, R407, R507, R607, R707,R939, R917, R916, R963, R964, R965, R966	Resistor, 100 Ω 1/10W 5% 0603 SMD	Stackpole Electronics Inc	RMCF 1/16 100 5% R
10	8	R004, R104, R204, R304, R404, R504, R604, R704,	Resistor, 200 Ω 1/4W 5% 1206 SMD	Stackpole Electronics Inc	RMCF 1/8 200 5% R

Copyright © 2010–2016, Texas Instruments Incorporated

Table 5. Multi-Cal-System EVM Board Parts List (continued)

No.	Qty	Ref Des	Description	Vendor	Part Number
11	32	R001, R002, R003, R005, R101, R102, R103, R105, R201, R202, R203, R205, R301, R302, R303, R305, R401, R402, R403, R405, R501, R502, R503, R505, R601, R602, R603, R605, R701, R702 ,R703, R705	Resistor, 402 Ω 1/10W 1% 0603 SMD	Panasonic - ECG	ERJ-3EKF4020V
12	1	R64	Resistor, 10 kΩ 1/10W 1% 0603 SMD	Stackpole Electronics Inc	RMCF 1/16 10K 1% R
13	1	R63	Resistor, 69.8 kΩ 1/10W 1% 0603 SMD	Yageo	RC0603FR-0769K8L
14	7	RN1, RN2, RN3, RN902, RN906, RN907, RN908	Resistor, ARRAY 100 kΩ 10TRM BSS SMD	CTS Resistor Products	746X101104JP
15	1	R970	Resistor, 0.0 Ω 1/4W 5% 1206 SMD	Vishay/Dale	CRCW12060000Z0EA
16	3	U901, U902, U905	IC SW Mux analog 1/8CH 16-TSSOP	Analog Devices Inc	ADG1408YRUZ
17	5	U903, U904, U906, U907, U908	IC MultiplexeR 8X1 16SOIC	Maxim	MAX354CWE
18	3	U919, U920, U909	IC Chan Protector Octal 18-SOIC	Analog Devices Inc	ADG467BRZ
19	32	U001, U002, U003, U004, U101, U102, U103, U104, U201, U202, U203, U204, U301, U302, U303, U304, U401, U402, U403, U404, U501, U502, U503, U504, U601, U602, U603, U604, U701, U702, U703, U704,	Relay Opto DC 60V 600MA 6-SMD	Panasonic Electric Works	AQV102A
20	6	U963, U964, U965, U916, U917, U939	Diode Schottky 30 V 200 mA SOT23-3	NXP Semiconductors	BAT754S,215
21	2	U800, U4	IC I/O Expander I^2C 8B 16SOIC	Texas Instruments	PCA9534DWR
22	2	U820, U821	IC I/O Expander I^2C 8B 16SOIC	Texas Instruments	PCA9534ADWR
23	1	U938	IC Buff/Dvr Noninvert SOT235	Texas Instruments	SN74LVC1G07DBVR
24	1	U70	IC LDO Reg 10 V 150 mA SOT23-5	Texas Instruments	LP2985A-10DBVR
25	1	U921	IC 3-TO-8 Decoder/Demux 16-SSOP	Texas Instruments	SN74HC138DBR

Copyright © 2010–2016, Texas Instruments Incorporated

Table 5. Multi-Cal-System EVM Board Parts List (continued)

No.	Qty	Ref Des	Description	Vendor	Part Number
26	1	U60	IC .5 A Neg Adj Lin LDO Reg 8SOIC	Texas Instruments	UCC384DP-ADJ
27	1	U6	IC LDO Reg 150 mA 5 V D2PAK-3 TO-263	Texas Instruments	TL750L05CKTTR
28	1	U5	IC 8 V 150 mA LDO Reg 8-SOIC	Texas Instruments	TL750L08CD
29	8	U005, U105, U205, U305, U405, U505, U605, U705	IC SGL 2 in Pos-AND Gate SOT23-5	Texas Instruments	SN74AHC1G08DBVR
30	8	U006, U106, U206, U306, U406, U506, U606, U706	IC Single Inverter Gate SOT23-5	Texas Instruments	SN74AHC1G04DBVR
31	2	U811, U812	IC Quad 2-In NOR Gate 14-SOIC	Texas Instruments	SN74HC02D
32	2	U813, U814	IC QUAD 2-Input AND GatE 14-SOIC	Texas Instruments	SN74HC08D
33	1	U35	IC OCT D-Type F-F W/Clr 20-SSOP	Texas Instruments	SN74HC273DBR
34	8	D0, D1, D2, D3, D4, D5, D6, D7	LED RED T1-3/4 Rt Ang PCB	CML Innovative Technologies	5307H1
35	2	D10, D11	Diode TVS 16 V 400 W Uni 5% SMA	Littelfuse Inc	SMAJ16A
36	2	D20, D21	TVS 400 W 11 V Unidirect SMA	Littelfuse Inc	SMAJ11A-TP
37	1	D17	Diode TVS 9.0V 400 W Uni 5% SMA	Littelfuse Inc	SMAJ9.0A
38	1	D16	Diode TVS 6.0V 400 W Uni 5% SMA	Littelfuse Inc	SMAJ6.0A
39	5	D12, D8, D9, D14, D15	Diode Schottky 100 V 5 A PowerDI5	Diodes Inc	PDS5100H-13
40	3	Fuse1, Fuse2, Fuse3	PTC Reset 30 V .200 A SMD 1210	Littelfuse Inc	1210L020WR
41	2	L2, L3	Inductor Unshield 100 µH .52A SMD	JW Miller A Bourns Company	PM54-101K-RC
42	2	F1, F2	Ferrite Chip 120 Ω 3000 mA 1206	Murata Electronics North America	BLM31PG121SN1
43	2	J0, J1	Conn DB37 MALE .318" R/A NICKEL	Norcomp Inc.	182-037-113R531
44	1	J9	Conn D-SUB Plug R/A 9 Pos Gold/FL	AMP/Tyco Electronics	1734352-1
45	1	J102	Conn D-SUB Rcpt R/A 25 Pos 30 Gold (With Threaded Inserts and Board locks)	AMP/Tyco Electronics	5747846-4
46	1	J101	Conn D-SUB Plug R/A 25 Pos 30GOLD (With Threaded Inserts and Board locks)	AMP/Tyco Electronics	5747842-4
47	1	J8	Conn Header Low-Pro 60 Pos Gold	Assmann Electronics Inc	AWHW60G-0202-T-R
48	8	CH_ON, CH_OFF, MBIT, SPI_SCK, SPI_CS, SPI_IO, ONE, Vout, GND_SEN	Connector	OMIT	OMIT

Copyright © 2010–2016, Texas Instruments Incorporated

Table 5. Multi-Cal-System EVM Board Parts List (continued)

No.	Qty	Ref Des	Description	Vendor	Part Number
49	4	JMP1, JMP2, JMP4, JMP4	Header, 3 pos 0.100" SGL Gold	Samtec	TSW-103-07-G-S
50	4	JMP1, JMP2, JMP4, JMP5	Shunt LP w/handle 2 pos 30AU	Tyco Electronics	881545-2
51	1	T1	Terminal block 5 mm 3POS	ON SHORE TECHNOLOGY	ED300/3
52	1	T6	Terminal block 5 mm 2POS	ON SHORE TECHNOLOGY	ED300/2
53	16	M1-M8 and USB DAQ Standoffs (bottom)	Standoff Hex M/F 4-40 1.125"ALUM	Keystone Electronics	8406
54	16	M1-M8 and USB DAQ Standoffs (top)	Standoff Hex 4-40 Thr alum .250"	Keystone Electronics	2201
55	6	Use on J0, J1, J9	Female Screwlock 4-40 .312"	Norcomp Inc.	SFSO4401NR

Copyright © 2010–2016, Texas Instruments Incorporated

Revision History

NOTE: Page numbers for previous revisions may differ from page numbers in the current version.

Changes from A Revision (April, 2011) to B Revision	Page
• Deleted all references to included power supply. A power supply is no longer included with this EVM.	1

Copyright © 2010–2016, Texas Instruments Incorporated

STANDARD TERMS AND CONDITIONS FOR EVALUATION MODULES

1. *Delivery:* TI delivers TI evaluation boards, kits, or modules, including any accompanying demonstration software, components, or documentation (collectively, an “EVM” or “EVMs”) to the User (“User”) in accordance with the terms and conditions set forth herein. Acceptance of the EVM is expressly subject to the following terms and conditions.

   1.1 EVMs are intended solely for product or software developers for use in a research and development setting to facilitate feasibility evaluation, experimentation, or scientific analysis of TI semiconductors products. EVMs have no direct function and are not finished products. EVMs shall not be directly or indirectly assembled as a part or subassembly in any finished product. For clarification, any software or software tools provided with the EVM (“Software”) shall not be subject to the terms and conditions set forth herein but rather shall be subject to the applicable terms and conditions that accompany such Software

   1.2 EVMs are not intended for consumer or household use. EVMs may not be sold, sublicensed, leased, rented, loaned, assigned, or otherwise distributed for commercial purposes by Users, in whole or in part, or used in any finished product or production system.

2 *Limited Warranty and Related Remedies/Disclaimers*:

   2.1 These terms and conditions do not apply to Software. The warranty, if any, for Software is covered in the applicable Software License Agreement.

   2.2 TI warrants that the TI EVM will conform to TI's published specifications for ninety (90) days after the date TI delivers such EVM to User. Notwithstanding the foregoing, TI shall not be liable for any defects that are caused by neglect, misuse or mistreatment by an entity other than TI, including improper installation or testing, or for any EVMs that have been altered or modified in any way by an entity other than TI. Moreover, TI shall not be liable for any defects that result from User's design, specifications or instructions for such EVMs. Testing and other quality control techniques are used to the extent TI deems necessary or as mandated by government requirements. TI does not test all parameters of each EVM.

   2.3 If any EVM fails to conform to the warranty set forth above, TI's sole liability shall be at its option to repair or replace such EVM, or credit User's account for such EVM. TI's liability under this warranty shall be limited to EVMs that are returned during the warranty period to the address designated by TI and that are determined by TI not to conform to such warranty. If TI elects to repair or replace such EVM, TI shall have a reasonable time to repair such EVM or provide replacements. Repaired EVMs shall be warranted for the remainder of the original warranty period. Replaced EVMs shall be warranted for a new full ninety (90) day warranty period.

3 *Regulatory Notices:*

   3.1 *United States*

      3.1.1 *Notice applicable to EVMs not FCC-Approved:*

      This kit is designed to allow product developers to evaluate electronic components, circuitry, or software associated with the kit to determine whether to incorporate such items in a finished product and software developers to write software applications for use with the end product. This kit is not a finished product and when assembled may not be resold or otherwise marketed unless all required FCC equipment authorizations are first obtained. Operation is subject to the condition that this product not cause harmful interference to licensed radio stations and that this product accept harmful interference. Unless the assembled kit is designed to operate under part 15, part 18 or part 95 of this chapter, the operator of the kit must operate under the authority of an FCC license holder or must secure an experimental authorization under part 5 of this chapter.

      3.1.2 *For EVMs annotated as FCC – FEDERAL COMMUNICATIONS COMMISSION Part 15 Compliant:*

      CAUTION

      This device complies with part 15 of the FCC Rules. Operation is subject to the following two conditions: (1) This device may not cause harmful interference, and (2) this device must accept any interference received, including interference that may cause undesired operation.

      Changes or modifications not expressly approved by the party responsible for compliance could void the user's authority to operate the equipment.

      FCC Interference Statement for Class A EVM devices

      NOTE: This equipment has been tested and found to comply with the limits for a Class A digital device, pursuant to part 15 of the FCC Rules. These limits are designed to provide reasonable protection against harmful interference when the equipment is operated in a commercial environment. This equipment generates, uses, and can radiate radio frequency energy and, if not installed and used in accordance with the instruction manual, may cause harmful interference to radio communications. Operation of this equipment in a residential area is likely to cause harmful interference in which case the user will be required to correct the interference at his own expense.

FCC Interference Statement for Class B EVM devices

NOTE: This equipment has been tested and found to comply with the limits for a Class B digital device, pursuant to part 15 of the FCC Rules. These limits are designed to provide reasonable protection against harmful interference in a residential installation. This equipment generates, uses and can radiate radio frequency energy and, if not installed and used in accordance with the instructions, may cause harmful interference to radio communications. However, there is no guarantee that interference will not occur in a particular installation. If this equipment does cause harmful interference to radio or television reception, which can be determined by turning the equipment off and on, the user is encouraged to try to correct the interference by one or more of the following measures:

- *Reorient or relocate the receiving antenna.*
- *Increase the separation between the equipment and receiver.*
- *Connect the equipment into an outlet on a circuit different from that to which the receiver is connected.*
- *Consult the dealer or an experienced radio/TV technician for help.*

3.2 *Canada*

3.2.1 *For EVMs issued with an Industry Canada Certificate of Conformance to RSS-210*

Concerning EVMs Including Radio Transmitters:

This device complies with Industry Canada license-exempt RSS standard(s). Operation is subject to the following two conditions: (1) this device may not cause interference, and (2) this device must accept any interference, including interference that may cause undesired operation of the device.

Concernant les EVMs avec appareils radio:

Le présent appareil est conforme aux CNR d'Industrie Canada applicables aux appareils radio exempts de licence. L'exploitation est autorisée aux deux conditions suivantes: (1) l'appareil ne doit pas produire de brouillage, et (2) l'utilisateur de l'appareil doit accepter tout brouillage radioélectrique subi, même si le brouillage est susceptible d'en compromettre le fonctionnement.

Concerning EVMs Including Detachable Antennas:

Under Industry Canada regulations, this radio transmitter may only operate using an antenna of a type and maximum (or lesser) gain approved for the transmitter by Industry Canada. To reduce potential radio interference to other users, the antenna type and its gain should be so chosen that the equivalent isotropically radiated power (e.i.r.p.) is not more than that necessary for successful communication. This radio transmitter has been approved by Industry Canada to operate with the antenna types listed in the user guide with the maximum permissible gain and required antenna impedance for each antenna type indicated. Antenna types not included in this list, having a gain greater than the maximum gain indicated for that type, are strictly prohibited for use with this device.

Concernant les EVMs avec antennes détachables

Conformément à la réglementation d'Industrie Canada, le présent émetteur radio peut fonctionner avec une antenne d'un type et d'un gain maximal (ou inférieur) approuvé pour l'émetteur par Industrie Canada. Dans le but de réduire les risques de brouillage radioélectrique à l'intention des autres utilisateurs, il faut choisir le type d'antenne et son gain de sorte que la puissance isotrope rayonnée équivalente (p.i.r.e.) ne dépasse pas l'intensité nécessaire à l'établissement d'une communication satisfaisante. Le présent émetteur radio a été approuvé par Industrie Canada pour fonctionner avec les types d'antenne énumérés dans le manuel d'usage et ayant un gain admissible maximal et l'impédance requise pour chaque type d'antenne. Les types d'antenne non inclus dans cette liste, ou dont le gain est supérieur au gain maximal indiqué, sont strictement interdits pour l'exploitation de l'émetteur

3.3 *Japan*

3.3.1 *Notice for EVMs delivered in Japan:* Please see http://www.tij.co.jp/lsds/ti_ja/general/eStore/notice_01.page 日本国内に輸入される評価用キット、ボードについては、次のところをご覧ください。
http://www.tij.co.jp/lsds/ti_ja/general/eStore/notice_01.page

3.3.2 *Notice for Users of EVMs Considered "Radio Frequency Products" in Japan:* EVMs entering Japan may not be certified by TI as conforming to Technical Regulations of Radio Law of Japan.

If User uses EVMs in Japan, not certified to Technical Regulations of Radio Law of Japan, User is required by Radio Law of Japan to follow the instructions below with respect to EVMs:

1. Use EVMs in a shielded room or any other test facility as defined in the notification #173 issued by Ministry of Internal Affairs and Communications on March 28, 2006, based on Sub-section 1.1 of Article 6 of the Ministry's Rule for Enforcement of Radio Law of Japan,
2. Use EVMs only after User obtains the license of Test Radio Station as provided in Radio Law of Japan with respect to EVMs, or
3. Use of EVMs only after User obtains the Technical Regulations Conformity Certification as provided in Radio Law of Japan with respect to EVMs. Also, do not transfer EVMs, unless User gives the same notice above to the transferee. Please note that if User does not follow the instructions above, User will be subject to penalties of Radio Law of Japan.

【無線電波を送信する製品の開発キットをお使いになる際の注意事項】 開発キットの中には技術基準適合証明を受けていないものがあります。 技術適合証明を受けていないもののご使用に際しては、電波法遵守のため、以下のいずれかの措置を取っていただく必要がありますのでご注意ください。

1. 電波法施行規則第6条第1項第1号に基づく平成18年3月28日総務省告示第173号で定められた電波暗室等の試験設備でご使用いただく。
2. 実験局の免許を取得後ご使用いただく。
3. 技術基準適合証明を取得後ご使用いただく。

なお、本製品は、上記の「ご使用にあたっての注意」を譲渡先、移転先に通知しない限り、譲渡、移転できないものとします。

上記を遵守頂けない場合は、電波法の罰則が適用される可能性があることをご留意ください。 日本テキサス・インスツルメンツ株式会社

東京都新宿区西新宿６丁目２４番１号

西新宿三井ビル

3.3.3 *Notice for EVMs for Power Line Communication:* Please see http://www.tij.co.jp/lsds/ti_ja/general/eStore/notice_02.page

電力線搬送波通信についての開発キットをお使いになる際の注意事項については、次のところをご覧ください。http://www.tij.co.jp/lsds/ti_ja/general/eStore/notice_02.page

4 *EVM Use Restrictions and Warnings:*

4.1 EVMS ARE NOT FOR USE IN FUNCTIONAL SAFETY AND/OR SAFETY CRITICAL EVALUATIONS, INCLUDING BUT NOT LIMITED TO EVALUATIONS OF LIFE SUPPORT APPLICATIONS.

4.2 User must read and apply the user guide and other available documentation provided by TI regarding the EVM prior to handling or using the EVM, including without limitation any warning or restriction notices. The notices contain important safety information related to, for example, temperatures and voltages.

4.3 *Safety-Related Warnings and Restrictions:*

4.3.1 User shall operate the EVM within TI's recommended specifications and environmental considerations stated in the user guide, other available documentation provided by TI, and any other applicable requirements and employ reasonable and customary safeguards. Exceeding the specified performance ratings and specifications (including but not limited to input and output voltage, current, power, and environmental ranges) for the EVM may cause personal injury or death, or property damage. If there are questions concerning performance ratings and specifications, User should contact a TI field representative prior to connecting interface electronics including input power and intended loads. Any loads applied outside of the specified output range may also result in unintended and/or inaccurate operation and/or possible permanent damage to the EVM and/or interface electronics. Please consult the EVM user guide prior to connecting any load to the EVM output. If there is uncertainty as to the load specification, please contact a TI field representative. During normal operation, even with the inputs and outputs kept within the specified allowable ranges, some circuit components may have elevated case temperatures. These components include but are not limited to linear regulators, switching transistors, pass transistors, current sense resistors, and heat sinks, which can be identified using the information in the associated documentation. When working with the EVM, please be aware that the EVM may become very warm.

4.3.2 EVMs are intended solely for use by technically qualified, professional electronics experts who are familiar with the dangers and application risks associated with handling electrical mechanical components, systems, and subsystems. User assumes all responsibility and liability for proper and safe handling and use of the EVM by User or its employees, affiliates, contractors or designees. User assumes all responsibility and liability to ensure that any interfaces (electronic and/or mechanical) between the EVM and any human body are designed with suitable isolation and means to safely limit accessible leakage currents to minimize the risk of electrical shock hazard. User assumes all responsibility and liability for any improper or unsafe handling or use of the EVM by User or its employees, affiliates, contractors or designees.

4.4 User assumes all responsibility and liability to determine whether the EVM is subject to any applicable international, federal, state, or local laws and regulations related to User's handling and use of the EVM and, if applicable, User assumes all responsibility and liability for compliance in all respects with such laws and regulations. User assumes all responsibility and liability for proper disposal and recycling of the EVM consistent with all applicable international, federal, state, and local requirements.

5. *Accuracy of Information:* To the extent TI provides information on the availability and function of EVMs, TI attempts to be as accurate as possible. However, TI does not warrant the accuracy of EVM descriptions, EVM availability or other information on its websites as accurate, complete, reliable, current, or error-free.

6. *Disclaimers:*

   6.1 EXCEPT AS SET FORTH ABOVE, EVMS AND ANY WRITTEN DESIGN MATERIALS PROVIDED WITH THE EVM (AND THE DESIGN OF THE EVM ITSELF) ARE PROVIDED "AS IS" AND "WITH ALL FAULTS." TI DISCLAIMS ALL OTHER WARRANTIES, EXPRESS OR IMPLIED, REGARDING SUCH ITEMS, INCLUDING BUT NOT LIMITED TO ANY IMPLIED WARRANTIES OF MERCHANTABILITY OR FITNESS FOR A PARTICULAR PURPOSE OR NON-INFRINGEMENT OF ANY THIRD PARTY PATENTS, COPYRIGHTS, TRADE SECRETS OR OTHER INTELLECTUAL PROPERTY RIGHTS.

   6.2 EXCEPT FOR THE LIMITED RIGHT TO USE THE EVM SET FORTH HEREIN, NOTHING IN THESE TERMS AND CONDITIONS SHALL BE CONSTRUED AS GRANTING OR CONFERRING ANY RIGHTS BY LICENSE, PATENT, OR ANY OTHER INDUSTRIAL OR INTELLECTUAL PROPERTY RIGHT OF TI, ITS SUPPLIERS/LICENSORS OR ANY OTHER THIRD PARTY, TO USE THE EVM IN ANY FINISHED END-USER OR READY-TO-USE FINAL PRODUCT, OR FOR ANY INVENTION, DISCOVERY OR IMPROVEMENT MADE, CONCEIVED OR ACQUIRED PRIOR TO OR AFTER DELIVERY OF THE EVM.

7. *USER'S INDEMNITY OBLIGATIONS AND REPRESENTATIONS.* USER WILL DEFEND, INDEMNIFY AND HOLD TI, ITS LICENSORS AND THEIR REPRESENTATIVES HARMLESS FROM AND AGAINST ANY AND ALL CLAIMS, DAMAGES, LOSSES, EXPENSES, COSTS AND LIABILITIES (COLLECTIVELY, "CLAIMS") ARISING OUT OF OR IN CONNECTION WITH ANY HANDLING OR USE OF THE EVM THAT IS NOT IN ACCORDANCE WITH THESE TERMS AND CONDITIONS. THIS OBLIGATION SHALL APPLY WHETHER CLAIMS ARISE UNDER STATUTE, REGULATION, OR THE LAW OF TORT, CONTRACT OR ANY OTHER LEGAL THEORY, AND EVEN IF THE EVM FAILS TO PERFORM AS DESCRIBED OR EXPECTED.

8. *Limitations on Damages and Liability:*

   8.1 *General Limitations*. IN NO EVENT SHALL TI BE LIABLE FOR ANY SPECIAL, COLLATERAL, INDIRECT, PUNITIVE, INCIDENTAL, CONSEQUENTIAL, OR EXEMPLARY DAMAGES IN CONNECTION WITH OR ARISING OUT OF THESE TERMS ANDCONDITIONS OR THE USE OF THE EVMS PROVIDED HEREUNDER, REGARDLESS OF WHETHER TI HAS BEEN ADVISED OF THE POSSIBILITY OF SUCH DAMAGES. EXCLUDED DAMAGES INCLUDE, BUT ARE NOT LIMITED TO, COST OF REMOVAL OR REINSTALLATION, ANCILLARY COSTS TO THE PROCUREMENT OF SUBSTITUTE GOODS OR SERVICES, RETESTING, OUTSIDE COMPUTER TIME, LABOR COSTS, LOSS OF GOODWILL, LOSS OF PROFITS, LOSS OF SAVINGS, LOSS OF USE, LOSS OF DATA, OR BUSINESS INTERRUPTION. NO CLAIM, SUIT OR ACTION SHALL BE BROUGHT AGAINST TI MORE THAN ONE YEAR AFTER THE RELATED CAUSE OF ACTION HAS OCCURRED.

   8.2 *Specific Limitations.* IN NO EVENT SHALL TI'S AGGREGATE LIABILITY FROM ANY WARRANTY OR OTHER OBLIGATION ARISING OUT OF OR IN CONNECTION WITH THESE TERMS AND CONDITIONS, OR ANY USE OF ANY TI EVM PROVIDED HEREUNDER, EXCEED THE TOTAL AMOUNT PAID TO TI FOR THE PARTICULAR UNITS SOLD UNDER THESE TERMS AND CONDITIONS WITH RESPECT TO WHICH LOSSES OR DAMAGES ARE CLAIMED. THE EXISTENCE OF MORE THAN ONE CLAIM AGAINST THE PARTICULAR UNITS SOLD TO USER UNDER THESE TERMS AND CONDITIONS SHALL NOT ENLARGE OR EXTEND THIS LIMIT.

9. *Return Policy.* Except as otherwise provided, TI does not offer any refunds, returns, or exchanges. Furthermore, no return of EVM(s) will be accepted if the package has been opened and no return of the EVM(s) will be accepted if they are damaged or otherwise not in a resalable condition. If User feels it has been incorrectly charged for the EVM(s) it ordered or that delivery violates the applicable order, User should contact TI. All refunds will be made in full within thirty (30) working days from the return of the components(s), excluding any postage or packaging costs.

10. *Governing Law:* These terms and conditions shall be governed by and interpreted in accordance with the laws of the State of Texas, without reference to conflict-of-laws principles. User agrees that non-exclusive jurisdiction for any dispute arising out of or relating to these terms and conditions lies within courts located in the State of Texas and consents to venue in Dallas County, Texas. Notwithstanding the foregoing, any judgment may be enforced in any United States or foreign court, and TI may seek injunctive relief in any United States or foreign court.

Mailing Address: Texas Instruments, Post Office Box 655303, Dallas, Texas 75265
Copyright © 2015, Texas Instruments Incorporated

IMPORTANT NOTICE

Texas Instruments Incorporated and its subsidiaries (TI) reserve the right to make corrections, enhancements, improvements and other changes to its semiconductor products and services per JESD46, latest issue, and to discontinue any product or service per JESD48, latest issue. Buyers should obtain the latest relevant information before placing orders and should verify that such information is current and complete. All semiconductor products (also referred to herein as “components”) are sold subject to TI’s terms and conditions of sale supplied at the time of order acknowledgment.

TI warrants performance of its components to the specifications applicable at the time of sale, in accordance with the warranty in TI’s terms and conditions of sale of semiconductor products. Testing and other quality control techniques are used to the extent TI deems necessary to support this warranty. Except where mandated by applicable law, testing of all parameters of each component is not necessarily performed.

TI assumes no liability for applications assistance or the design of Buyers’ products. Buyers are responsible for their products and applications using TI components. To minimize the risks associated with Buyers’ products and applications, Buyers should provide adequate design and operating safeguards.

TI does not warrant or represent that any license, either express or implied, is granted under any patent right, copyright, mask work right, or other intellectual property right relating to any combination, machine, or process in which TI components or services are used. Information published by TI regarding third-party products or services does not constitute a license to use such products or services or a warranty or endorsement thereof. Use of such information may require a license from a third party under the patents or other intellectual property of the third party, or a license from TI under the patents or other intellectual property of TI.

Reproduction of significant portions of TI information in TI data books or data sheets is permissible only if reproduction is without alteration and is accompanied by all associated warranties, conditions, limitations, and notices. TI is not responsible or liable for such altered documentation. Information of third parties may be subject to additional restrictions.

Resale of TI components or services with statements different from or beyond the parameters stated by TI for that component or service voids all express and any implied warranties for the associated TI component or service and is an unfair and deceptive business practice. TI is not responsible or liable for any such statements.

Buyer acknowledges and agrees that it is solely responsible for compliance with all legal, regulatory and safety-related requirements concerning its products, and any use of TI components in its applications, notwithstanding any applications-related information or support that may be provided by TI. Buyer represents and agrees that it has all the necessary expertise to create and implement safeguards which anticipate dangerous consequences of failures, monitor failures and their consequences, lessen the likelihood of failures that might cause harm and take appropriate remedial actions. Buyer will fully indemnify TI and its representatives against any damages arising out of the use of any TI components in safety-critical applications.

In some cases, TI components may be promoted specifically to facilitate safety-related applications. With such components, TI’s goal is to help enable customers to design and create their own end-product solutions that meet applicable functional safety standards and requirements. Nonetheless, such components are subject to these terms.

No TI components are authorized for use in FDA Class III (or similar life-critical medical equipment) unless authorized officers of the parties have executed a special agreement specifically governing such use.

Only those TI components which TI has specifically designated as military grade or “enhanced plastic” are designed and intended for use in military/aerospace applications or environments. Buyer acknowledges and agrees that any military or aerospace use of TI components which have ***not*** been so designated is solely at the Buyer's risk, and that Buyer is solely responsible for compliance with all legal and regulatory requirements in connection with such use.

TI has specifically designated certain components as meeting ISO/TS16949 requirements, mainly for automotive use. In any case of use of non-designated products, TI will not be responsible for any failure to meet ISO/TS16949.

Products		**Applications**	
Audio	www.ti.com/audio	Automotive and Transportation	www.ti.com/automotive
Amplifiers	amplifier.ti.com	Communications and Telecom	www.ti.com/communications
Data Converters	dataconverter.ti.com	Computers and Peripherals	www.ti.com/computers
DLP® Products	www.dlp.com	Consumer Electronics	www.ti.com/consumer-apps
DSP	dsp.ti.com	Energy and Lighting	www.ti.com/energy
Clocks and Timers	www.ti.com/clocks	Industrial	www.ti.com/industrial
Interface	interface.ti.com	Medical	www.ti.com/medical
Logic	logic.ti.com	Security	www.ti.com/security
Power Mgmt	power.ti.com	Space, Avionics and Defense	www.ti.com/space-avionics-defense
Microcontrollers	microcontroller.ti.com	Video and Imaging	www.ti.com/video
RFID	www.ti-rfid.com		
OMAP Applications Processors	www.ti.com/omap	**TI E2E Community**	e2e.ti.com
Wireless Connectivity	www.ti.com/wirelessconnectivity		

Mailing Address: Texas Instruments, Post Office Box 655303, Dallas, Texas 75265
Copyright © 2016, Texas Instruments Incorporated