Modulo-2 Data Sheet

Modified: 9 August 2017

Afero Part Number: D-LIT-00029-00

REVISION	DATE	AUTHOR	CHANGE DESCRIPTION
0.5	07/07/17	BB	Initial draft
0.6	07/13/17	BB	Updated technical specs, updated some language, changed the ordering information
0.7	07/14/17	BB	Modified table 3.5
0.8	07/17/17	BB	Reworked table 3.5, added BT table, Added BT SIG information
0.9	07/18/17	BB	Added modified drawings, added fields in 3.1, 3.2, changed introduction paragraph
0.95	07/19/17	BB	Added pinout information
1.0	07/24/17	BB	Formal release
1.1	08/07/17	SB	Modified average power consumption specification
1.2	08/09/17	CDV	Corrected feature specifications

Contents

1. Introduction **3**
- 1.1 About Afero 3
- 1.2 Features 4
- 1.3 Block Diagram 5

2. Mechanical Specification **6**
- 2.1 Mechanical Drawing 6
- 2.2 Antenna Keep-Out 7
- 2.3 Pin Definition 8
- 2.4 Mechanical Characteristics 9

3. DC Electrical Specification **10**
- 3.1 Absolute Maximum Rating 10
- 3.2 Recommended Operating Conditions 10
- 3.3 Standard Test Conditions 10
- 3.4 Typical Power Consumption 11
- 3.5 GPIO DC Characteristics 12

4. RF Specification **13**
- 4.1 Wireless LAN Module Specifications 13
- 4.2 RF Characteristics for IEEE802.11b 13
- 4.3 RF Characteristics for IEEE802.11g 14
- 4.4 RF Characteristics for IEEE802.11n 15
- 4.5 Bluetooth® Low Energy (BLE) Characteristics 15

5. Environmental Specification **16**
- 5.1 Absolute Maximum Rating 16
- 5.2 Recommended Operating Conditions 16

6. Ordering Information **16**

7. Compliance Notices **17**
- 7.1 FCC Class B Notice 17
- 7.2 ICES Class B Notice – Avis NMB-003, Classe B 18
- 7.3 EU Declaration of Conformity 18
- 7.4 RoHS 18
- 7.5 WEEE 18

1. Introduction

Modulo-2 is a Wi-Fi and Bluetooth® low energy development board that makes it easy to prototype and build connected products used in conjunction with the Afero IoT Platform. It enables ultra-low power connectivity for data communication. The product integrates a Wi-Fi/Bluetooth radio, RF front-end, a microcontroller running the Afero custom firmware, security IC, and crystal into a small package. This is an ideal solution for Internet of Things (IoT) applications.

1.1 About Afero

Afero builds integrated hardware, software, and cloud services for IoT connectivity and data analytics. The Afero turnkey platform incorporates a secure wireless module, scalable cloud services, and a range of development tools that enable companies and developers to quickly prototype and build connected devices.

The Afero platform is vertically integrated, giving developers a solution that combines security and connectivity at the three key touch points for all connected devices:

- Product (embedded secure radio module)
- Mobile (app-level monitoring and control)
- Cloud (web API)

This vertical integration accelerates the creation of connected devices by minimizing the investment normally required for software development and testing -- while ensuring a secure and scalable solution.

The Afero Secure Radio module (Modulo-2, P/N A-FGS-00005-00) comes programmed with authentication, encryption, and connection management software, ensuring a reliable connection to the Afero Cloud. The Afero mobile application, available for both Android and iOS phones, allows users to manage their smart devices and services from their phone. Afero Dynamic Hub Technology further extends users' control over their devices by providing a secure network that connects wirelessly to the Afero Cloud using LTE.

© 2017 Afero, Inc.

1.2 Features

- Model name: Afero Modulo-2 Secure WLAN Radio Development Board
- Afero model number: Modulo-2
- WLAN type: 802.11 b/g/n 1x1
- WLAN radio frequencies: 2.4GHz
- Number of WLAN antennas: One (1)
- WLAN antenna configuration: Microstrip Monopole PCB antenna
- WLAN encryption: 64-bit WEP, 128-bit WEP, WPA-PSK, WPA2-PSK
- Bluetooth radio: Bluetooth® low energy wireless technology (4.0)
- Number of Bluetooth antennas: One (1) shared with WLAN
- Bluetooth antenna configuration: Shared with WLAN
- Bluetooth power level: 4dBm
- Maximum transmit power: 20dBm
- Receive sensitivity: -85dBm
- Power consumption: <500 mW (average)
- Security features: Cryptographic co-processor with secure, hardware-based key storage
- Host interface: UART, SPI, 3.3V CMOS
- Interface pins: Four (4) multifunction IOs
- Power (V_{CC}): 5VDC +10/-5%
- Operating temperature: 0 - +85C
- Storage temperature: -20 - +85C
- Operating humidity: 10-85% RH, non-condensing
- Storage humidity: 0-90% RH, non-condensing
- LED indicators: One (1)
- Buttons: One (1)
- Dimensions: 61.5mm x 17.8mm x 11.5mm (L x W x H)
- Weight (Earth ABL): 7g
- Package: 600 mil DIP form factor
- Compliance: FCC/IC, CE, TELEC
- Certifications: Bluetooth SIG

1.3 Block Diagram

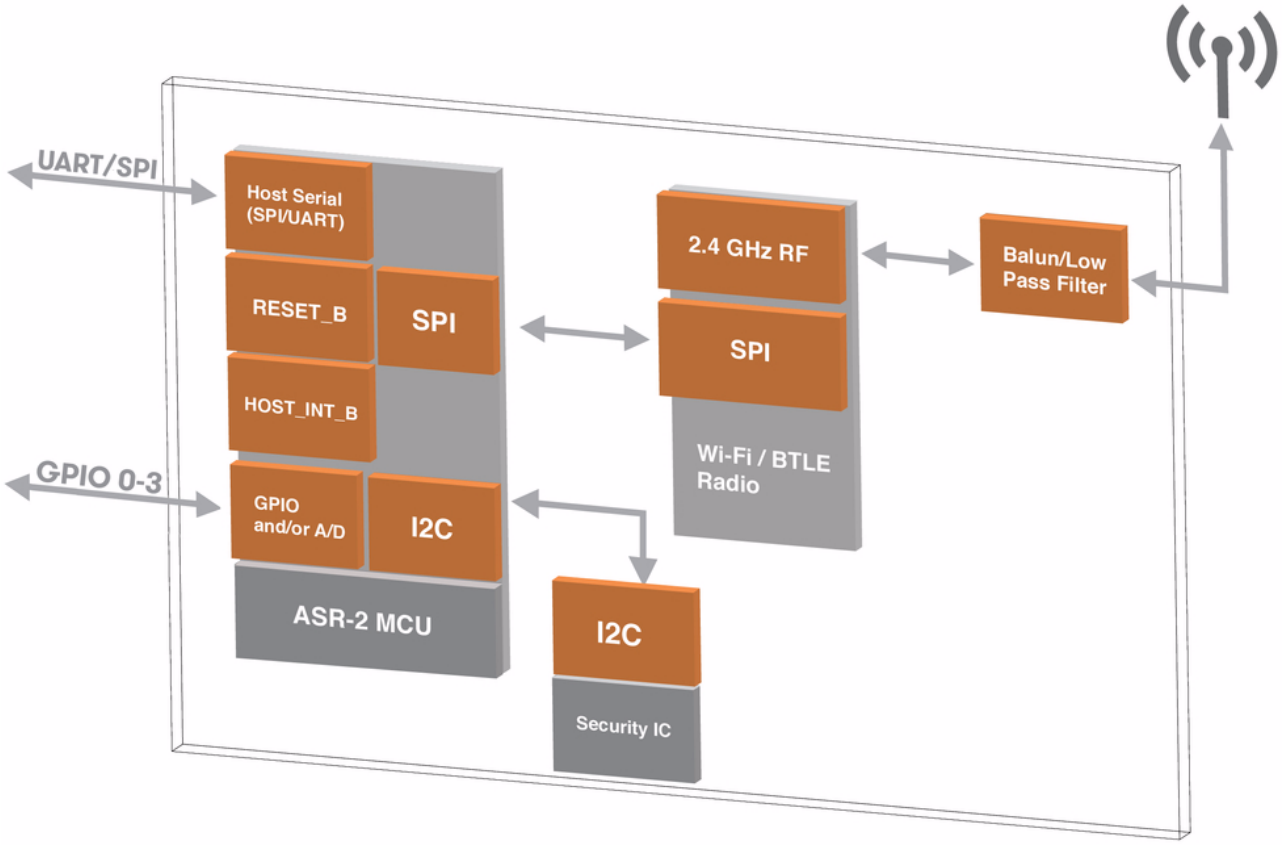

2. Mechanical Specification

2.1 Mechanical Drawing

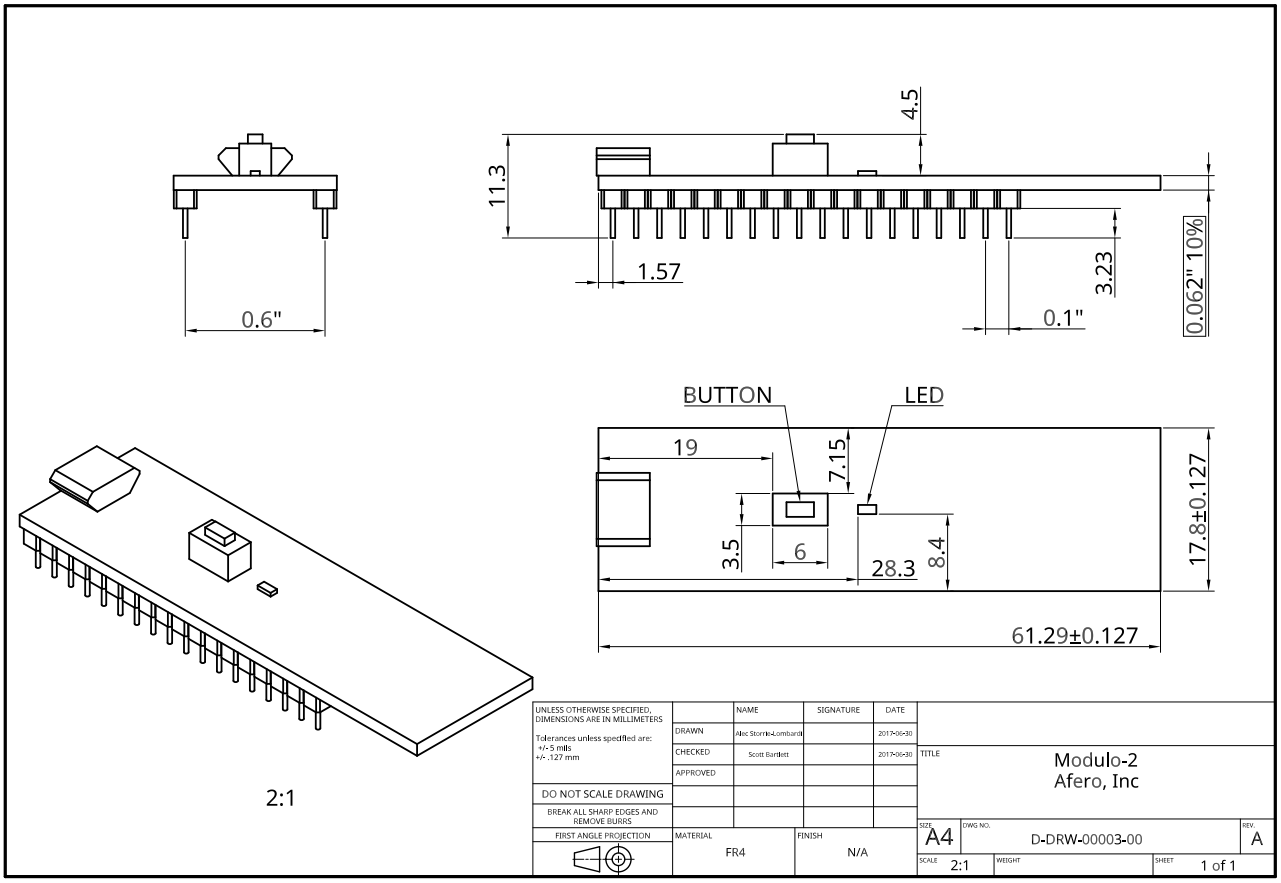

2.2 Antenna Keep-Out

To preserve antenna performance keep materials away from the antenna element. The dimensioned box shows an example antenna keepout region. Rule of thumb is to keep objects at least a quarter wave length away based on operating frequency. This antenna keepout extends in all 3 dimensions and is only represented here in 2 dimensions. Infringing on this keepout should be done with direction from an RF engineer to best retain RF performance.

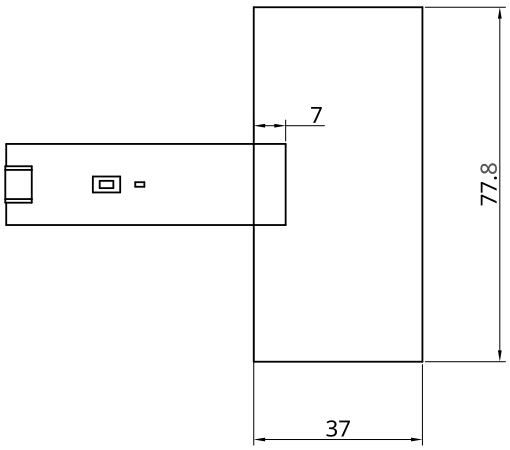

UNLESS OTHERWISE SPECIFIED, DIMENSIONS ARE IN MILLIMETERS		NAME	SIGNATURE	DATE
	DRAWN	Alec Stortis-Lombardi		2017-07-13
	CHECKED			
	APPROVED			
DO NOT SCALE DRAWING				
	MATERIAL		FINISH	

TITLE: Modulo-2 Antenna Keepout
Afero, Inc

SIZE: A4 | DWG NO.: ---- | REV.: -

SCALE: 2:1 | WEIGHT: | SHEET: 1 of 1

2.3 Pin Definition

PIN	NAME	DESCRIPTION	PIN	NAME	DESCRIPTION
1	GND	Ground (Square Pin)	19	IO0	General Purpose I/O
2	NC		20	IO1	General Purpose I/O
3	NC		21	IO2	General Purpose I/O
4	NC		22	IO3	General Purpose I/O
5	NC		23	HOST_SPI_CLK	SPI Clock
6	NC		24	HOST_INT	Host Interrupt Active Low
7	NC		25	NC	
8	NC		26	IO4	RESERVED
9	HOST_TX_MOSI	Host UART Transmit	27	IO5	RESERVED
10	HOST_RX_MISO	Host UART Receive	28	IO6	RESERVED
11	NC		29	IO7	RESERVED
12	HOST_CTS_SCS	Chip Select	30	NC	
13	HOST_TX_MOSI	Host SPI Transmit	31	RESET_B	Reset Active Low
14	HOST_RX_MISO	Host SPI Receive	32	NC	
15	VCC_3P3	Internal 3V3 LDO Power Rail	33	NC	
16	DBG_UART_TX	UART Transmit	34	NC	
17	DBG_UART_RX	UART Receive	35	NC	
18	GND	Ground	36	VCC_USB	External 5V USB Power Rail

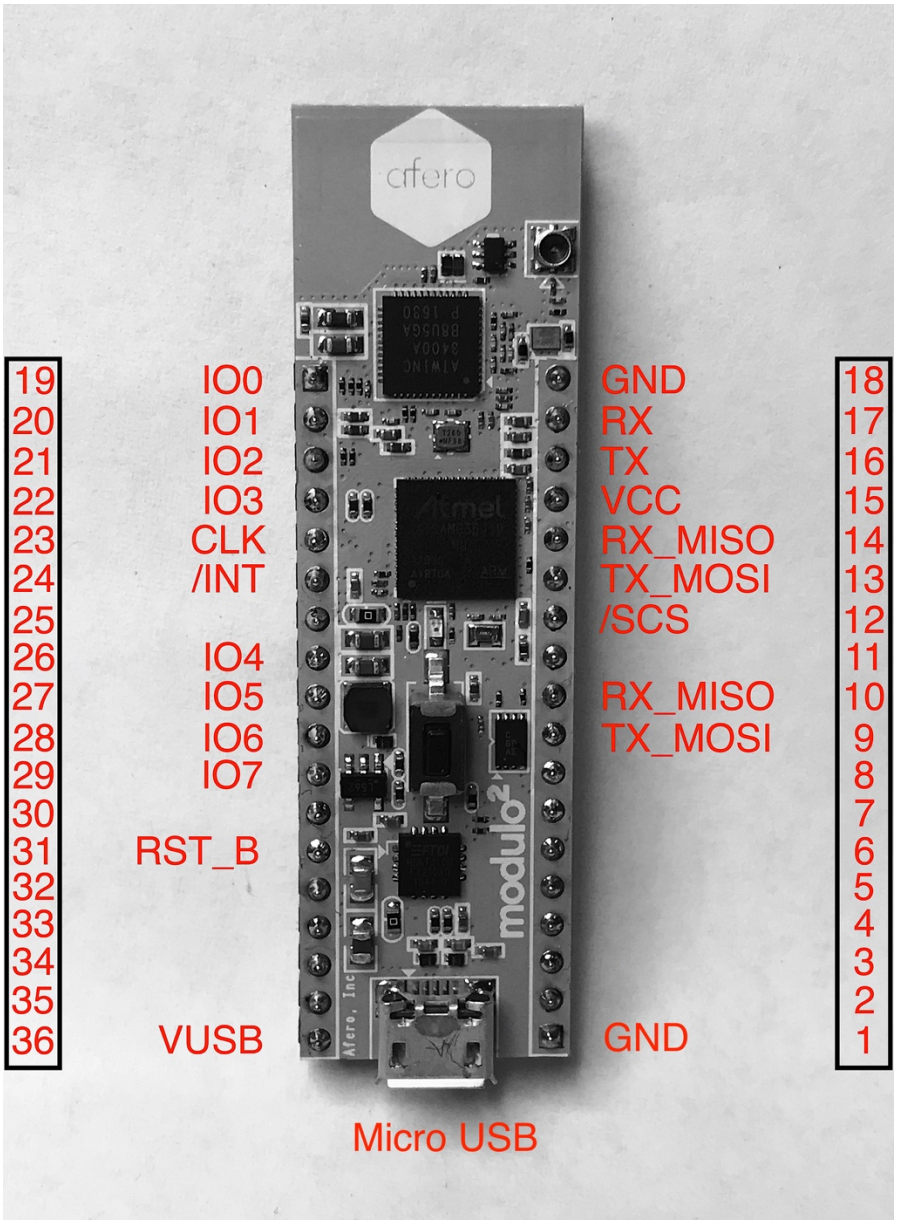

2.4 Mechanical Characteristics

ITEM	TEST CONDITIONS
Assembly	No defects of wiring, soldering and assembling
Appearance	No dirt, rust, corrosion, or foreign material
Mass	7g +/- 2g

3. DC Electrical Specification

3.1 Absolute Maximum Rating

DESCRIPTION	MIN	MAX	UNIT
V_{IN}	-0.3	+5.8	V
V_{CC}	-0.3	+4.0	V
I_{VCC} (3.3V Out)	550		mA

3.2 Recommended Operating Conditions

PARAMETER	MIN	MAX	UNIT
Operating Temperature Range	0	+85	°C
V_{IN}	+4.5	+5.5	V
V_{CC} (Supplied by internal regulator)	+3.0	+3.6	V
I_{VCC} (3.3V Out)		100	mA

3.3 Standard Test Conditions

Ambient Conditions: 25C +/- 5C, 65%RH +/- 10%

Power Supply: V_{IN} 5V +/- 5%

3.4 Typical Power Consumption

POWER CONSUMPTION	MIN	TYP	MAX	UNIT
TX Off		495		mW
TX Mode (1Mbps 11b)		1300		mW
TX Mode (11Mbps 11b)		1160		mW
TX Mode (6Mbps 11g)		1200		mW
TX Mode (54Mbps 11g)		935		mW
TX Mode (MCS0 11n)		1250		mW
TX Mode (MCS7 11n)		765		mW
RX Mode		475		mW
Typical Usage (appliance operation)		350		mW

3.5 GPIO DC Characteristics

SYMBOL	PARAMETER	CONDITIONS	MIN	TYP	MAX	UNIT
V_{IL}	Low-Level Input Voltage	All Pins	-0.3	-	0.3 x V_{VDDIO}	V
V_{IH}	High-Level Input Voltage	All Pins	0.7 x V_{VDDIO}	-	V_{VDDIO} + 0.3	V
V_{OL}	Low-Level Output Voltage	All Pins	-	-	0.4	V
V_{OH}	High-Level Output Voltage	All Pins	V_{VDDIO} - 0.4	-	-	V
V_{HYS}	Hysteresis Voltage	All Pins	0.15	-	-	mV
I_{OL}	Sink Current	V_{OL} = 0.4V				
		SPI_CLK_UC	-	-	6	mA
		All Others	-	-	2	
		NRST	-	-	4	
I_{OH}	Source Current	V_{OH} = V_{VDDIO} - 0.4V				
		SPI_CLK_UC	-	-	-6	mA
		All others	-	-	-2	
		NRST	-	-	-4	
I_{IL}	Low-Level Input Current	Pull-up OFF	-1	-	1	µA
		Pull-up ON	10	-	50	
I_{IH}	High-Level Input Current	Pull-down OFF	-1	-	1	µA
		Pull-down ON	10	-	50	
R_{PULLUP}	Pull-up Resistor	All Pins	70	100	140	kΩ
$R_{PULLDOWN}$	Pull-down Resistor	All Pins	70	100	140	kΩ

4. RF Specification

Conditions: 25°C, V_{IN}=5V, Parameters measured at RF connector.

4.1 Wireless LAN Module Specifications

WIRELESS LAN MODULE SPECIFICATIONS	
Model	Modulo-2
Frequency Range	2400 MHz to 2483 MHz
Output Power (Max)	IEEE 802.11b: 20dBm IEEE 802.11g: 17dBm IEEE 802.11n: 17dBm

4.2 RF Characteristics for IEEE802.11b

11Mbps mode unless otherwise specified.

ITEMS	CONTENTS			
Specification	IEEE802.11b			
Mode	DSSS/CCK			
Channel frequency	2400 – 2483 MHz			
Data rate	1, 2, 5.5, 11Mbps			
TX CHARACTERISTICS	MIN	TYP	MAX	UNIT
Total Radiated Power level	8	10	18	dBm
Spectrum mask				
1st side lobes (to fc ±11 MHz)		-36	-30	dBr
2nd side lobes (to fc ±22MHz)		-55	-50	dBr
Modulation Accuracy (EVM)		-18		dB
Frequency tolerance		5		ppm
RX CHARACTERISTICS	MIN	TYP	MAX	UNIT
Minimum input level sens. (TIS, PER ≤ 10%)		-85		dBm

4.3 RF Characteristics for IEEE802.11g

54Mbps mode unless otherwise specified.

ITEMS	CONTENTS			
Specification	IEEE802.11g			
Mode	OFDM			
Channel frequency	2400 – 2483 MHz			
Data rate	6, 9, 12, 18, 24, 36, 48, 54 Mbps			
TX CHARACTERISTICS	MIN	TYP	MAX	UNIT
Total Radiated Power level	8	10	15	dBm
Spectrum mask				
at fc ±11 MHz		-50	-20	dBr
to fc ±20MHz		-55	-28	dBr
to fc >= ±30MHz		-60	-45	dBr
Constellation Error (EVM)		-27	-25	dB
Frequency tolerance		5		ppm
Chip clock frequency tolerance		5		ppm
RX CHARACTERISTICS	MIN	TYP	MAX	UNIT
Minimum input level sens. (TIS, PER ≤ 10%)		-70		dBm

4.4 RF Characteristics for IEEE802.11n

MCS7 mode unless otherwise specified.

ITEMS	CONTENTS			
Specification	IEEE802.11n – 2.4GHz			
Mode	OFDM			
Channel frequency	2400 – 2483 MHz			
Data rate	6.5, 13, 19.5, 26, 39, 52, 58.5, 65 Mbps			
TX CHARACTERISTICS	MIN	TYP	MAX	UNIT
Total Radiated Power level	3	5	10	dBm
Spectrum mask (HT20)				
at fc ±11 MHz		-50	-20	dBr
to fc ±20MHz		-55	-28	dBr
to fc >= ±30MHz		-60	-45	dBr
Constellation Error (EVM)		-29	-27	dB
Frequency tolerance		5		ppm
Chip clock frequency tolerance		5		ppm
RX CHARACTERISTICS	MIN	TYP	MAX	UNIT
Minimum input level sens. (TIS, PER ≤ 10%)		-68		dBm

4.5 Bluetooth® Low Energy (BLE) Characteristics

ITEMS	MIN	TYP	MAX
Specification	Bluetooth® 4.0		
Mode	Bluetooth® Low Energy		
Frequency Range	2400 – 2483 MHz		
TX CHARACTERISTICS			
Power	-	0dBm	+4dBm
RX CHARACTERISTICS			
Receive Sensitivity	-	-93dBm	-

5. Environmental Specification

5.1 Absolute Maximum Rating

DESCRIPTION	MIN	MAX	UNIT
Storage temperature	-20	85	°C
Storage humidity	0	90	%RH
Operating temperature	0	85	°C
Operating humidity	10	85	%RH

5.2 Recommended Operating Conditions

PARAMETER	MIN	MAX	UNIT
Operating Temperature Range	0	85	°C

6. Ordering Information

MODULE	PART NUMBER	NOTES
Modulo-2	A-FGS-00005-00	Header pins installed

7. Compliance Notices

7.1 FCC Class B Notice

This device complies with Part 15 of the FCC Rules. Operation is subject to the following two conditions:

1. 1. This device may not cause harmful interference.
2. 2. This device must accept any interference received, including interference that may cause undesired operation.

Note: This equipment has been tested and found to comply with the limits for a Class B digital device, pursuant to Part 15 of the FCC Rules. These limits are designed to provide reasonable protection against harmful interference in a residential installation. This equipment generates, uses and can radiate radio frequency energy and, if not installed and used in accordance with the instructions, may cause harmful interference to radio communications. However, there is no guarantee that interference will not occur in a particular installation. If this equipment does cause harmful interference to radio or television reception, which can be determined by turning the equipment off and on, the user is encouraged to try to correct the interference by one or more of the following measures:

- Reorient or relocate the receiving antenna.
- Increase the separation between the equipment and receiver.
- Connect the equipment into an outlet on a circuit different from that to which the receiver is connected.
- Consult the dealer or an experienced radio/television technician for help.

Changes or modifications not expressly approved by the party responsible for compliance could void the user's authority to operate the equipment.

In order to comply with FCC radio frequency (RF) exposure limits, antennas should be located at a minimum of 7.9 inches (20 cm) or more from the body of all persons.

7.2 ICES Class B Notice – Avis NMB-003, Classe B

This Class B digital apparatus complies with Canadian ICES-003.

Cet appareil numérique de la classe B est conforme à la norme NMB-003 du Canada.

This device complies with Industry Canada's licence-exempt RSSs. Operation is subject to the following two conditions: (1) This device may not cause interference; and (2) This device must accept any interference, including interference that may cause undesired operation of the device.

Le présent appareil est conforme aux CNR d'Industrie Canada applicables aux appareils radio exempts de licence. L'exploitation est autorisée aux deux conditions suivantes : (1) l'appareil ne doit pas produire de brouillage, et (2) l'utilisateur de l'appareil doit accepter tout brouillage radioélectrique subi, même si le brouillage est susceptible d'en compromettre le fonctionnement.

7.3 EU Declaration of Conformity

Afero, Inc declares that Modulo-2, PN A-PCB-00028-00 complies with the essential requirements and other relevant provisions of Directive 2014/53/EU. A copy of the Declaration of conformity is available on request.

Afero, Inc
4970 El Camino Real
Suite 100
Los Altos, CA 94022

7.4 RoHS

This device conforms to RoHS (Restriction of Hazardous Substances) European Union regulations that set maximum concentration limits on hazardous materials used in electrical and electronic equipment.

7.5 WEEE

This product has been supplied from an environmentally aware manufacturer that complies with the Waste Electrical and Electronic Equipment (WEEE) Directive 2002/96/EC. The "crossed-out wheelie bin" symbol is placed on this product to encourage you to recycle wherever possible.

Afero reserves the right to make changes to the specifications and functionality of this product.