MZB600

Zero Bias Detector Diode

Rev. V1

Features

- Very Low Forward Voltage: 300 mV max. @ 1 mA
- Low Tangential Signal Sensitivity: -42 dBm
- Low Junction Capacitance: 0.2 pF
- High Breakdown Voltage: 3 V
- Available in Beam Lead, Multi-Junction Chip or Packaged
- RoHS* Compliant

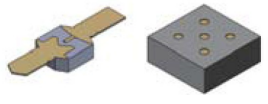

CS12 / B11 CS10 / C15P



CS32 CS19-6

Description

The MZB600 zero bias detector (ZBD) diode is a sensitive, very low barrier height Schottky diode designed for use in high frequency, low input power detectors. Its very low barrier height results in excellent sensitivity to very small signals without the need for external bias current. This diode is available as a five-junction common-anode chip, as a single-junction beam lead or packaged in one of several suitable packages. It is manufactured using a proven diode fabrication process which optimizes diode characteristics for optimal electrical performance and excellent reliability.

The low junction capacitance (0.2 pF typical) enables the device to be used in sensitive detector circuits with input signals up to 20 GHz.

This rugged device is capable of reliable operation in all military, commercial and industrial applications.

Ordering Information[1]

Part Number	Package
MZB600-C15P-W	chip (400 pc. waffle pack)
MZB600-B11-GP	beam lead (100 pc. GelPak™)
MZB600-19-6-W	CS19-6 (100 pc. waffle pack)
MZB600-19-6-R	CS19-6 (3000 pc. Reel)
MZB600-32-W	CS32 (100 pc. waffle pack)

1. Contact the factory for other packaging options.

Electrical Specifications: T_A = +25°C

Parameter	Test Conditions	Unit	Min.	Typ.	Max.
Breakdown Voltage (V_B)	I_R = 100 µA	V	3	—	—
Forward Voltage (V_F)	I_F = 1 mA	mV	—	—	300
Video Resistance (R_V)	I_F = 75 mA, 1 GHz	Ω	—	3500	—
Junction Capacitance (C_J)	V_R = 0 V, 1 MHz	pF	—	0.2	—

MACOM Technology Solutions Inc. (MACOM) and its affiliates reserve the right to make changes to the product(s) or information contained herein without notice.
Visit www.macom.com for additional data sheets and product information.

For further information and support please visit:
https://www.macom.com/support

Zero Bias Detector Diode

Rev. V1

Absolute Maximum Ratings

Parameter	Absolute Maximum
Forward DC Current	100 mA
Reverse DC Voltage	3 V
Total Dissipated Power[2]	100 mW
Junction Temperature	+150°C
Operating Temperature	-55°C to +150°C
Storage Temperature	-65°C to +200°C

2. Infinite heat sink, T_C = 25°C. Derate power linearly from 750 mW @ 85°C to 0 W @ 175°C.

Environmental Capabilities

The MZB600 ZBD Diode is capable of meeting the environmental requirements of MIL-STD-750 and MIL-STD-883.

ESD & Moisture Sensitivity Level Rating

These electronic devices are sensitive to electrostatic discharge (ESD) and can be damaged by static electricity. Proper ESD prevention procedures should be followed. The ESD rating for this device is Class 0 (HBM).

Assembly Instructions

Die attach of the common anode chip diodes may be accomplished with eutectic solders, such as 80 Au / 20 Sn, or conductive epoxy. The leads of the beam lead device may be attached to a hybrid circuit using thermo compression bonding or conductive epoxy.

CS10 / C15P

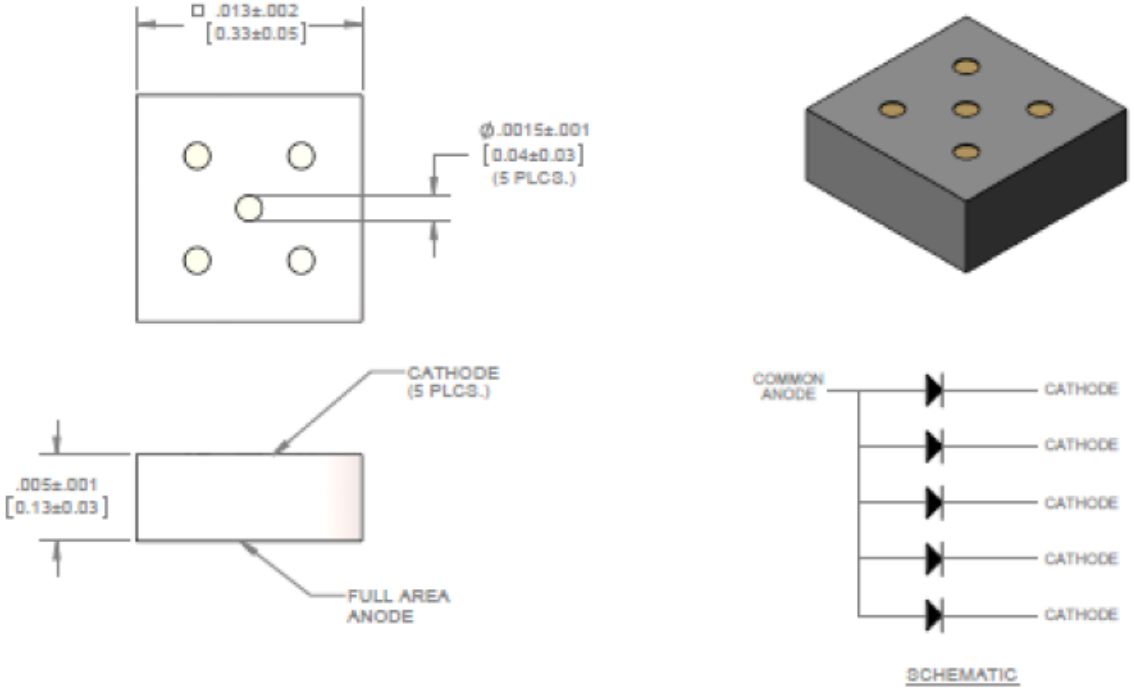

MACOM Technology Solutions Inc. (MACOM) and its affiliates reserve the right to make changes to the product(s) or information contained herein without notice.
Visit www.macom.com for additional data sheets and product information.

For further information and support please visit:
https://www.macom.com/support

CS12 / B11

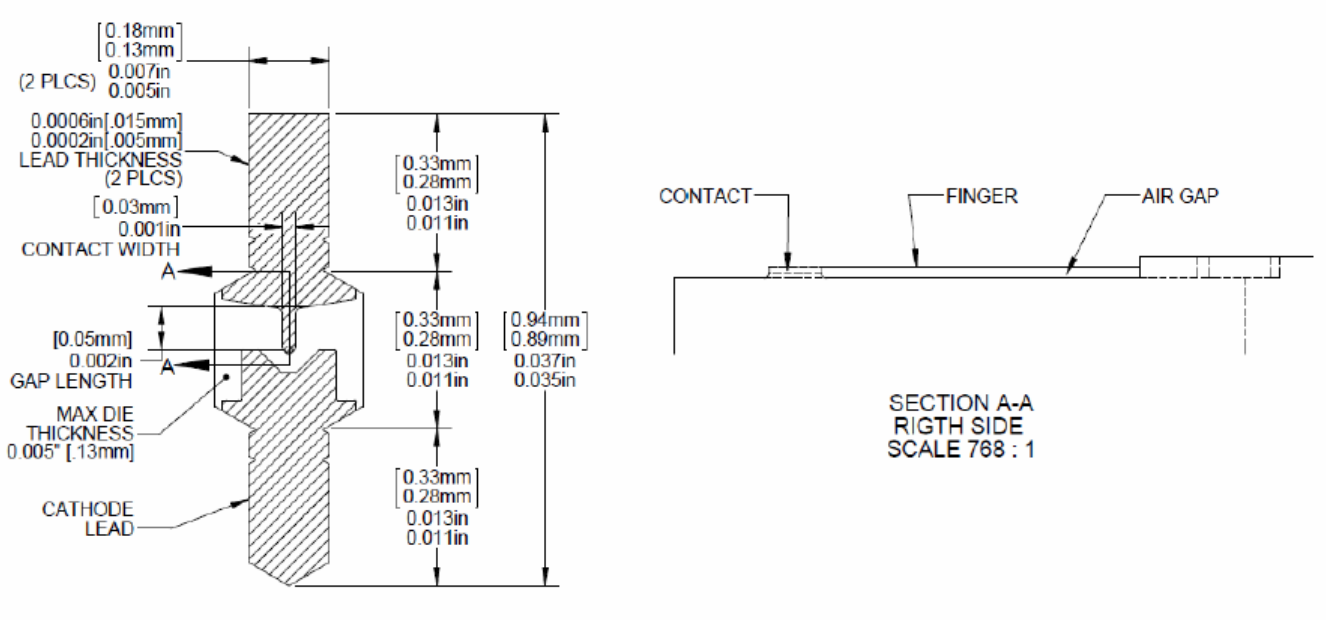

CS32

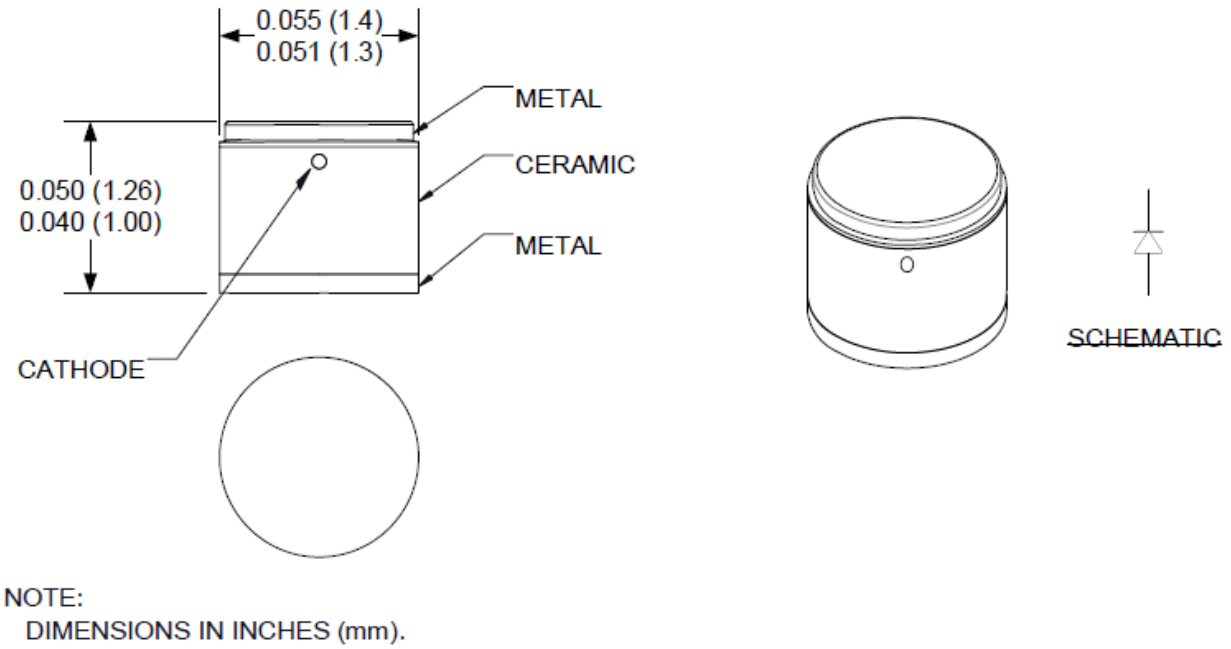

NOTE:
DIMENSIONS IN INCHES (mm).

MACOM Technology Solutions Inc. (MACOM) and its affiliates reserve the right to make changes to the product(s) or information contained herein without notice.
Visit www.macom.com for additional data sheets and product information.

For further information and support please visit:
https://www.macom.com/support

CS19-6

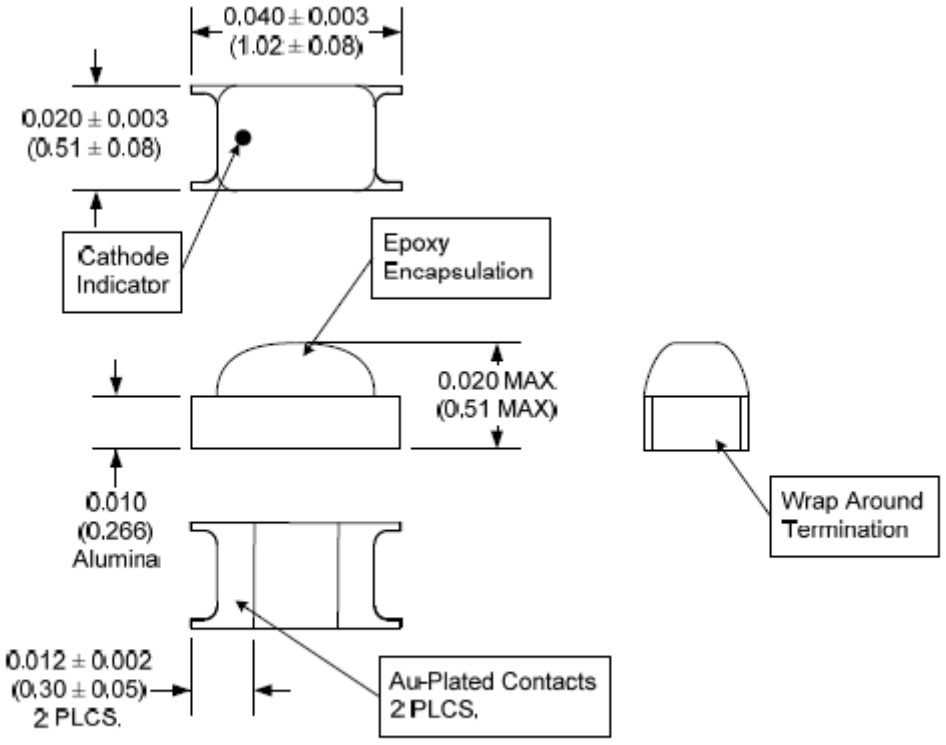

Dimensions in inches (mm)

MACOM Technology Solutions Inc. (MACOM) and its affiliates reserve the right to make changes to the product(s) or information contained herein without notice.
Visit www.macom.com for additional data sheets and product information.

For further information and support please visit:
https://www.macom.com/support

MACOM Technology Solutions Inc. All rights reserved.

Information in this document is provided in connection with MACOM Technology Solutions Inc ("MACOM") products. These materials are provided by MACOM as a service to its customers and may be used for informational purposes only. Except as provided in MACOM's Terms and Conditions of Sale for such products or in any separate agreement related to this document, MACOM assumes no liability whatsoever. MACOM assumes no responsibility for errors or omissions in these materials. MACOM may make changes to specifications and product descriptions at any time, without notice. MACOM makes no commitment to update the information and shall have no responsibility whatsoever for conflicts or incompatibilities arising from future changes to its specifications and product descriptions. No license, express or implied, by estoppels or otherwise, to any intellectual property rights is granted by this document.

THESE MATERIALS ARE PROVIDED "AS IS" WITHOUT WARRANTY OF ANY KIND, EITHER EXPRESS OR IMPLIED, RELATING TO SALE AND/OR USE OF MACOM PRODUCTS INCLUDING LIABILITY OR WARRANTIES RELATING TO FITNESS FOR A PARTICULAR PURPOSE, CONSEQUENTIAL OR INCIDENTAL DAMAGES, MERCHANTABILITY, OR INFRINGEMENT OF ANY PATENT, COPYRIGHT OR OTHER INTELLECTUAL PROPERTY RIGHT. MACOM FURTHER DOES NOT WARRANT THE ACCURACY OR COMPLETENESS OF THE INFORMATION, TEXT, GRAPHICS OR OTHER ITEMS CONTAINED WITHIN THESE MATERIALS. MACOM SHALL NOT BE LIABLE FOR ANY SPECIAL, INDIRECT, INCIDENTAL, OR CONSEQUENTIAL DAMAGES, INCLUDING WITHOUT LIMITATION, LOST REVENUES OR LOST PROFITS, WHICH MAY RESULT FROM THE USE OF THESE MATERIALS.

MACOM products are not intended for use in medical, lifesaving or life sustaining applications. MACOM customers using or selling MACOM products for use in such applications do so at their own risk and agree to fully indemnify MACOM for any damages resulting from such improper use or sale.