MICRO ELECTRONICS

MYB120DA-X

ULTRA HIGH BRIGHTNESS YELLOW LED LAMP

DESCRIPTION

MYB120DA-X is ultra high brightness output AlGaInP yellow LED lamp encapsulated in a 12mm diameter large package, yellow diffused lens with 3 brightness grouping is provided for customer's selection.

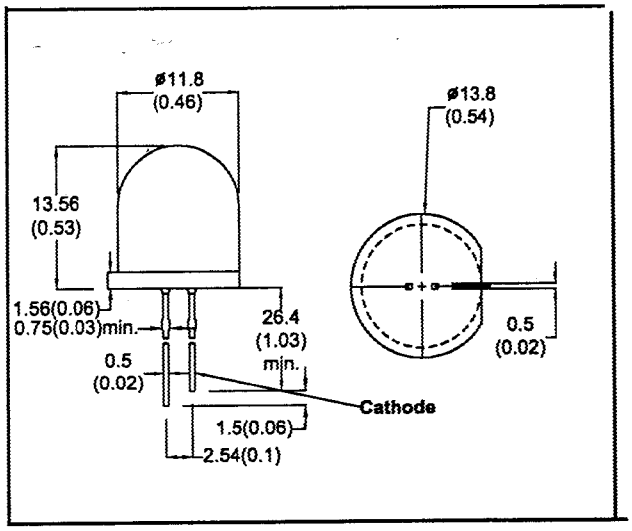

- All dimension in mm(inch)
- No Scale
- Tol. : +/-0.3mm

ABSOLUTE MAXIMUM RATINGS

Power Dissipation @ Ta=25°C	100mW
Forward Current, DC (IF)	40mA
Reverse Voltage	5V
Operating & Storage Temperature Range	-55 to +100°C
Lead Soldering Temperature (1/16" form body)	260°C for 5 sec.

ELECTRO-OPTICAL CHARACTERISTICS (Ta=25°C)

PARAMETER	SYMBOL	MIN	TYP	MAX	UNIT	CONDITIONS
Forward Voltage	VF		2	**3**	V	IF=20mA
Reverse Breakdown Voltage	BVR	5			V	IR=100μA
Luminous Intensity	IV					
-1		40	70		mcd	IF=20mA
-2		70	100		mcd	IF=20mA
-3		100	125		mcd	IF=20mA
Peak Wavelength	λp		595		nm	IF=20mA
Spectral Line Half Width	Δλ		15	20	nm	IF=20mA
Viewing Angle	2θ 1/2		66		degree	IF=20mA

MICRO ELECTRONICS LTD.
38, Hung To Road, Microtron Bulding, Kwun Tong, Kowloon, Hong Kong.
Kwun Tong P.O. Box 69477 Hong Kong. Fax No. 2341 0321 Telex:43510 Micro Hx. Tel: 2343 0181-5