MX•COM, INC. MiXed Signal ICs

DATA BULLETIN

MX316 NMT Audio Filter Array

FEATURES:

- **12th Order Lowpass Filter for S.A.T.* Rejection**
- **4 KHz S.A.T. Recovery Bandpass Filter**
- **Low Group Delay Distortion**
- **Single 5V CMOS Power Requirement**

APPLICATIONS:

- **Nordic Mobile Telephone (NMT) 450/900 MHz Mobile and Base Specifications**

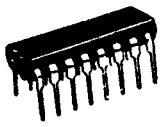

MX316J (CDIP)
MX316P (PDIP)
16 pins

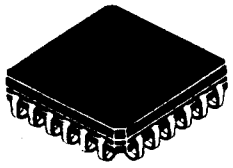

MX316LH
(24p PLCC)

DESCRIPTION:

The MX316 is a low power CMOS switched capacitor filter array designed to meet Nordic Mobile Telephone base and mobile specifications. As depicted in Figure 1, the device is comprised of:

1) a 12th order, 3.4 KHz lowpass filter which meets NMT 450 and 900 MHz base and mobile filter response specifications. Group delay distortion is minimized through this filter.
2) a 6th order, 4 KHz narrow bandpass filter which meets NMT 450 and 900 MHz S.A.T. recovery specifications.
3) an uncommitted amplifier, which may be used for a variety of applications, such as pre-emphasis, de-emphasis, and buffering.

An on-chip oscillator is driven by a 1 MHz crystal and provides all reference clocks for the switched capacitor filters via a divider chain. Alternatively, an external clock may be used. In standby mode, the chip enable feature is used to disable the three circuit elements.

*Supervisory Audio Tone

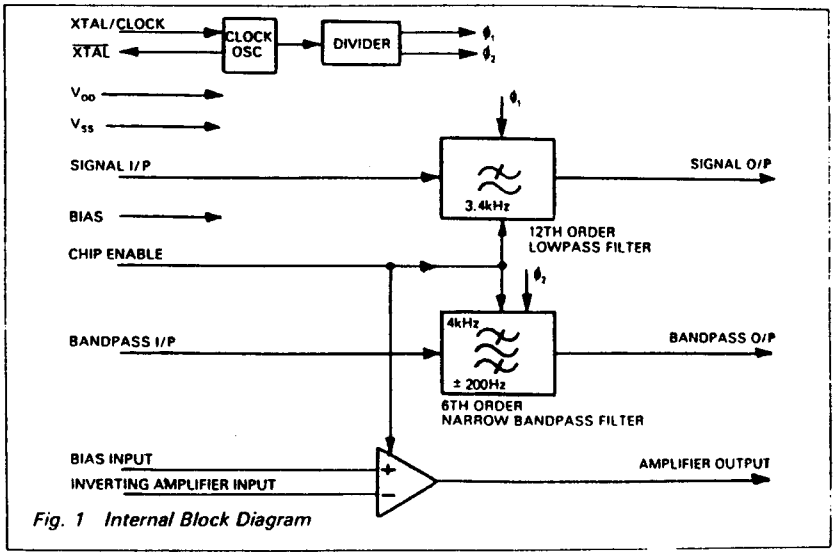

Fig. 1 Internal Block Diagram

© 1997 MX•COM, INC.
www.mxcom.com Tele: 800 638 5577 910 744 5050 Fax: 910 744 5054
4800 Bethania Station Road, Winston-Salem, NC 27105-1201 USA
Doc. # 20480166.001
All trademarks and service marks are held by there respective companies.

MX316 PIN FUNCTION TABLE

PIN		FUNCTION	DESCRIPTION
MX316J MX316P	MX316LH		
1	1	**Xtal/Clock**	Connect 1 MHz crystal or externally derived clock to this input. Drives the on-chip inverting oscillator.
2	2	**$\overline{\text{Xtal}}$**	1 MHz crystal O/P. Inverting output of on-chip oscillator.
3	5	**Chip Enable**	Internally pulled to V_{dd}. A logic "0" applied to this pin will disable all filters and the uncommitted amplifier (powersave).
4	6	**Signal I/P**	Input to the lowpass filter. This input is internally biased and externally a.c. coupled by C2.
5	7	**Signal O/P**	Lowpass filter output internally biased to $V_{dd}/2$.
6	8	**V_{ss}**	Negative supply voltage
7	10	**BP I/P**	Input to bandpass filter. Internally biased and externally a.c. coupled by C3.
8	12	**V_{ss}**	Negative supply voltage
9	13	**BP O/P**	Bandpass filter output. Internally biased to $V_{dd}/2$.
10	14	**Bias**	$V_{dd}/2$ Bias Pin. Externally decoupled by C5 (see fig. 2, note 1).
11	17	**Amp O/P**	Uncommitted amplifier output
12	18	**Amp I/P**	Uncommitted amplifier inverting input
13	19	**Bias I/P**	Connect externally to "Bias" pin.
14	20	**N/C**	Internally connected. Leave open circuit.
15	23	**N/C**	Internally connected. Leave open circuit.
16	24	**V_{dd}**	Positive supply voltage

Note: MX316LH pin numbers 3,4,9,11,15,16,21, and 22 are not connected.

© 1997 MX•COM, INC.
www.mxcom.com Tele: 800 638 5577 910 744 5050 Fax: 910 744 5054
4800 Bethania Station Road, Winston-Salem, NC 27105-1201 USA

All trademarks and service marks are held by there respective companies.

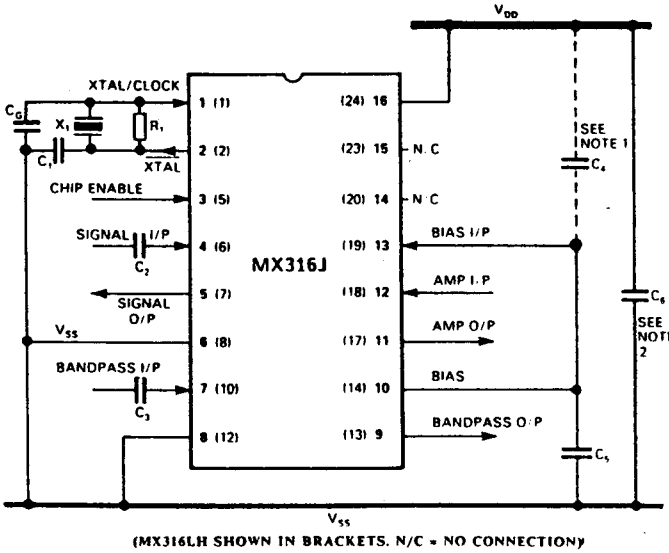

Component References		
Component	Typical Unit Value	
R_1	1M	10%
C_1	33p	20%
C_2	0.1µ	20%
C_3	0.1µ	20%
C_4	0.1µ	20%
C_5	0.1µ Min.	20%
C_6	0.1µ	20%
C_G	68p	20%
X_1	1MHz	

NOTES:
1. *Bias may be decoupled to V_{SS} and V_{DD} using C_4. C_5 when input signals are referenced to the bias pin. For input signals referenced to V_{SS}, decouple Bias to V_{SS} using C_5 only.*
2. *Use C_6 when input signals are referenced to V_{SS}, to decouple V_{DD}.*

Fig. 2 External Component Connections

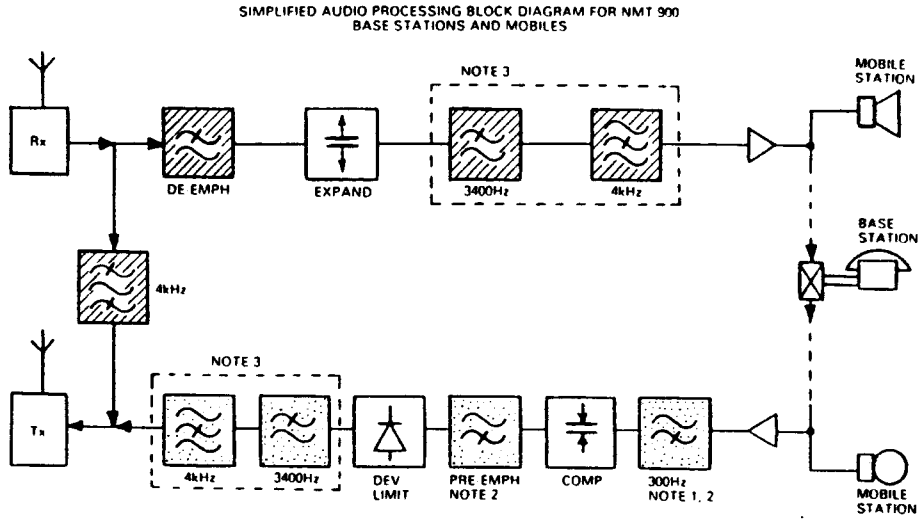

NOTES:
1). Not required in base station.
2). Pre-emph and highpass filter may be constructed using on-chip amplifier.
3). MX316 Lowpass Filter achieves both these functions.

MX316 (DEVICE A) MX316 (DEVICE B) BASE STATION ONLY

FIG. 3: MX316 TYPICAL APPLICATION

© 1997 MX•COM, INC.
www.mxcom.com Tele: 800 638 5577 910 744 5050 Fax: 910 744 5054
4800 Bethania Station Road, Winston-Salem, NC 27105-1201 USA
Doc. # 20480166.001
All trademarks and service marks are held by there respective companies.

MX316 ELECTRICAL SPECIFICATIONS

Absolute Maximum Ratings

Exceeding the maximum rating can result in device damage. Operation of the device outside the operating limits is not implied.

Supply voltage		−0.3V to 7.0V
Input voltage at any pin (ref V_{SS} = 0V)		−0.3V to (V_{DD} + 0.3V)
Output sink/source current (total)		20mA
Operating temperature range:	MX316J	−30°C to +85°C
	MX316LH, MX316P	−30°C to +70°C
Storage temperature range:	MX316J	−55°C to +125°C
	MX316LH, MX316P	−40°C to +85°C
Maximum device dissipation:		All versions 100mW

Operating Limits

All characteristics measured using the following parameters unless otherwise specified:
V_{DD} = 5V, T_{amb} = 25°C, Ø = 1MHz, $\Delta t_{Ø}$ = 0, f_{in} = 1kHz.

Characteristics		See Note	Min	Typ	Max	Unit
Static Characteristics						
Supply voltage			4.5	5	5.5	V
Supply current (Enabled)			—	6.0		mA
Supply current (Disabled)			—	700		µA
Input impedance (Filters & Amplifier)			100	1000	—	kΩ
Output impedance (Filters)			—	3	—	kΩ
Output impedance (Amplifier open loop)			—	800	—	Ω
Output impedance (Amplifier closed loop)			—	6	—	Ω
Input logic '1'			3.5	—	—	V
Input logic '0'			—	—	1.5	V
Dynamic Characteristics						
Passband Ripple	(300-3000Hz) LP	5	—	—	2	dB
	(4kHz ± 55Hz) BP	5	—	—	2	dB
Cut off frequency	(−3dB) LP	4,5	3000	3450	3800	Hz
	(−6dB) BP	4,5	4200	—	3800	Hz
Attenuation	(3800-4200Hz) LP	4,5	36	46	—	dB
	(<2000Hz,>6000Hz) BP	4,5	35	37	—	dB
Group Delay Distortion	(900-2100Hz) LP		—	80	—	µs
	(600-3000Hz) LP		—	450	—	µs
Output Noise (rms)	LP	1	—	1.6	—	mV
	BP	1	—	1	—	mV
Signal Input (rms)	LP	2	—	0.4	1.0	V
	BP	2	—	0.4	1.0	V
Insertion loss (1kHz)	LP		—	0	—	dB
(4kHz)	BP		—	0	—	dB
Aliasing Frequency			50	—	—	kHz
Inverting Amplifier						
Open loop gain		3	—	30	—	dB
Gain bandwidth product			—	1	—	MHz

Note: *1. Measured with input a.c. s/c.*
2. 'MAX' figure specified for nominal 3% distortion (30dB SINAD).
'TYP' figure specified for minimum distortion (MAX SINAD).
3. Relative to 1kHz. 100mV rms input level.
4. Refer to Figs. 4 and 5.
5. Specified over the full operating voltage and temperature range.

© 1997 MX•COM, INC. www.mxcom.com Tele: 800 638 5577 910 744 5050 Fax: 910 744 5054 Doc. # 20480166.001
4800 Bethania Station Road, Winston-Salem, NC 27105-1201 USA All trademarks and service marks are held by there respective companies.

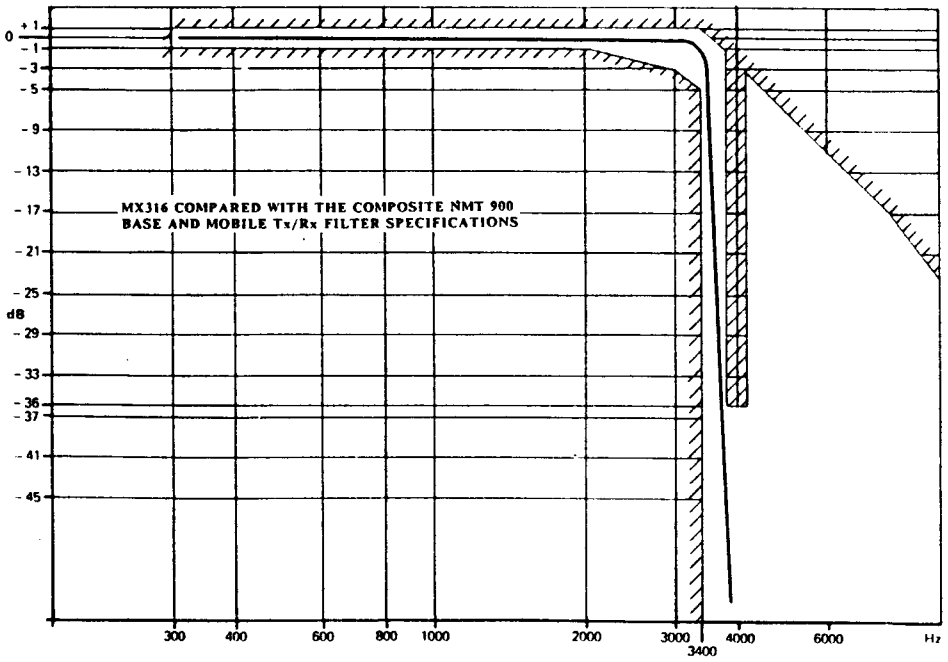

FIG. 4: TYPICAL MX316 LOWPASS FILTER RESPONSE

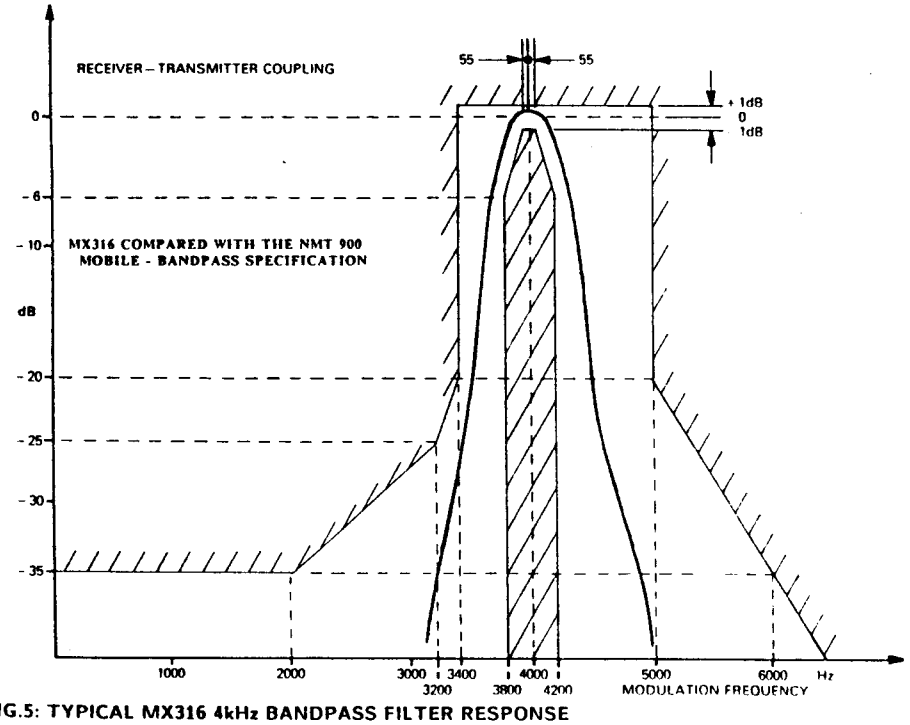

FIG.5: TYPICAL MX316 4kHz BANDPASS FILTER RESPONSE

© 1997 MX•COM, INC. www.mxcom.com Tele: 800 638 5577 910 744 5050 Fax: 910 744 5054 Doc. # 20480166.001
4800 Bethania Station Road, Winston-Salem, NC 27105-1201 USA All trademarks and service marks are held by there respective companies.

Packaging

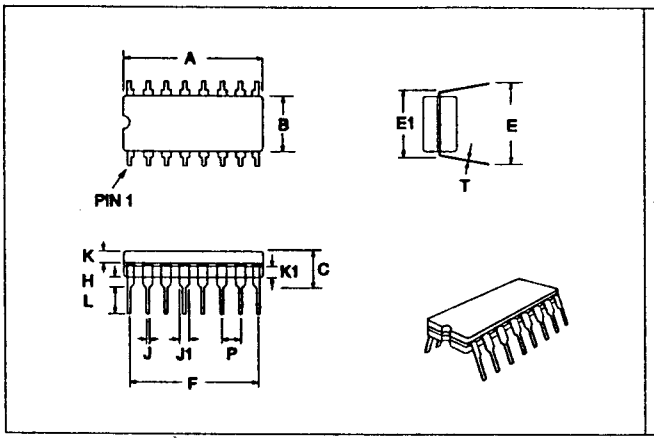

Package Tolerances

DIM.	MIN.	TYP.	MAX.
A	0.753 (19.13)		0.767 (19.48)
B	0.285 (7.24)		0.291 (7.39)
C	0.165 (4.19)		0.230 (5.84)
E	0.370 (9.40)		0.415 (10.53)
E1	0.300 (7.61)		0.317 (8.04)
F		0.70 (17.78)	
H		0.020 (0.51)	
J		0.018 (0.46)	
J1		0.055 (1.39)	
K	0.053 (1.33)		0.080 (2.03)
K1	0.075 (1.91)		0.080 (2.03)
L	0.115 (2.92)		0.200 (5.08)
P		0.100 (2.54)	
T	0.0098 (0.249)		0.0102 (0.259)

NOTE : All dimensions in inches (mm.)
Angles are in degrees

Figure 6: 16-pin CDIP Mechanical Outline: order as part no. MX316P

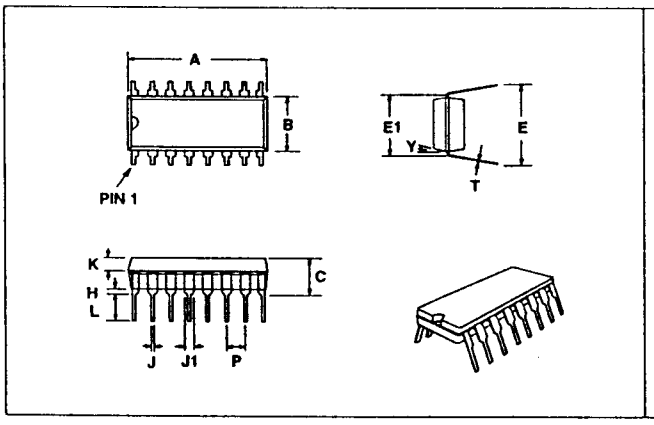

Package Tolerances

DIM.	MIN.	TYP.	MAX.
A	0.740 (18.80)		0.810 (20.57)
B	0.240 (6.10)		0.262 (6.63)
C	0.135 (3.43)		0.200 (5.06)
E	0.300 (7.62)		0.390 (9.91)
E1	0.290 (7.37)		0.325 (8.26)
H	0.015 (0.38)		0.070 (1.77)
J	0.014 (0.35)		0.023 (0.58)
J1	0.040 (1.02)		0.065 (1.65)
K	0.056 (1.42)		0.064 (1.63)
L	0.121 (3.07)		0.150 (3.81)
P		0.100 (2.54)	
T	0.008 (0.20)		0.015 (0.38)
Y		7°	

NOTE : All dimensions in inches (mm.)
Angles are in degrees

Figure 7: 16-pin PDIP Mechanical Outline: order as part no. MX316P

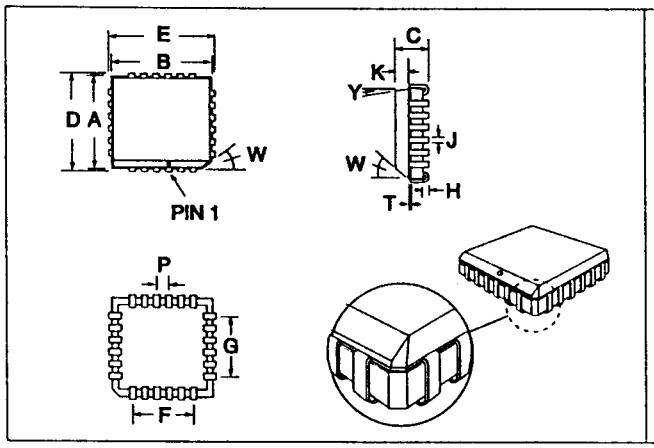

Package Tolerances

DIM.	MIN.	TYP.	MAX.
A	0.380 (9.61)		0.409 (10.40)
B	0.380 (9.61)		0.409 (10.40)
C	0.128 (3.25)		0.146 (3.70)
D	0.417 (10.60)		0.435 (11.05)
E	0.417 (10.60)		0.435 (11.05)
F		0.250 (6.35)	
G		0.250 (6.35)	
H		0.023 (0.58)	
J	0.018 (0.45)		0.022 (0.55)
K	0.047 (1.19)		0.048 (1.22)
P	0.049 (1.24)		0.051 (1.30)
T	0.006 (0.152)		0.009 (0.22)
W	30°	45°	
Y		6°	

NOTE : All dimensions in inches (mm.)
Angles are in degrees

Figure 8: 24-pin PLCC Mechanical Outline: order as part no. MX316LH

© 1997 MX•COM, INC.
www.mxcom.com Tele: 800 638 5577 910 744 5050 Fax: 910 744 5054
4800 Bethania Station Road, Winston-Salem, NC 27105-1201 USA
All trademarks and service marks are held by there respective companies.

CML Microcircuits

COMMUNICATION SEMICONDUCTORS

CML Product Data

In the process of creating a more global image, the three standard product semiconductor companies of CML Microsystems Plc *(Consumer Microcircuits Limited (UK), MX-COM, Inc (USA) and CML Microcircuits (Singapore) Pte Ltd)* have undergone name changes and, whilst maintaining their separate new names *(CML Microcircuits (UK) Ltd, CML Microcircuits (USA) Inc and CML Microcircuits (Singapore) Pte Ltd*), now operate under the single title **CML Microcircuits**.
These companies are all 100% owned operating companies of the CML Microsystems Plc Group and these changes are purely changes of name and do not change any underlying legal entities and hence will have no effect on any agreements or contacts currently in force.

CML Microcircuits Product Prefix Codes

Until the latter part of 1996, the differentiator between products manufactured and sold from MXCOM, Inc. and Consumer Microcircuits Limited were denoted by the prefixes MX and FX respectively. These products use the same silicon etc. and today still carry the same prefixes. In the latter part of 1996, both companies adopted the common prefix: CMX.

This notification is relevant product information to which it is attached.

CML Microcircuits (USA) [formerly MX-COM, Inc.] Product Textual Marking

On CML Microcircuits (USA) products, the **'MX-COM'** textual logo is being replaced by a **'CML'** textual logo.

Company contact information is as below:

CML Microcircuits (UK) Ltd
COMMUNICATION SEMICONDUCTORS

Oval Park, Langford, Maldon,
Essex, CM9 6WG, England
Tel: +44 (0)1621 875500
Fax: +44 (0)1621 875600
uk.sales@cmlmicro.com
www.cmlmicro.com

CML Microcircuits (USA) Inc.
COMMUNICATION SEMICONDUCTORS

4800 Bethania Station Road,
Winston-Salem, NC 27105, USA
Tel: +1 336 744 5050,
0800 638 5577
Fax: +1 336 744 5054
us.sales@cmlmicro.com
www.cmlmicro.com

CML Microcircuits (Singapore) Pte Ltd
COMMUNICATION SEMICONDUCTORS

No 2 Kallang Pudding Road, 09-05/
06 Mactech Industrial Building,
Singapore 349307
Tel: +65 7450426
Fax: +65 7452917
sg.sales@cmlmicro.com
www.cmlmicro.com

D/CML (D)/2 May 2002