T-1 3/4 (ƒ 5mm) PACKAGE
HIGH POWER AlInGaP LED LAMPs MVL-5A4UYL

Description

The MVL-5A4UYL , utilizes the latest absorbing substrate Aluminum Indium Gallium Phosphide (AlInGaP) LED technology. This LED material has outstanding light output efficiency over a wide range of drive current.

The package is T-1 3/4 (5mm) water clear standard type.

Package Dimensions

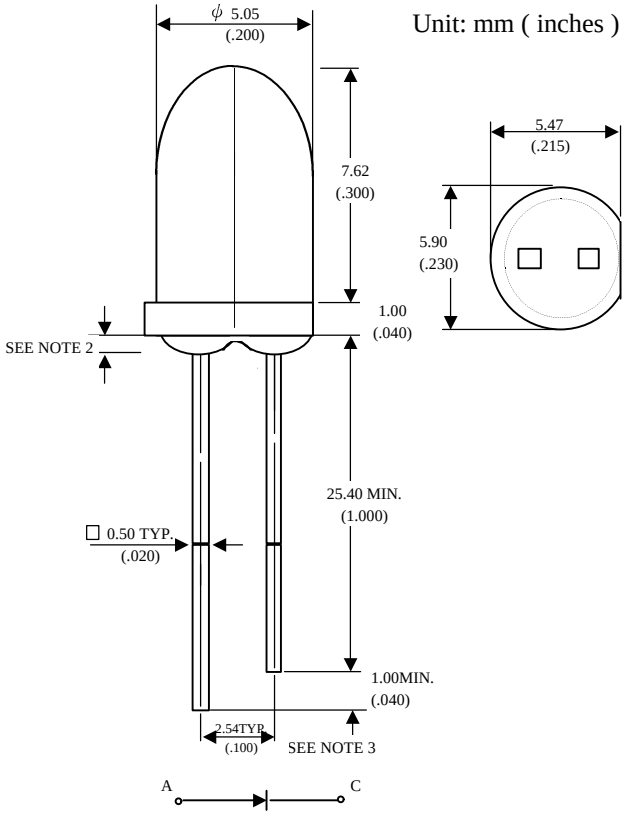

Notes :
1. Tolerance is ±0.25 mm (.010") unless otherwise noted.
2. Protruded resin under flange is 1.5 mm (.059") max.
3. Lead spacing is measured where the leads emerge from the package.

Features

- Ultra - brightness
- Low power consumption
- TTL compatible
- Reliable

Absolute Maximum Ratings

@ T_A=25°C

Parameter	Symbol	Maximum Rating	Unit
Power Dissipation	P_{ad}	125	mW
Peak Forward Current(1/10 Duty Cycle100μs pulse width)	I_{pf}	100	mA
Continuous Forward Current	I_{af}	50	mA
Reverse Voltage	V_R	5	V
Operating Temperature Range	T_{opr}	-40°C to +100°C	
Storage Temperature Range	T_{stg}	-40°C to +100°C	
Lead Soldering Temperature 1.6 mm from body for 5 seconds at 260°C			

Optical-Electrical Characteristics

@ T_A=25°C

Parameter	Test Conditions	Symbol	Min .	Typ .	Max .	Unit .
Luminous Intensity	I_F=20mA	I_V	2000	4000	-	mcd
Forward Voltage	I_F=20mA	V_F	-	2.0	2.6	V
Reverse Current	V_R=5V	I_R	-	-	100	μA
Dominant Wavelength	I_F=20mA	λ_d	-	590	-	nm
Spectral Line Half Width	I_F=20mA	$\Delta\lambda$	-	20	-	nm
Viewing Angle	I_F=20mA	$2\theta_{1/2}$	-	8	-	deg.

Typical Optical-Electrical Characteristic Curves

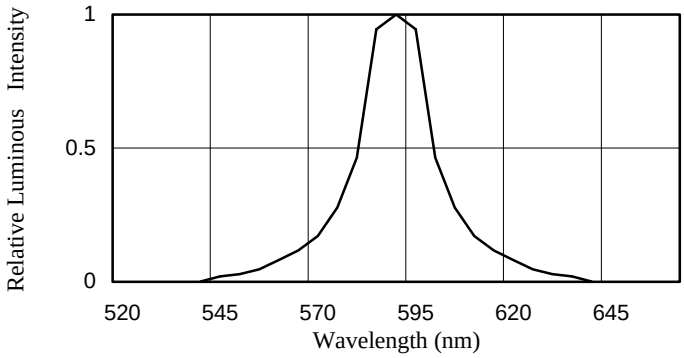

Fig.1 SPECTRAL DISTRIBUTION

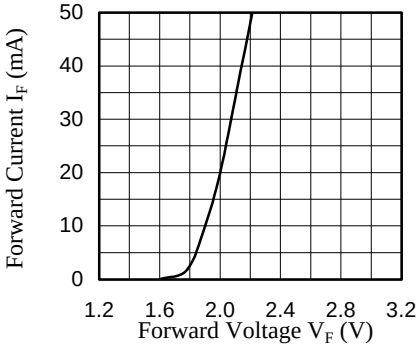

Fig.2 FORWARD CURRENT VS. FORWARD VOLTAGE

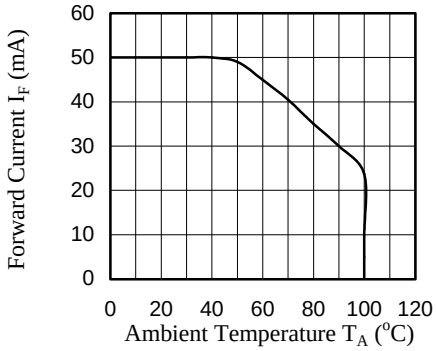

Fig.3 FORWARD CURRENT VS. AMBIENT TEMPERATURE

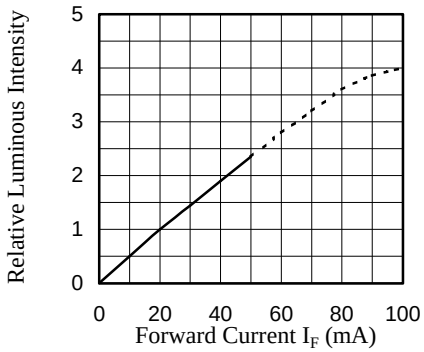

Fig.4 RELATIVE LUMINOUS INTENSITY VS. FORWARD CURRENT

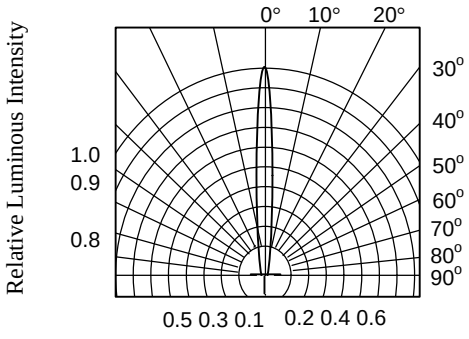

Fig.5 RADIATION DIAGRAM