Standard Products

MUX8533 Dual 16-Channel Analog Multiplexer Module Radiation Tolerant & ESD Protected

www.aeroflex.com/mux

May 17, 2011



FEATURES

- 32-channels provided by two independent 16-channel multiplexers
- Radiation performance
  - Total dose: 150 krads(Si), Dose rate = 50 - 300 rads(Si)/s
  - SEU: Immune up to 90 MeV-cm^2/mg
  - SEL: Immune by process design
- Full military temperature range
- Low power consumption < 30mW
- Separate address bus and enable line for CH0-15 and CH16-31
- Fast access time < 500ns typical
- All channel inputs protected by ±20V nominal Transorbs
- Input over voltage protection (power on or off)
- Break-Before-Make switching
- High analog input impedance (power on or off)
- Designed for aerospace and high reliability space applications
- Packaging – Hermetic ceramic
  - 56 leads, 0.80"Sq x 0.20"Ht quad flat pack
  - Typical Weight 6 grams

GENERAL DESCRIPTION

Aeroflex's MUX8533 is a radiation tolerant, Dual 16 channel multiplexer MCM (Multi Chip Module) with electrostatic discharge (ESD) protection on all channel inputs.

The MUX8533 has been specifically designed to meet exposure to radiation environments. It is available in a 56 lead High Temperature Co-Fired Ceramic (HTCC) Quad Flatpack (CQFP). It is guaranteed operational from -55°C to +125°C. Available screened in accordance with MIL-PRF-38534, the MUX8533 is ideal for demanding military and space applications.

ORGANIZATION AND APPLICATION

The MUX8533 consists of two separate and independent 16 channel multiplexers arranged as shown in the block diagram.

A Section

Sixteen (16) channels addressable by bus A_0~A_3, enabled by $\overline{EN}$0-15 and outputted on Output 1 (0-15).

B Section

Sixteen (16) channels addressable by bus B_0~B_3, enabled by $\overline{EN}$16-31 and outputted on Output 2 (16-31).

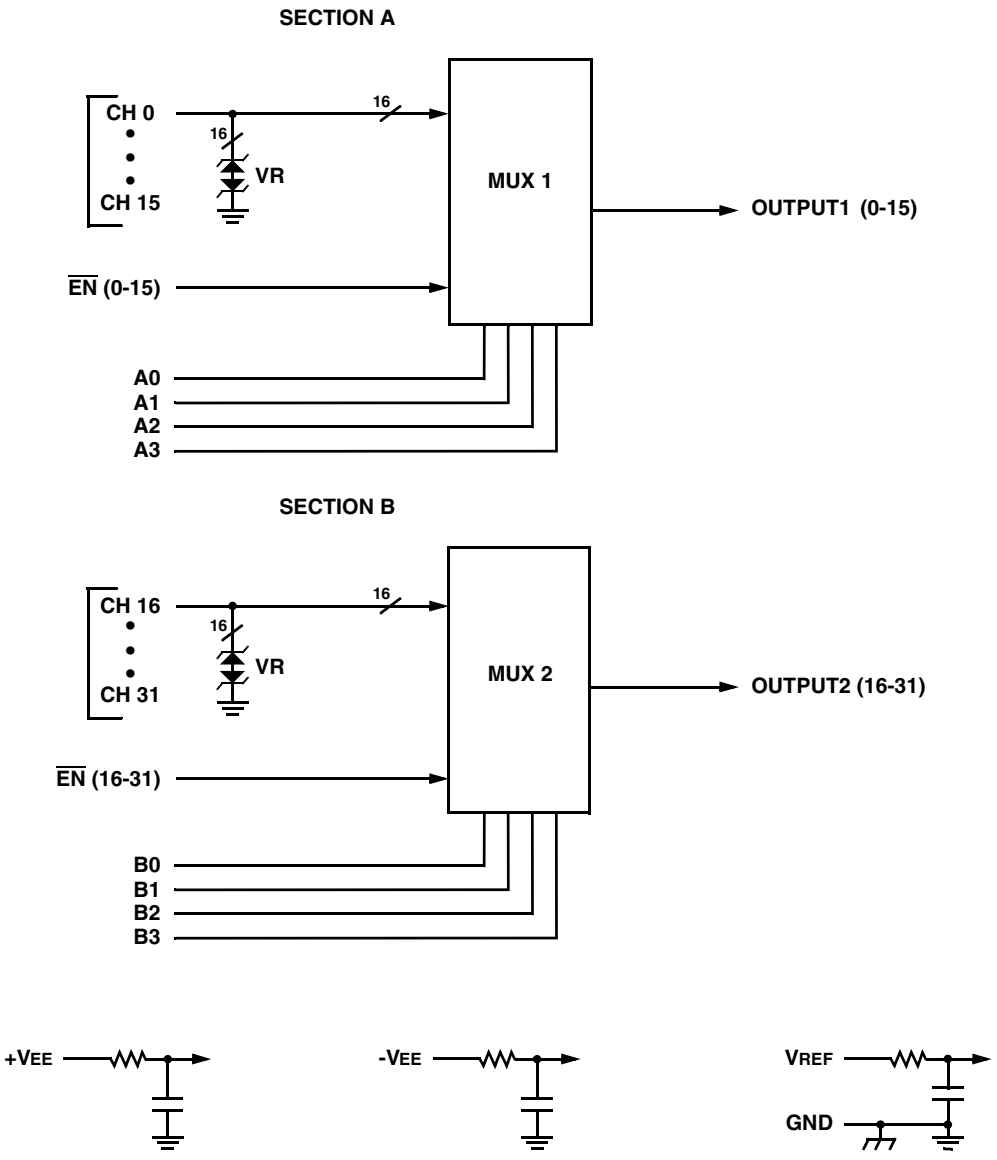

MUX8533: DUAL 16 CHANNEL ANALOG MUX BLOCK DIAGRAM

ABSOLUTE MAXIMUM RATINGS 1/

Parameter	Range	Units
Case Operating Temperature Range	-55 to +125	°C
Storage Temperature Range	-65 to +150	°C
Supply Voltage +VEE (Pin 18) -VEE (Pin 46) VREF (Pin 39)	 +20 -20 +7.5	 V V V
Digital Input Overvoltage VEN0-15 (Pin 13), VEN16-31 (Pin 44), VA (Pins 14, 15, 16, 17), VB (Pins 40, 41, 42, 43)	< VREF +.5 > GND -.5	V V
Analog Input Over Voltage VIN	±18V	V

Notes:
1/ All measurements are made with respect to ground.

NOTICE: Stresses above those listed under "Absolute Maximums Rating" may cause permanent damage to the device. These are stress rating only; functional operation beyond the "Operation Conditions" is not recommended and extended exposure beyond the "Operation Conditions" may affect device reliability.

RECOMMENDED OPERATING CONDITIONS 1/

Symbol	Parameter	Typical	Units
+VEE	+15V Power Supply Voltage	+15.0	V
-VEE	-15V Power Supply Voltage	-15.0	V
VREF	Reference Voltage	+5.00	V
VAL	Logic Low Level	+0.8	V
VAH	Logic High Level	+4.0	V

1/ Power Supply turn-on sequence shall be as follows: -VEE, VREF, followed by +VEE.

DC ELECTRICAL PERFORMANCE CHARACTERISTICS 1/

(TC = -55°C TO +125°C, -VEE = -15V, VREF = +5.0V, +VEE = +15V - UNLESS OTHERWISE SPECIFIED)

Parameter	Symbol	Conditions	Min	Max	Units
Supply Current	+IEE	VEN(0-15) = VEN(16-31) = VA(0-3) = VB(0-3) = 0	0	1	mA
	-IEE	VEN(0-15) = VEN(16-31) = VA(0-3) = VB(0-3) = 0	-1	0	mA
	+ISBY	VEN(0-15) = VEN(16-31) = 4V, VA(0-3) = VB(0-3) = 0 7/	0	1	mA
	-ISBY	VEN(0-15) = VEN(16-31) = 4V, VA(0-3) = VB(0-3) = 0 7/	-1	0	mA
Address Input Current	IAL(0-3)A	VA = 0V	-1	1	µA
	IAH(0-3)A	VA = 5V	-1	1	µA
	IAL(0-3)B	VB = 0V	-1	1	µA
	IAH(0-3)B	VB = 5V	-1	1	µA
Enable Input Current	IENL(0-15)	VEN(0-15) = 0V	-1	1	µA
	IENH(0-15)	VEN(0-15) = 5V	-1	1	µA
	IENL(16-31)	VEN(16-31) = 0V	-1	1	µA
	IENH(16-31)	VEN(16-31) = 5V	-1	1	µA

DC ELECTRICAL PERFORMANCE CHARACTERISTICS 1/ (continued)

(T_C = -55°C TO +125°C, $-V_{EE}$ = -15V, V_{REF} = +5.0V, $+V_{EE}$ = +15V - UNLESS OTHERWISE SPECIFIED)

Parameter	Symbol	Conditions		Min	Max	Units
Positive Input Leakage Current (CH0-CH31)	$+I_{SOFFOUTPUT(ALL)}$	V_{IN} = +10V, V_{EN} = 4V, output and all unused MUX inputs under test = -10V 2/, 3/		-100	+1000	nA
Negative Input Leakage Current (CH0-CH31)	$-I_{SOFFOUTPUT(ALL)}$	V_{IN} = -10V, V_{EN} = 4V, output and all unused MUX inputs under test = +10V 2/, 3/		-100	+1000	nA
Positive Output Leakage Current OUTPUTS (pins 12,45)	$+I_{DOFFOUTPUT(ALL)}$	V_{OUT} = +10V, V_{EN} = 4V, output and all unused MUX inputs under test = -10V 3/, 4/		-100	+100	nA
Negative Output Leakage Current OUTPUTS (pins 12,45)	$-I_{DOFFOUTPUT(ALL)}$	V_{OUT} = -10V, V_{EN} = 4V, output and all unused MUX inputs under test = +10V 3/, 4/		-100	+100	nA
Input Clamped Voltage (CH0-CH31)	$+V_{CLMP}$	V_{EN} = 4V, all unused MUX inputs under test are open. 3/	+25°C +125°C -55°C	18.0 18.0 17.5	23.0 23.5 22.5	V V V
Input Clamped Voltage (CH0-CH31)	$-V_{CLMP}$		+25°C +125°C -55°C	-23.0 -23.5 -22.5	-18.0 -18.0 -17.5	V V V
Switch ON Resistance OUTPUTS (pins 12,45) 6/	$R_{DS(ON)}(0\text{-}31)_A$	V_{IN} = +15V, V_{EN} = 0.8V, I_{OUT} = -1mA 2/, 3/, 5/		200	1000	Ω
	$R_{DS(ON)}(0\text{-}31)_B$	V_{IN} = +5V, V_{EN} = 0.8V, I_{OUT} = -1mA 2/, 3/, 5/		200	1500	Ω
	$R_{DS(ON)}(0\text{-}31)_C$	V_{IN} = -5V, V_{EN} = 0.8V, I_{OUT} = +1mA 2/, 3/, 5/		200	2500	Ω

Notes:

1/ Measure inputs sequentially. Ground all unused inputs of the device under test. V_A is the applied input voltage to the address lines A(0-3). V_B is the applied input voltage to the address lines B(0-3)

2/ V_{IN} is the applied input voltage to the input channels (CH0-CH31).

3/ V_{EN} is the applied input voltage to the enable line $\overline{EN}$ (0-15) and $\overline{EN}$ (16-31).

4/ V_{OUT} is the applied input voltage to the output lines OUTPUT1 (0-15), OUTPUT2 (16-31)

5/ Negative current is the current flowing out of each of the MUX pins. Positive current is the current flowing into each MUX pin.

6/ The MUX8533 cannot be operated with analog inputs from -15 to -5 volts.

7/ Not tested, guaranteed to the specified limits.

SWITCHING CHARACTERISTICS

(T_C = -55°C TO +125°C, $-V_{EE}$ = -15V, V_{REF} = +5.0V, $+V_{EE}$ = +15V -- UNLESS OTHERWISE SPECIFIED)

Parameter	Symbol	Conditions	Min	Max	Units
Switching Test MUX	t_AHL	R_L = 10KΩ, C_L = 50pF	10	1000	ns
	t_ALH		10	1000	ns
	$t_{ON}EN$	R_L = 1KΩ, C_L = 50pF	10	1000	ns
	$t_{OFF}EN$		10	1000	ns

TRUTH TABLE (CH0–CH15)

A3	A2	A1	A0	$\overline{EN}$ (0-15)	"ON" CHANNEL, 1/ (OUTPUT 1)
X	X	X	X	H	NONE
L	L	L	L	L	CH0
L	L	L	H	L	CH1
L	L	H	L	L	CH2
L	L	H	H	L	CH3
L	H	L	L	L	CH4
L	H	L	H	L	CH5
L	H	H	L	L	CH6
L	H	H	H	L	CH7
H	L	L	L	L	CH8
H	L	L	H	L	CH9
H	L	H	L	L	CH10
H	L	H	H	L	CH11
H	H	L	L	L	CH12
H	H	L	H	L	CH13
H	H	H	L	L	CH14
H	H	H	H	L	CH15

1/ Between (CH0-CH15) and OUTPUT1 (0-15)

TRUTH TABLE (CH16–CH31)

B3	B2	B1	B0	$\overline{EN}$ (16-31)	"ON" CHANNEL, 1/ (OUTPUT 2)
X	X	X	X	H	NONE
L	L	L	L	L	CH16
L	L	L	H	L	CH17
L	L	H	L	L	CH18
L	L	H	H	L	CH19
L	H	L	L	L	CH20
L	H	L	H	L	CH21
L	H	H	L	L	CH22
L	H	H	H	L	CH23
H	L	L	L	L	CH24
H	L	L	H	L	CH25
H	L	H	L	L	CH26
H	L	H	H	L	CH27
H	H	L	L	L	CH28
H	H	L	H	L	CH29
H	H	H	L	L	CH30
H	H	H	H	L	CH31

1/ Between (CH16-CH31) and OUTPUT2 (16-31)

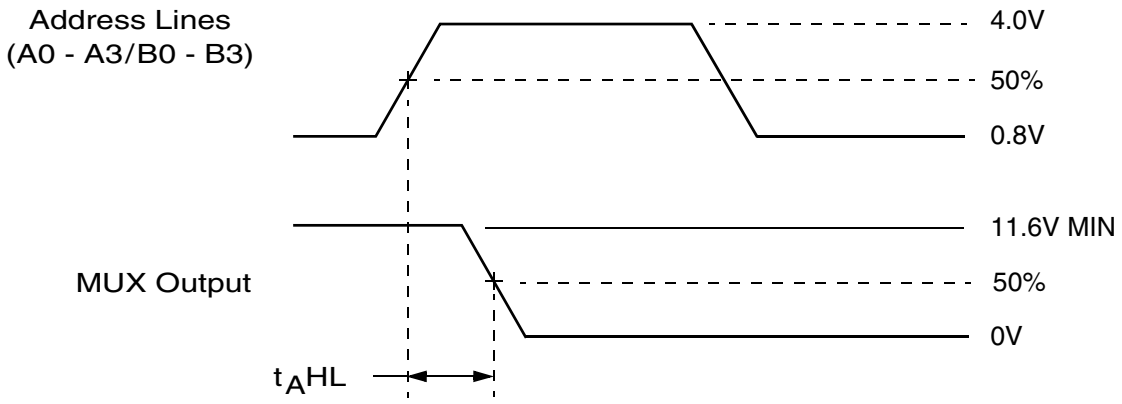

Definition of t_AHL

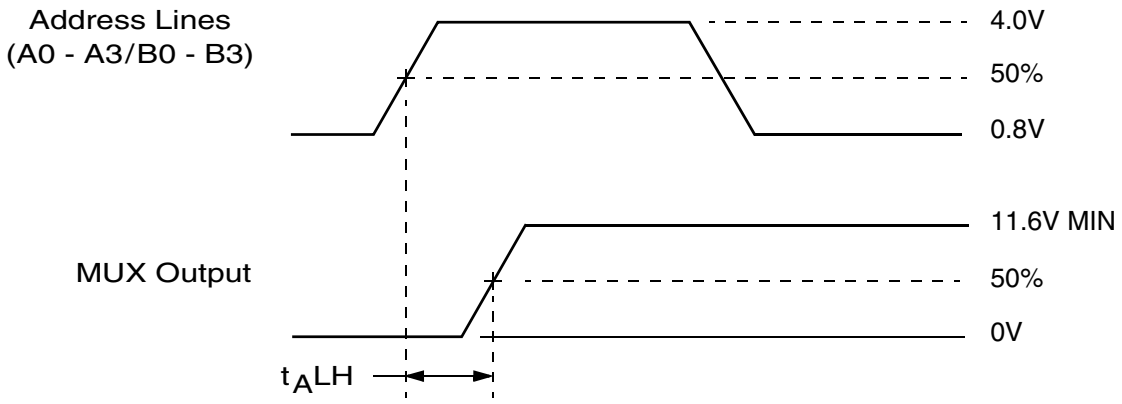

Definition of t_ALH

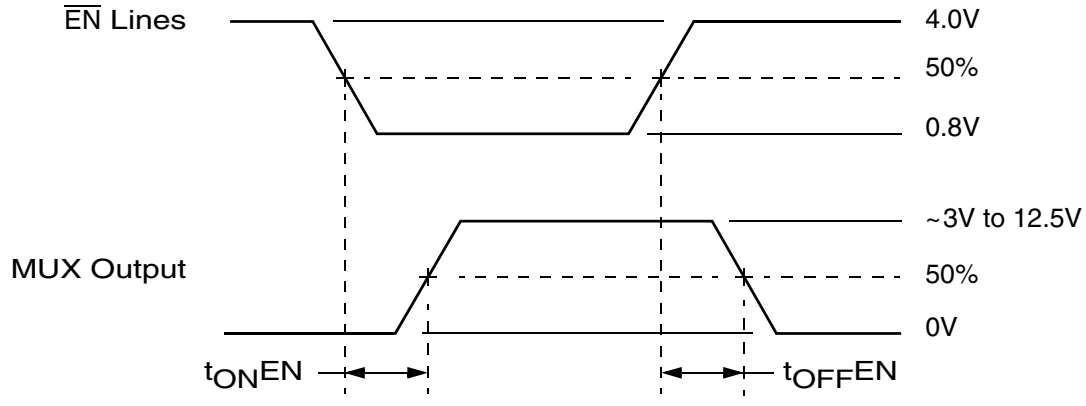

Definition of $t_{ON}EN$ and $t_{OFF}EN$

NOTE: f = 10KHz, Duty cycle = 50%.

MUX8533 SWITCHING DIAGRAMS

PIN NUMBERS & FUNCTIONS

MUX8533 – 56 Leads Ceramic QUAD Flat Pack			
Pin #	**Function**	**Pin #**	**Function**
1	CH0	29	CH31
2	CH1	30	CH30
3	CH2	31	CH29
4	CH3	32	CH28
5	CH4	33	CH27
6	CH5	34	CH26
7	GND	35	GND
8	GND	36	GND
9	CH6	37	CH25
10	CH7	38	CH24
11	CASE GND	39	V_{REF}
12	OUTPUT1 (0-15)	40	B3
13	$\overline{EN}$ (0-15)	41	B2
14	A0	42	B1
15	A1	43	B0
16	A2	44	$\overline{EN}$ (16-31)
17	A3	45	OUTPUT2 (16-31)
18	$+V_{EE}$	46	$-V_{EE}$
19	CH15	47	CH16
20	CH14	48	CH17
21	GND	49	GND
22	GND	50	GND
23	CH13	51	CH18
24	CH12	52	CH19
25	CH11	53	CH20
26	CH10	54	CH21
27	CH9	55	CH22
28	CH8	56	CH23

Notes:

1. It is recommended that all "NC" or "no connect pin", be grounded. This eliminates or minimizes any ESD or static buildup.
2. Package lid is internally connected to circuit ground (Pins 7, 8, 11, 21, 22, 35, 36, 49, 50).

ORDERING INFORMATION

Model	DSCC SMD #	Screening	Package
MUX8533-7	-	Commercial Flow, +25°C testing only	QUAD Flat Pack
MUX8533-S	-	Military Temperature, -55°C to +125°C Screened in accordance with the individual Test Methods of MIL-STD-883 for Space Applications	
MUX8533-201-1S	5962-0923202KXC	In accordance with DSCC SMD	

PACKAGE OUTLINE

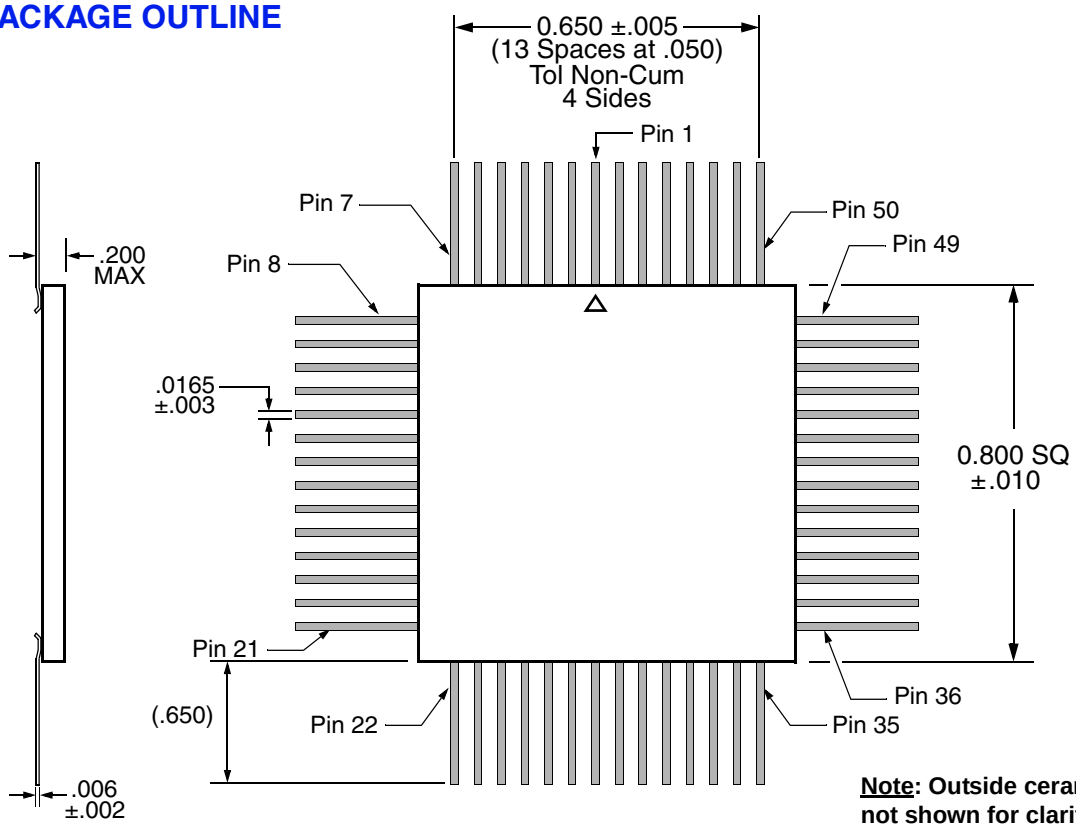

Note: Outside ceramic tie bars not shown for clarity. Contact factory for details.

EXPORT CONTROL:

This product is controlled for export under the International Traffic in Arms Regulations (ITAR). A license from the U.S. Department of State is required prior to the export of this product from the United States.

EXPORT WARNING:

Aeroflex's military and space products are controlled for export under the International Traffic in Arms Regulations (ITAR) and may not be sold or proposed or offered for sale to certain countries. (See ITAR 126.1 for complete information.)

PLAINVIEW, NEW YORK
Toll Free: 800-THE-1553
Fax: 516-694-6715

INTERNATIONAL
Tel: 805-778-9229
Fax: 805-778-1980

NORTHEAST
Tel: 603-888-3975
Fax: 603-888-4585

SE AND MID-ATLANTIC
Tel: 321-951-4164
Fax: 321-951-4254

WEST COAST
Tel: 949-362-2260
Fax: 949-362-2266

CENTRAL
Tel: 719-594-8017
Fax: 719-594-8468

www.aeroflex.com info-ams@aeroflex.com

AEROFLEX
A passion for performance.

Aeroflex Microelectronic Solutions reserves the right to change at any time without notice the specifications, design, function, or form of its products described herein. All parameters must be validated for each customer's application by engineering. No liability is assumed as a result of use of this product. No patent licenses are implied.

Our passion for performance is defined by three attributes represented by these three icons: solution-minded, performance-driven and customer-focused