Frontier Electronics Corp.

667 E. COCHRAN STREET, SIMI VALLEY, CA 93065
TEL: (805) 522-9998 FAX: (805) 522-9989
E-mail: frontiersales@frontierusa.com
Web: http://www.frontierusa.com

3A ULTRA FAST RECOVERY SURFACE MOUNT RECTIFIER

MURS305 THRU MURS360

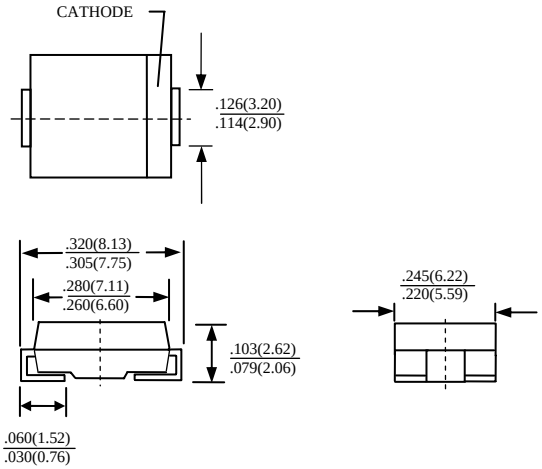

FEATURES

- LOW PROFILE PACKAGE
- PLASTIC PACKAGE HAS UNDERWRITERS LABORATORY 94V-0
- IDEAL FOR SURFACE MOUNTED APPLICATION
- GLASS PASSIVATED CHIP JUNCTION
- BUILT-IN STRAIN RELIEF DESIGN
- ULTRA FAST RECOVERY TIME FOR HIGH EFFICIENT
- HIGH TEMPERATURE SOLDERING : 250°C /10 SECONDS AT TERMINALS

MECHANICAL DATA

- CASE: JEDEC DO-214AA MOLDED PLASTIC BODY, DIMENSIONS IN INCHES AND (MILLIMETERS
- TERMINAL: SOLDER PLATED, SOLDERABLE PER MIL-STD-750 METHOD 2026
- POLARITY: COLOR BAND DENOTES CATHODE
- WEIGHT: 0.21 GRAMS

MAXIMUM RATINGS AND ELECTRICAL CHARACTERISTICS RATINGS AT 25°C AMBIENT TEMPERATURE UNLESS OTHERWISE SPECIFIED SINGLE PHASE, HALF WAVE, 60 HZ, RESISTIVE OR INDUCTIVE LOAD .FOR CAPACITIVE LOAD, DERATE CURRENT BY 20%

RATINGS	SYMBOL	MURS 305	MURS 310	MURS 315	MURS 320	MURS 340	MURS 360	UNITS
MAXIMUM RECURRENT PEAK REVERSE VOLTAGE	V_{RRM}	50	100	150	200	400	600	V
MAXIMUM RMS VOLTAGE	V_{RMS}	35	70	105	140	280	420	V
MAXIMUM DC BLOCKING VOLTAGE	V_{DC}	50	100	150	200	400	600	V
MAXIMUM AVERAGE FORWARD RECTIFIED CURRENT AT T_L=75°C	I_O	3.0						A
PEAK FORWARD SURGE CURRENT, 8.3ms SINGLE HALF SINE-WAVE SUPERIMPOSED ON RATED LOAD	I_{FSM}	75						A
TYPICAL JUNCTION CAPACITANCE (NOTE 1)	C_J	70						PF
TYPICAL THERMAL RESISTANCE (NOTE 2)	$R_{\theta jL}$	13						°C /W
STORAGE TEMPERATURE RANGE	T_{STG}	-55 TO + 150						°C
OPERATING TEMPERATURE RANGE	T_{OP}	-55 TO + 125						°C

ELECTRICAL CHARACTERISTICS (A_T T_A =25°C UNLESS OTHERWISE NOTED)

CHARACTERISTICS	SYMBOL	MURS 305	MURS 310	MURS 315	MURS 320	MURS 340	MURS 360	UNITS
MAXIMUM FORWARD VOLTAGE AT I_O DC	V_F	0.875				1.25		V
MAXIMUM DC REVERSE CURRENT AT TA=25°C	I_R	2				5		µA
MAXIMUM DC REVERSE CURRENT AT TA=125°C	I_R	250						µA
MAXIMUM REVERSE RECOVERY TIME (NOTE 3)	T_{RR}	25				50		nS
MARKING		U3A	U3B	U3C	U3D	U3G	U3J	

NOTES: 1. MEASURED AT 1 MHZ AND APPLIED REVERSE VOLTAGE 0F 4.0 VOLTS
2. THERMAL RESISTANCE FROM JUNCTION TO AMBIENT AND JUNCTION TO LEAD P.C.B. MOUNTED ON 0.3x0.3”(8.0x8.0 mm) COPPER PAD AREAS
3. REVERSE RECOVERY TEST CONDITIONS: I_F=0.5A, I_R=1.0A, I_{RR}=0.25A

RATINGS AND CHARACTERISTIC CURVE MURS305 THRU MURS360

FIG. 1-TEST CIRCUIT DIAGRAM AND REVERSE RECOVERY TIME CHARACTERISTIC

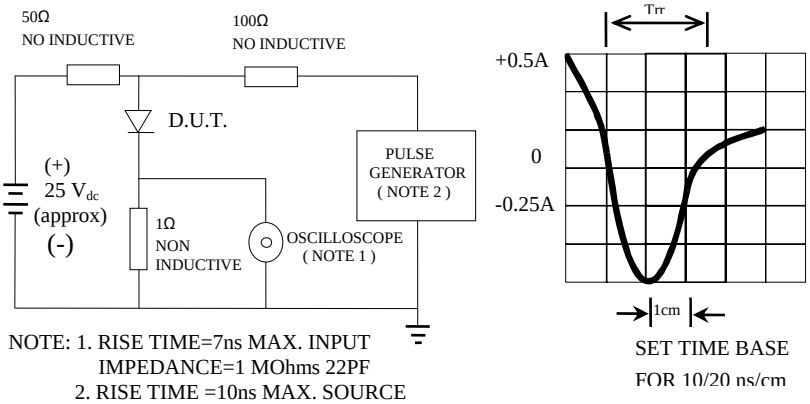

NOTE: 1. RISE TIME=7ns MAX. INPUT IMPEDANCE=1 MOhms 22PF
2. RISE TIME =10ns MAX. SOURCE IMPEDANCE=50 OHMS

SET TIME BASE FOR 10/20 ns/cm

FIG. 2-TYPICAL FORWARD CURRENT DERATING CURVE

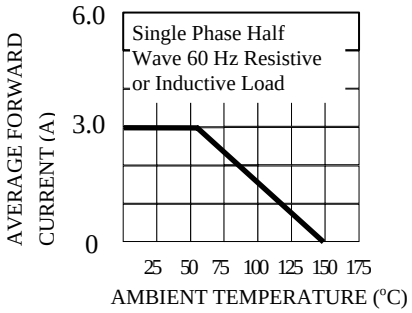

FIG. 3-TYPICAL REVERSE CHARACTERISTICS

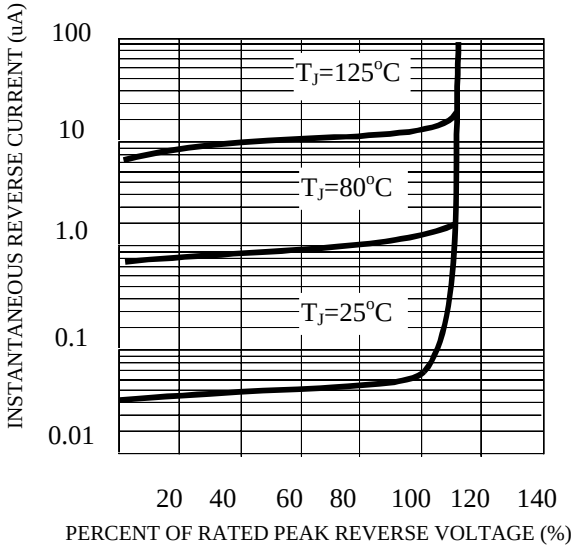

FIG. 4-TYPICAL INSTANTANEOUS FORWARD CHARACTERISTICS

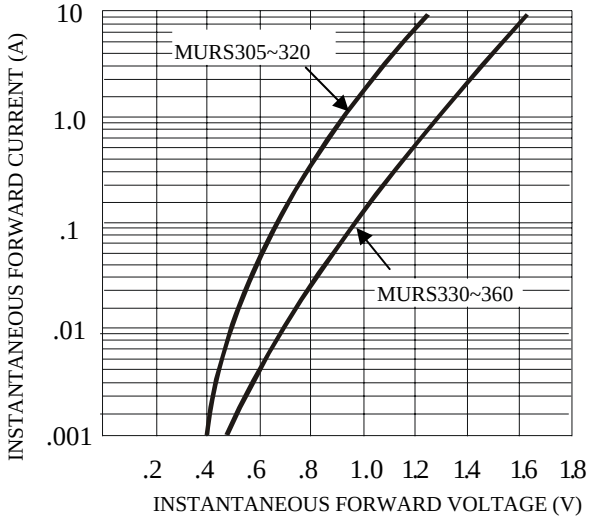

FIG. 5-MAXIMUM NON-REPETITIVE FORWARD SURGE CURRENT

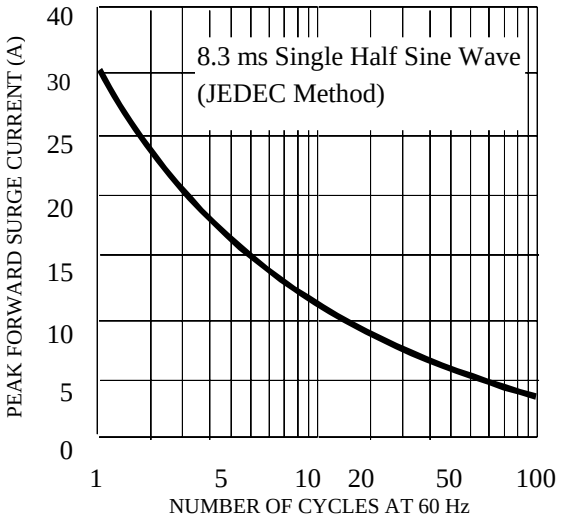

FIG. 6-TYPICAL JUNCTION CAPACITANCE

