MURF3020CT ULTRAFAST PLASTIC RECTIFIER

Applications:

- **Switching Power Supply**
- **Power Switching Circuits**
- **General Purpose**

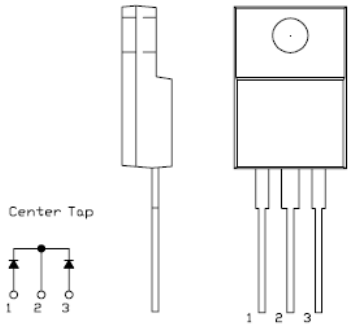

OUTLINE DRAWING

Features:

- **Ultra-Fast Switching**
- **High Current Capability**
- **Low Reverse Leakage Current**
- **High Surge Current Capability**
- **Plastic Material has UL Flammability Classification 94V-O**
- **This is a Pb − Free Device**
- **All SMC parts are traceable to the wafer lot**
- **Additional testing can be offered upon request**

Mechanical Dimensions: In mm

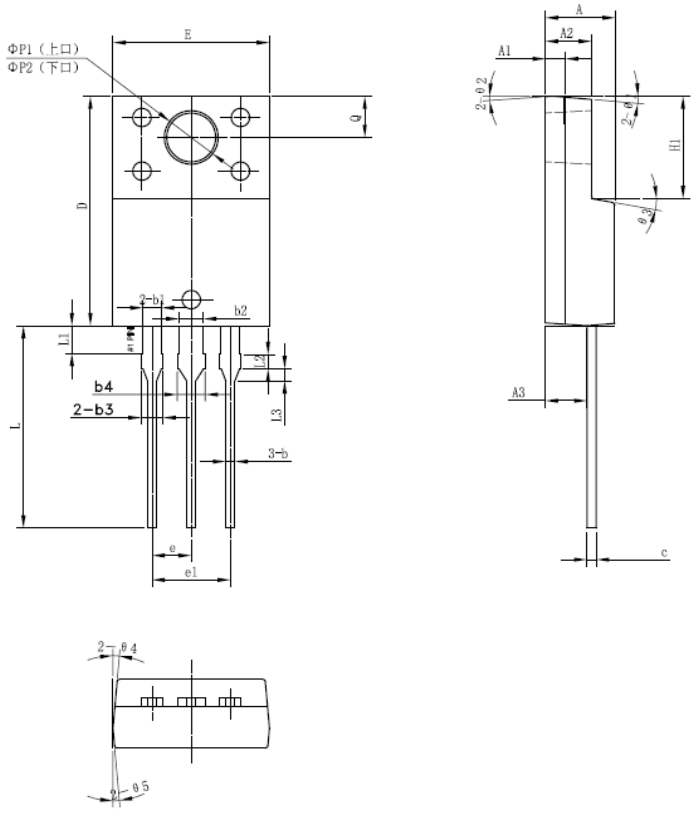

SYMBOL	MIN.	TYP.	MAX.
A	4.30	4.50	4.70
A1	1.10	1.30	1.50
A2	2.80	3.00	3.20
A3	2.50	2.70	2.90
b	0.50	0.60	0.75
b1	1.10	1.20	1.35
b2	1.50	1.60	1.75
b3	1.20	1.30	1.45
b4	1.60	1.70	1.85
c	0.55	0.60	0.75
D	14.80	15.00	15.20
E	9.96	10.16	10.36
e		2.55	
e1		5.10	
H1	6.50	6.70	6.90
L	12.70	13.20	13.70
L1	1.60	1.80	2.00
L2	0.80	1.00	1.20
L3	0.60	0.80	1.00
ΦP1(上口)	3.30	3.50	3.70
ΦP2(下口)	2.99	3.19	3.39
Q	2.50	2.70	2.90
Θ1		5°	
Θ2		4°	
Θ3		10°	
Θ4		5°	
Θ5		5°	

ITO-220AB

Technical Data
Data Sheet N0360, Rev. -

Green Products

Marking Diagram:

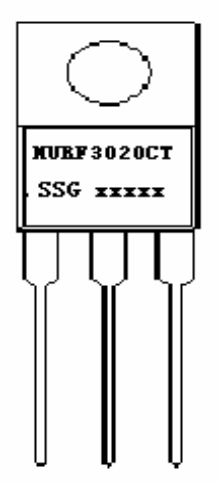

Where XXXXX is YYWWL

MUR	= Device Type
F	= Package type
30	= Forward Current (30A)
20	= Reverse Voltage (200V)
CT	= Configuration
SSG	= SSG
YY	= Year
WW	= Week
L	= Lot Number

Cautions: Molding resin
Epoxy resin UL:94V-0

Ordering Information:

Device	Package	Shipping
MURF3020CT	ITO-220AB (Pb-Free)	50pcs / tube

For information on tape and reel specifications, including part orientation and tape sizes, please refer to our Tape and Reel Packaging Specification.

Maximum Ratings:

Characteristics	Symbol	Condition	Max.	Units
Peak Inverse Voltage	V_{RWM}	-	200	V
Max. Average Forward	$I_{F\ (AV)}$	50% duty cycle @Tc=125°C, rectangular wave form	30	A
Max. Peak One Cycle Non-Repetitive Surge Current (Per leg)	I_{FSM}	8.3ms, Half Sine pulse	110	A

Electrical Characteristics:

Characteristics	Symbol	Condition	Max.	Units
Max. Forward Voltage Drop* (Per leg)	V_{F1}	@15A, Pulse, T_J = 25°C	1.7	V
Max. Reverse Current* (Per leg)	I_{R1}	@V_R = rated V_R T_J = 25°C	0.05	mA
	I_{R2}	@V_R = rated V_R T_J = 125°C	3.5	mA
Max. Reverse Recovery Time	t_{rr}	I_F=500mA, I_R=1A,and I_{rm}=250mA	50	ns
RSM Isolation Voltage (t=1.0 second,R.H.< =30%, T_A =25°C)	V_{1so}	Clip mouting, the epoxy body away from the heatsink edge by more than 0.110"along the lead direction.	4500	V
		Clip mouting, the epoxy body is inside the heatsink	3500	
		Screw mounting, the epoxy body is inside the heatsink.	1500	

* Pulse width < 300 μs, duty cycle < 2%

Thermal-Mechanical Specifications:

Characteristics	Symbol	Condition	Specification	Units
Max. Junction Temperature	T_J	-	-55 to +150	°C
Max. Storage Temperature	T_{stg}	-	-55 to +150	°C
Maximum Thermal Resistance Junction to Case	$R_{\theta JC}$	DC operation	2.0	°C/W
Approximate Weight	wt	-	2	g
Case Style	ITO-220AB			

Technical Data
Data Sheet N0360, Rev. -

Green Products

DISCLAIMER:
1- The information given herein, including the specifications and dimensions, is subject to change without prior notice to improve product characteristics. Before ordering, purchasers are advised to contact the SMC - Sangdest Microelectronics (Nanjing) Co., Ltd sales department for the latest version of the datasheet(s).
2- In cases where extremely high reliability is required (such as use in nuclear power control, aerospace and aviation, traffic equipment, medical equipment , and safety equipment) , safety should be ensured by using semiconductor devices that feature assured safety or by means of users' fail-safe precautions or other arrangement .
3- In no event shall SMC - Sangdest Microelectronics (Nanjing) Co., Ltd be liable for any damages that may result from an accident or any other cause during operation of the user's units according to the datasheet(s). SMC - Sangdest Microelectronics (Nanjing) Co., Ltd assumes no responsibility for any intellectual property claims or any other problems that may result from applications of information, products or circuits described in the datasheets.
4- In no event shall SMC - Sangdest Microelectronics (Nanjing) Co., Ltd be liable for any failure in a semiconductor device or any secondary damage resulting from use at a value exceeding the absolute maximum rating.
5- No license is granted by the datasheet(s) under any patents or other rights of any third party or SMC - Sangdest Microelectronics (Nanjing) Co., Ltd.
6- The datasheet(s) may not be reproduced or duplicated, in any form, in whole or part, without the expressed written permission of SMC - Sangdest Microelectronics (Nanjing) Co., Ltd.
7- The products (technologies) described in the datasheet(s) are not to be provided to any party whose purpose in their application will hinder maintenance of international peace and safety nor are they to be applied to that purpose by their direct purchasers or any third party. When exporting these products (technologies), the necessary procedures are to be taken in accordance with related laws and regulations..