ULTRAFST RECOVERY RECTIFIERS

Reverse Voltage - 400 V

Forward Current - 50 A

lead-free ROHS

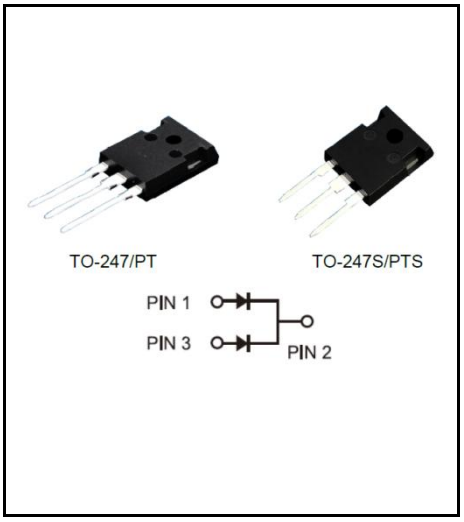

FEATURES

- High speed switching capability
- High current capability
- High forward surge capability
- Low power losses，High efficiency
- For use in low voltage, high frequency inverters
- Lead free in comply with EU RoHS 2011/65/EU directives

MECHANICAL DATA

- Case: TO-247/PT TO-247/PTS
- Solder bath temperature275℃maximum,10s per JESD22-106

Primary Characteristic

I_o	2*25A
V_{RRM}	400V
I_{FSM}	420A
V_F	1.00V
T_J Max	150°C

Maximum Ratings (Per Leg) at Ta=25°C unless otherwise specified

Parameter		Symbols	Value	Units
Maximum Repetitive Peak Reverse Voltage		V_{RRM}	400	V
Maximum RMS voltage		V_{RMS}	400	V
Maximum DC Blocking Voltage		V_{DC}	400	V
Maximum Average Forward Rectified Current	Per Leg	I_o	25	A
	Total		50	
Peak Forward Surge Current, 8.3ms Single Half Sine-wave		I_{FSM}	420	A
Operating Temperature Range		T_J	150	°C
Storage Temperature Range		T_{STG}	-40 ~ +150	°C
Typical Thermal Resistance (Note1) TO-247/PT TO-247/PTS		$R_{\theta JA}$/ $R_{\theta JC}$	2	°C/W

Note1: Thermal resistance from Junction to case per leg mounted on heatsink.

Electrical Characteristics (Per Leg) unless otherwise specified

Characteristics		Symbols	Value		Units
Forward Voltage Drop(Note2)		V_F	Typ	Max	V
at IF=5A	TA=25°C		0.88	-	
	TA=125°C		0.70	-	
at IF=10A	TA=25°C		1.00	-	
	TA=125°C		0.81	-	
at IF=25A	TA=25°C		1.20	1.39	
	TA=125°C		1.00	-	
Maximum Reverse Current at V_R=400V	TA=25°C	I_R	0.1	1	uA
	TA=25°C		10	-	uA
Maximum Reverse Recovery Time at IF=0.5A, IR=1A, IRR=0.25A		T_{RR}	-	35	nS

Note2:Pulse test: 300 μs pulse width, 1 % duty cycle

Download from alldatasheet.com

RATINGS AND CHARACTERISTIC CURVES

FIG.1 MAXIMUM FORWARD CURRENT DERATING CURVE

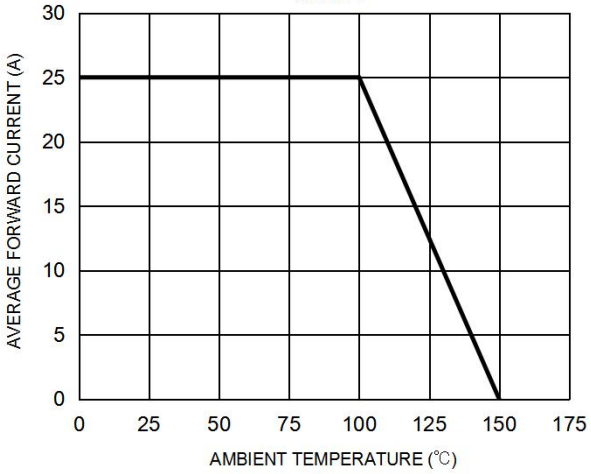

FIG. 2 MAXIMUM NON-REPETITIVE FORWARD SURGE CURRENT PER LEG

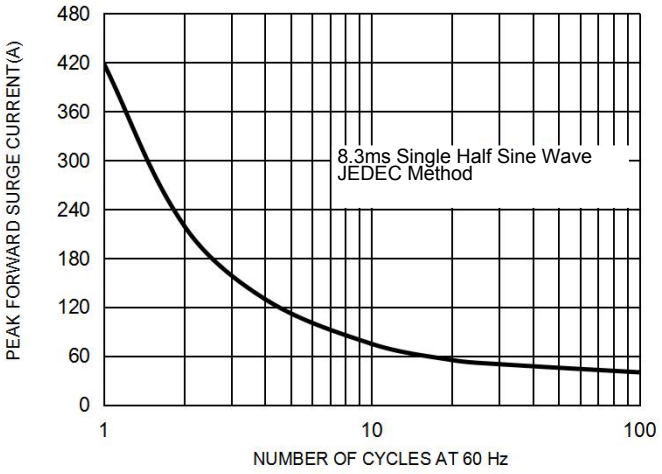

FIG. 3 TYPICAL FORWARD CHARACTERISTICS PER LEG

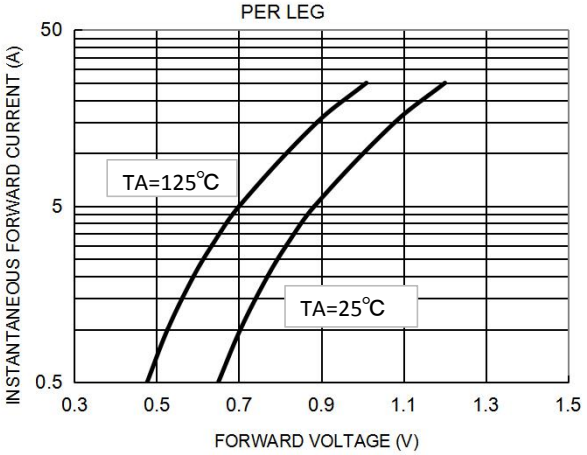

FIG. 4 TYPICAL REVERSE CHARACTERISTICS PER LEG

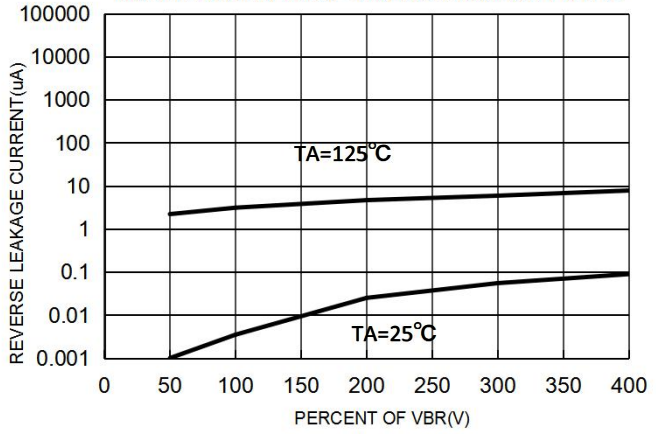

Marking on the body

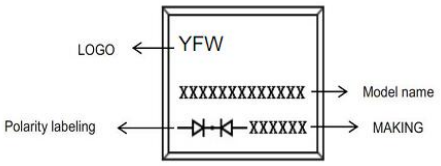

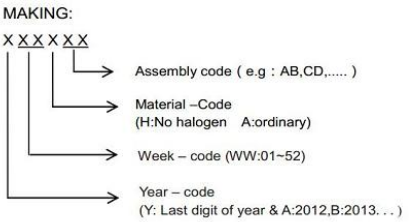

Ordering information

Part Number	Package	Unit Weight	Base Quantity	Delivery mode
MUR5040PT	TO-247	0.209oz(5.93g)	30 pcs / tube	600pcs/box 2400pcs/carton
MUR5040PTS	TO-247S	0.158oz(4.48g)	30 pcs / tube	600pcs/box 2400pcs/carton

Note: For Halogen Free molding compound, add "H" suffix to part number above.

Download from alldatasheet.com

Package Outline Dimensions millimeters

TO-247

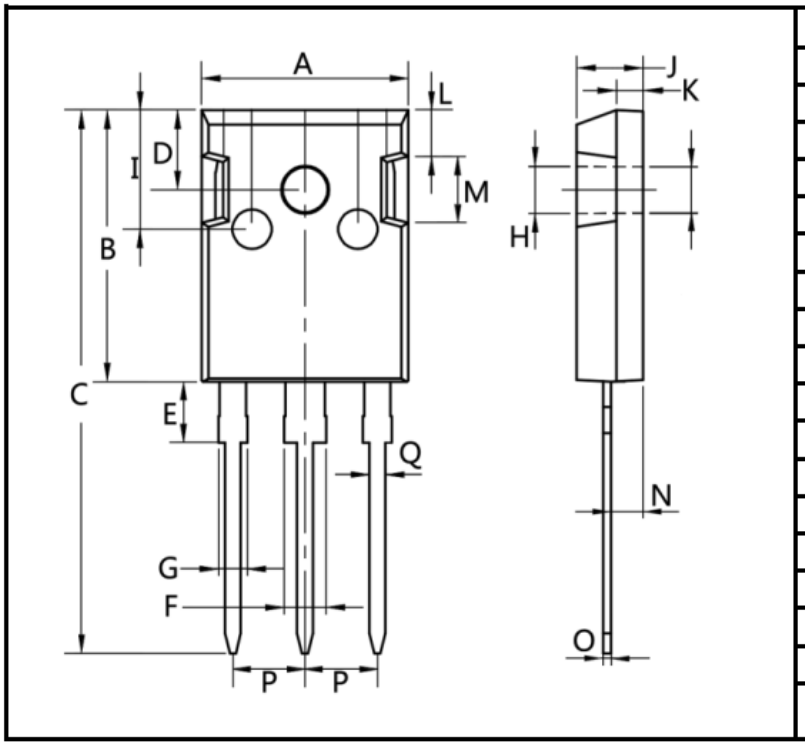

Dim.	Min.	Max.
A	15.0	16. 0
B	20.0	21.0
C	41.0	42.0
D	5.0	6.0
E	4.0	5.0
F	2.5	3.5
G	1.75	2.5
H	3.0	3.5
I	8.0	10.0
J	4.9	5.1
K	1.9	2.1
L	3.5	4.0
M	4.75	5.25
N	2.0	3.0
O	0.55	0.75
P	Typ 5.08	
Q	1.2	1.3
All Dimensions in millimeter		

TO-247S

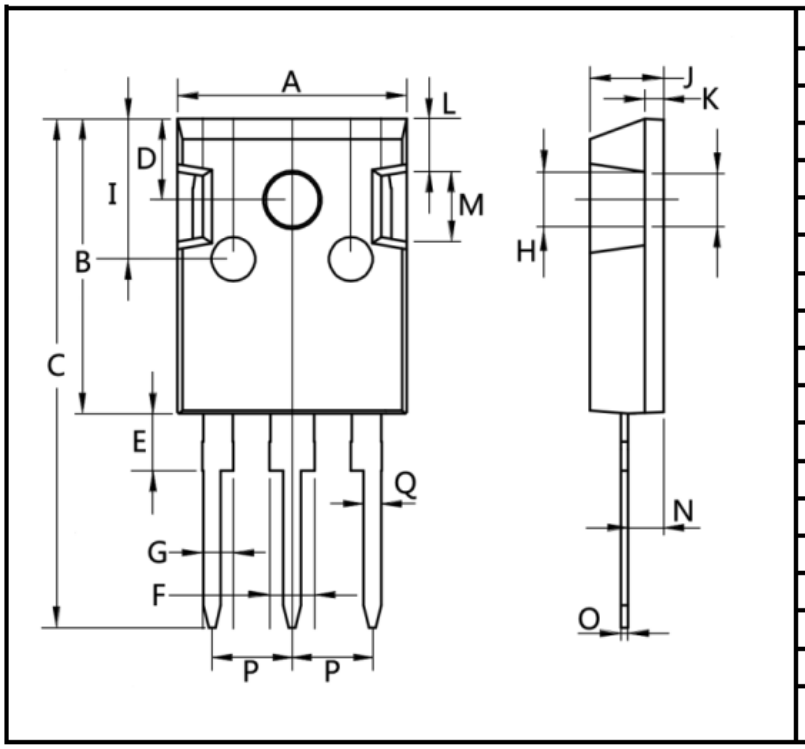

Dim.	Min.	Max.
A	15.0	16.0
B	19.5	20.5
C	33.5	35.5
D	5.0	6.0
E	3.5	4.5
F	2.5	3.5
G	1.75	2.5
H	3.0	4.0
I	9.0	11.0
J	4.9	5.1
K	1.0	1.3
L	3.75	4.25
M	4.75	5.25
N	1.8	2.2
O	0.45	0.6
P	Typ 5.08	
Q	1.2	1.3
All Dimensions in millimeter		

Download from alldatasheet.com