Rev	AWO #	Description	Date	Appr
-		RELEASED	12/01/11	

APPROVED: _____

DATE: _____ TITLE: _____

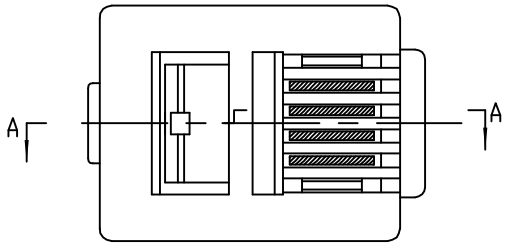

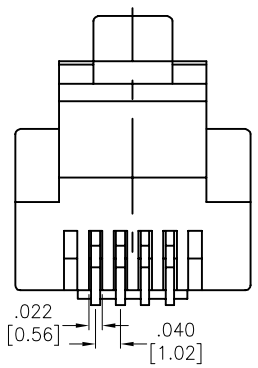

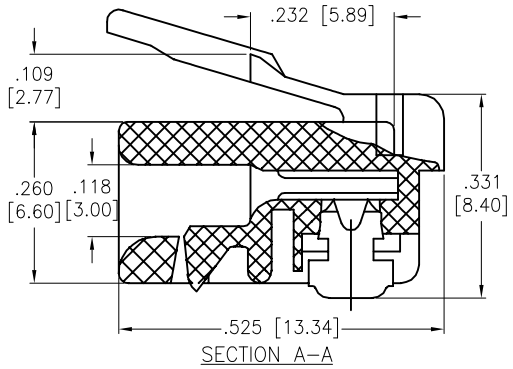

SECTION A–A

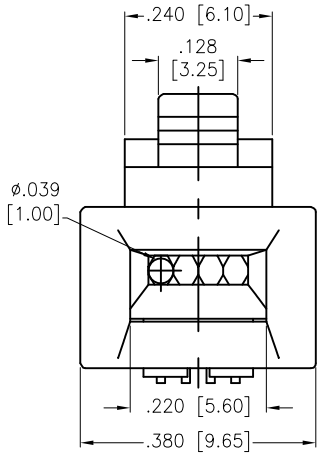

SPECIFICATIONS:
Material:
Insulator: Polycarbonate, rated UL 94V–0
Insulator color: Clear
Contacts: Phosphor Bronze
Plating:
Gold over Nickel underplate on contact area
Electrical:
Insulation resistance: 1,000 Mohms min
Dielectric withstanding voltage: 1.000 VAC for 1 minute
Environmental:
Lead free, RoHS compliant

RoHS COMPLIANT

UNLESS OTHERWISE SPECIFIED
ALL DIMENSIONS ARE INCHES [MM]
TOLERANCES: EXCEPT AS NOTED

INCHES		HOLES	
.X	± .10	Ø.X	±.10
.XX	± .020	Ø.XX	±.015
.XXX	± .015	Ø.XXX	±.010

APPROVALS		DATE
DRAWN	TW	12/01/11
CHECKED	AY	12/01/11
APPROVED		

ADAM TECH
909 Rahway Avenue, Union, NJ 07083
Phone: 908-687-5000 Fax: 908-687-5710

TITLE: MODULAR TELEPHONE PLUG, 6P4C
STANDARD OVAL WIRE TYPE

SIZE	PART NO.	REV.
X	MTP-64	-

REF: S00005C | SCALE: NTS | SHEET 1 OF 1