0.75" Light Bar

FEATURES

- **0.75" light bar**
- **Suitable for backlighting**
- **Uniform light emission**

OPTO-ELECTRICAL CHARACTERISTICS (Ta = 25°C)

PART NO.	PEAK WAVE LENGTH (nm)	EMITTED COLOR	MAXIMUM RATINGS					OPTO ELECTRICAL CHARACTERISTICS						
			IF(mA)	VR(V)	PD (mW)	T_{opr}(°C)	T_{stg}(°C)	VF(V)			IR(μA)		IV(mcd)	
								typ.	max.	@mA	max.	@VR	typ.per die	@mA
MTLB2175-G	567	Green	30	5	85	-25~+85	-25~+100	2.1	3.0	20	100	5	5.7	10
MTLB3175-Y	585	Yellow	30	5	85	-25~+85	-25~+100	2.1	3.0	20	100	5	4.6	10
MTLB4175-O	635	Orange	30	5	85	-25~+85	-25~+100	2.1	3.0	20	100	5	6.5	10
MTLB4175-HR	635	Hi-Eff Red	30	5	85	-25~+85	-25~+100	2.1	3.0	20	100	5	6.5	10
MTLB7175-UR	660	Ultra Red	30	4	70	-25~+85	-25~+100	1.9	2.5	20	100	4	25.4	20

PACKAGE DIMENSIONS AND PIN FUNCTIONS

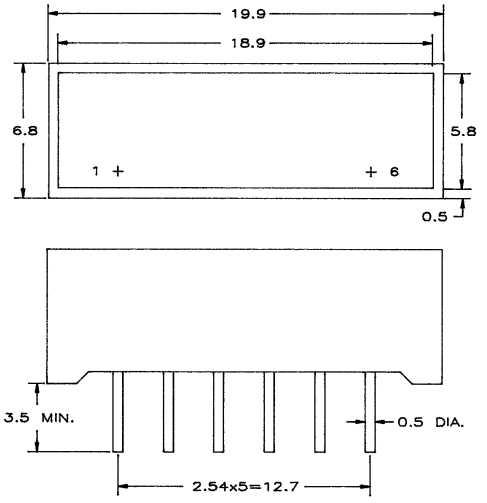

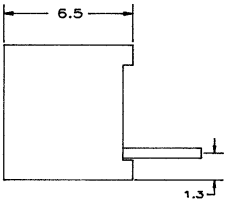

PIN NO. FUNCTION
1. ANODE
2. CATHODE
3. ANODE
4. CATHODE
5. ANODE
6. CATHODE

1. ALL DIMENSIONS ARE IN mm, TOLERANCE IS ±0.25mm UNLESS OTHERWISE SPECIFIED.
2. THE SLOPE ANGLE OF ANY PIN MAY BE ±5.0° MAX.

marktech optoelectronics

120 Broadway • Menands, New York 12204

Toll Free: **(800) 98-4LEDS** • Fax: (518) 432-7454