## Plug-in Signal Conditioners M-UNIT

## 2-WIRE STRAIN GAUGE TRANSMITTER

Functions & Features

• Used in conjunction with bridge type strain gauges utilized in load cells, pressure transducers, etc.
• Excitation in pulses enables use with strain gauges of the bridge resistance 350 Ω
• Non-isolated
• Zero adjustment range: 0 to 80 %, span adjustment range 100 to 20 %
• High-density mounting

Typical Applications

• Weighing system for tanks, hoppers, silos
• Weighing system using cranes
• Float level meter utilizing strain gauges

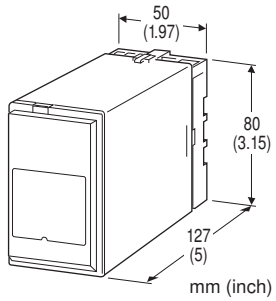


## MODEL: MTL–[1][2]

## ORDERING INFORMATION

• Code number: MTL-[1][2]
Specify a code from below for each of [1] and [2].
(e.g. MTL-2/Q)
• Specify the specification for option code /Q
(e.g. /C01/S01)

## [1] INPUT STRAIN GAUGE

**2**: 2 mV/V
**0**: Specify

## [2] OPTIONS

**blank**: none
**/Q**: With options (specify the specification)

### SPECIFICATIONS OF OPTION: Q (multiple selections)

**COATING (For the detail, refer to M-System's web site.)**
**/C01**: Silicone coating
**/C02**: Polyurethane coating
**/C03**: Rubber coating
**TERMINAL SCREW MATERIAL**
**/S01**: Stainless steel

## GENERAL SPECIFICATIONS

**Construction**: Plug-in
**Connection**: M3.5 screw terminals
**Screw terminal**: Chromated steel (standard) or stainless steel
**Housing material**: Flame-resistant resin (black)
**Zero adjustments (tare)**: 0 – 80 % (front)
**Span adjustment (sensitivity)**: 100 - 20% (front)

## INPUT SPECIFICATIONS

**Input**: Bridge voltage from load cells
**Rated output from strain gauge**: 2 mV/V
**Nominal bridge resistance**: 350 Ω minimum
**Excitation**: 5 V voltage pulse

## OUTPUT SPECIFICATIONS

**Output**: 4 – 20 mA DC
**Load resistance vs. supply voltage**: Load Resistance (Ω) = (Supply Voltage (V) – 13 (V)) ÷ 0.02 (A)
(including leadwire resistance)

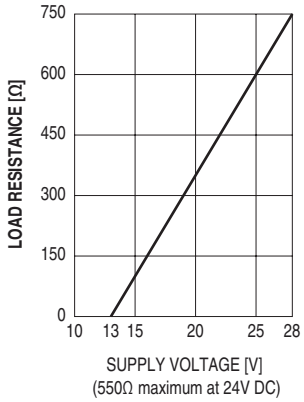


## INSTALLATION

**Supply voltage**: 13 – 28 V DC
**Operating temperature**: -5 to +60°C (23 to 140°F)
**Operating humidity**: 30 to 90 %RH (non-condensing)
**Mounting**: Surface or DIN rail
**Weight**: 200 g (0.44 lb)

## PERFORMANCE in percentage of span

**Accuracy**: ±0.2 %
**Temp. coefficient**: ±0.02 %/°C (±0.01 %/°F)
**Response time**: ≤ 0.5 sec. (0 – 90 %)
**Dielectric strength**: 2000 V AC @1 minute (input or output to ground)

## EXTERNAL DIMENSIONS & TERMINAL ASSIGNMENTS unit: mm (inch)

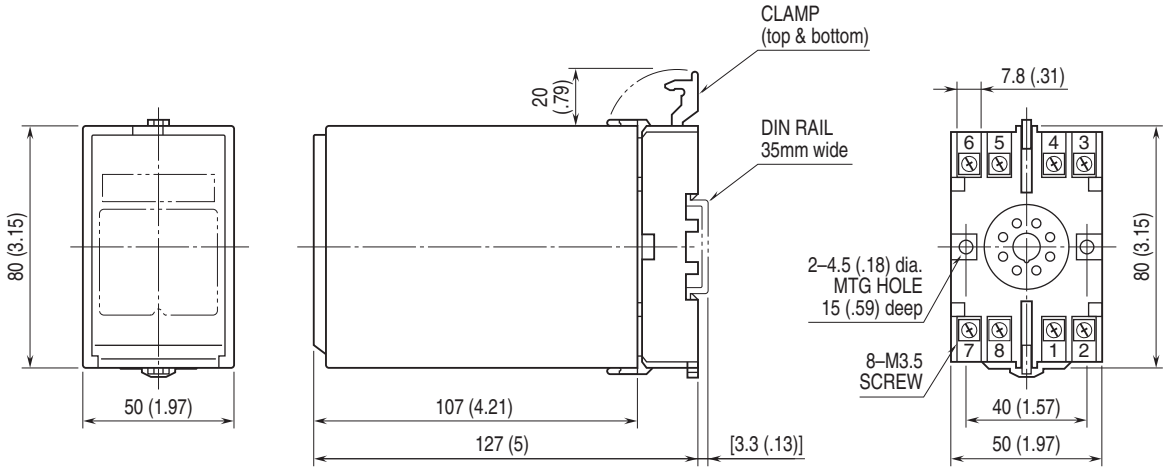


• When mounting, no extra space is needed between units.

## SCHEMATIC CIRCUITRY & CONNECTION DIAGRAM

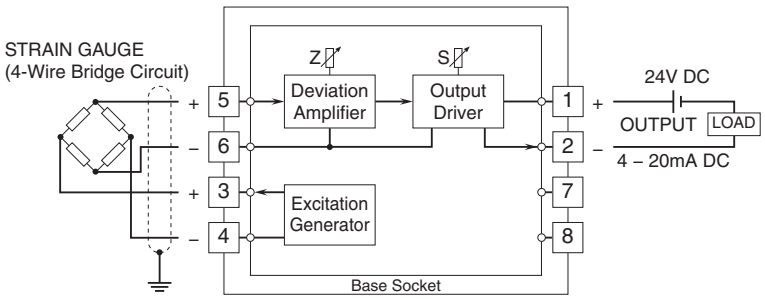


⚠ Specifications are subject to change without notice.



M-SYSTEM CO., LTD.
http://www.m-system.co.jp/