Rev	AWO #	Description	Date	Appr
-		RELEASED	1/08/10	

APPROVED: _____

DATE: _____ TITLE: _____

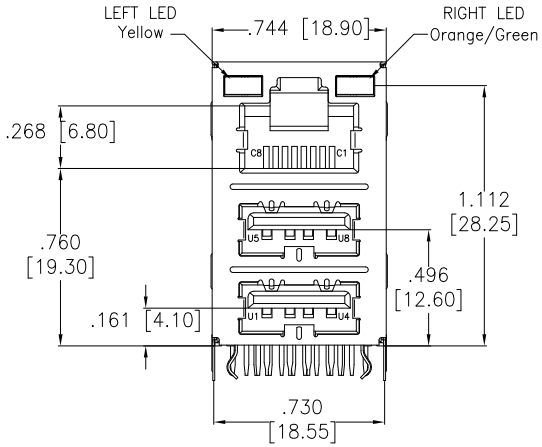

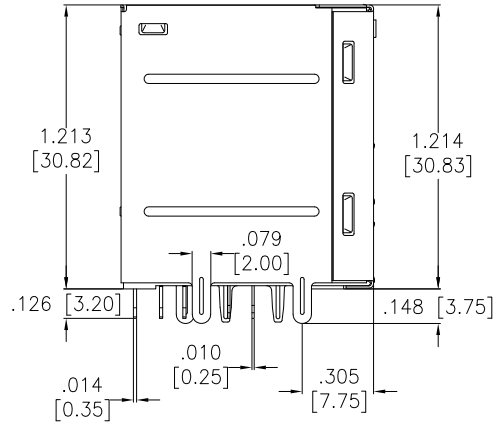

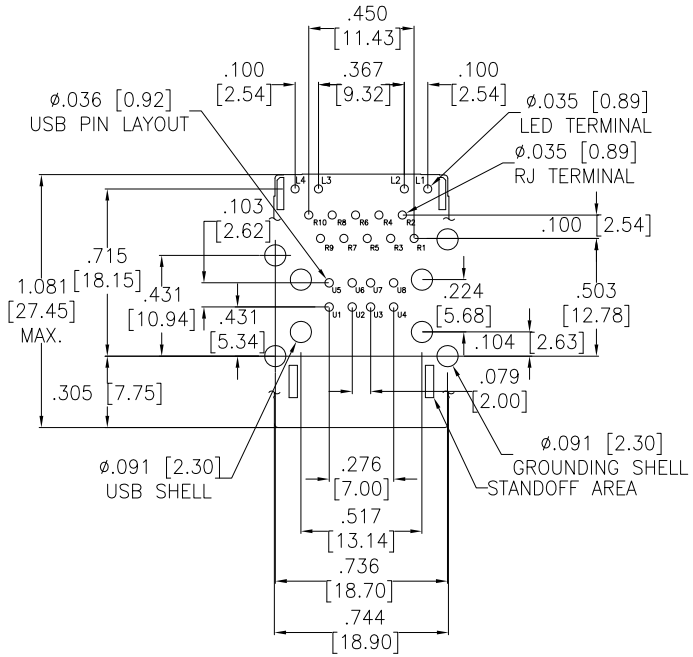

RECOMMENDED PCB LAYOUT

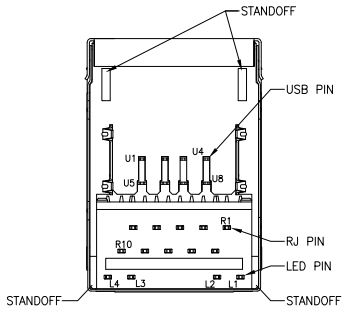

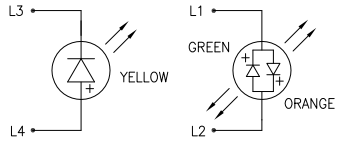

X	PLATING
0	15 ?in Gold
1	30 ?in Gold
2	50 ?in Gold

SPECIFICATIONS:

Material:
Insulator: PBT, glass reinforced, rated UL 94V-0
Insulator color: Black
Contacts: Phopsphor Bronze
Shield: Copper Alloy, Nickel plated

Contact Plating:
Gold Flash over Nickel underplate on contact area,
Tin over Copper underplate on tails
(See chart for thickness).

Electrical:
RJ45:
Insulation Resistance: 500M ohm Min
Dielectric Withstanding Voltage: 1000VAC Min
USB:
Contact Current Rating: 1.5A Max
Contact Resistance: 30m ohm Max
Insulation Resistance: 1000M ohm Min
Dielectric Withstanding Voltage: 500VAC Min

Temperature Rating:
Operating temperature: 0°C to +70°C

Environmental:
Lead free, RoHS compliant.
Recommended soldering temp: 235°C for 5 sec.

RoHS COMPLIANT

UNLESS OTHERWISE SPECIFIED
ALL DIMENSIONS ARE INCHES [MM]
TOLERANCES: EXCEPT AS NOTED

INCHES		HOLES	
.X	± .10	Ø.X	±.10
.XX	± .020	Ø.XX	±.015
.XXX	± .015	Ø.XXX	±.010

APPROVALS		DATE
DRAWN	DY	1/08/10
CHECKED		
APPROVED		

ADAM TECH
909 Rahway Avenue, Union, NJ 07083
Phone: 908-687-5000 Fax: 908-687-5710

TITLE: MODULAR JACK OVER DUAL USB, W/LED1 YELLOW, LED2 ORANGE/GREEN

SIZE	PART NO.	REV.
X	MTJ-DUSB-88JX1-FS-LM-M86	-

REF: S00073T | SCALE: NTS | SHEET 1 OF 2