Rev	AWO #	Description	Date	Appr
-	349	Released	1/15/04	

APPROVED: _____

DATE: _____ TITLE: _____

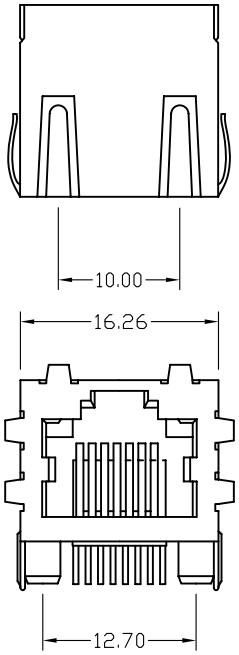

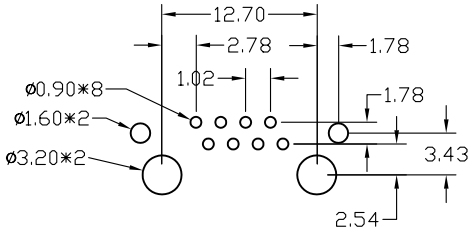

RECOMMENDED P.C.B LAYOUT

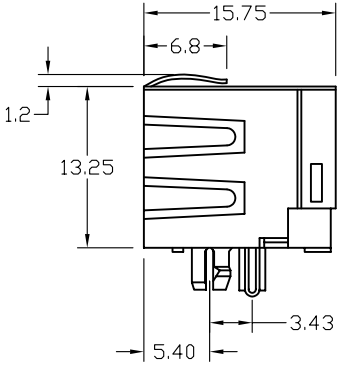

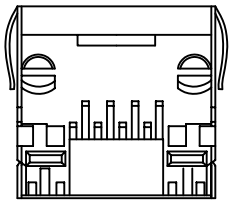

SPECIFICATION :

1. Electrical Char.

Insulation Resistance : 500M-Ohm Min.

Contact Resistance : 20milli-Ohm Max.

Rating Current : 1.5A Max.

RatingVoltage : 120V AC.

Dielectric Voltage : 1,000 Vrms 60 Sec. Min.

2. Physical char.

Housing : Nylon 46 (UL 94V-0)

Color : Black Color

Spring Wire : 0.35mm Thickness Phosphor Bronze

Gold Plating Over Nickel

Temperature Range : - 40 /+125 Deg C

Environmental:

Lead free, RoHS compliant.

Recommended soldering temp: 260 for 5 sec.

RoHS COMPLIANT

X	PLATING
0	15 µin Gold
1	30 µin Gold
2	50 µin Gold

UNLESS OTHERWISE SPECIFIED
ALL DIMENSIONS ARE MM [INCHES]
TOLERANCES: EXCEPT AS NOTED

INCHES		HOLES	
.X	± .10	Ø.X	±.10
.XX	± .020	Ø.XX	±.015
.XXX	± .015	Ø.XXX	±.010

APPROVALS		DATE
DRAWN	SLS	8/14/03
CHECKED		
APPROVED		

ADAM TECH

909 Rahway Avenue, Union, NJ 07083

Phone: 908-687-5000 Fax: 908-687-0214

TITLE

MODULAR TELEPHONE JACK, R/A W/ PANEL GROUNDS

SIZE	PART NO.	REV.
X	MTJ-88ARX1-FSM-PG6	-

REF: | SCALE: NTS | SHEET 1 OF 1