Rev	AWO #	Description	Date	Appr
-		RELEASED	05/26/04	
A		REDRAWN	11/1/10	

APPROVED: _____

DATE: _____ TITLE: _____

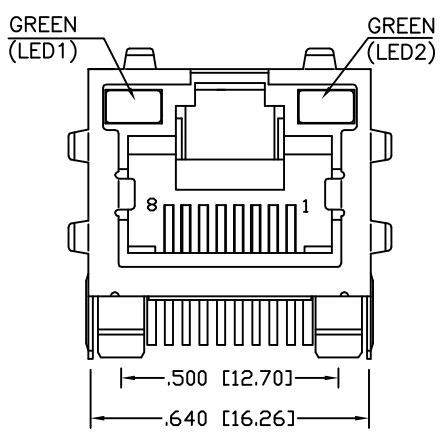

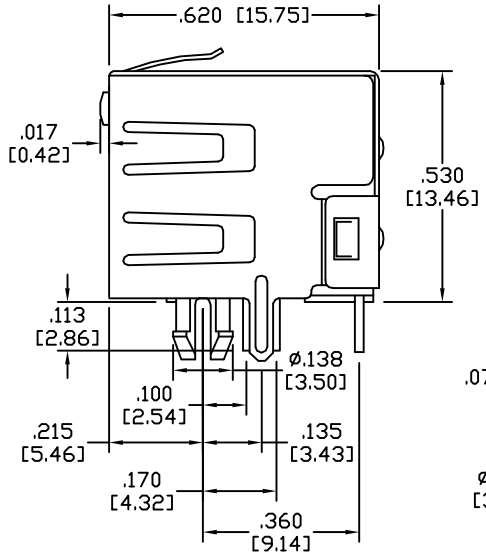

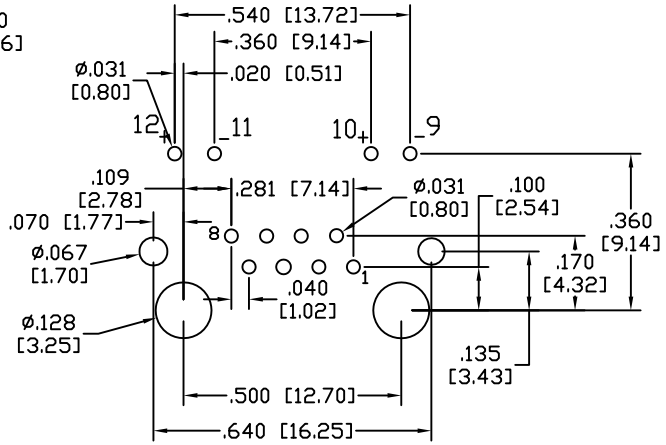

RECOMMENDED PCB LAYOUT

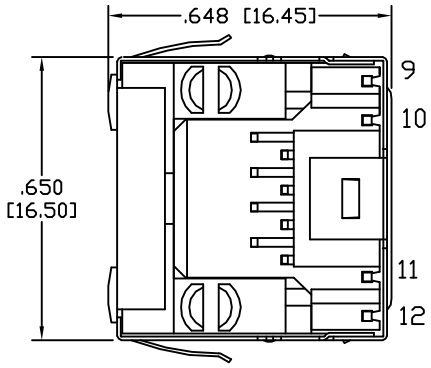

X	PLATING
0	15 uin Gold
1	30 uin Gold
2	50 uin Gold

SPECIFICATIONS:

Material:
Insulator: PBT, rated UL 94V-0
Insulator color: Black
Contacts: Phosphor Bronze
Shield: Brass, Nickel plated

Plating:
Gold flash over Nickel underplate on contact area,
Tin over copper underplate on soldier tails.
(See chart for thickness)

Electrical:
Operating voltage: 125 VAC max
Current rating: 1.5 Amps max
Contact resistance: 20 mohms max.
Insulation resistance: 1000 Mohms min @ 500 VDC
Dielectric withstanding voltage: 1,000 VAC for 1 minute

Temperature Rating:
Operating temperature: -40°C to +85°C

Environmental:
Lead free, RoHS compliant.
Recommended soldering temp: 235°C for 5 sec.

RoHS COMPLIANT

UNLESS OTHERWISE SPECIFIED
ALL DIMENSIONS ARE MM [INCHES]
TOLERANCES: EXCEPT AS NOTED

INCHES		HOLES	
.X	± .10	Ø.X	±.10
.XX	± .020	Ø.XX	±.015
.XXX	± .015	Ø.XXX	±.010

APPROVALS		DATE
DRAWN	BAS	05/26/04
CHECKED		
APPROVED		

ADAM TECH
909 Rahway Avenue, Union, NJ 07083
Phone: 908-687-5000 Fax: 908-687-0214

TITLE
MODULAR JACK GANGED, 1 PORT, 8P8C
W/ LED1 GREEN, LED2 GREEN

SIZE	PART NO.	REV.
X	MTJ-88ARX1-FSM-PG-LD	A

REF: S00005C | SCALE: NTS | SHEET 1 OF 1