MTCH6301

MTCH6301 Projected Capacitive Touch Controller

Description:

MTCH6301 is a turnkey projected capacitive controller that allows easy integration of multi-touch and gestures to create a rich user interface in your design. Through a sophisticated combination of Self and Mutual Capacitive scanning for both XY screens and touch pads, the MTCH6301 allows designers to quickly and easily integrate projected capacitive touch into their application.

Applications:

- Human-Machine Interfaces with Configurable Button, Keypad or Scrolling Functions
- Single-Finger Gesture-Based Interfaces to Swipe, Scroll or Doubletap Controls
- Home Automation Control Panels
- Security Control Keypads
- Automotive Center Stack Controls
- Gaming Devices
- Remote Control Touch Pads

Touch Sensor Support:

- Up to 13RX x 18TX Channels
- Individual Channel Tuning for Optimal Sensitivity
- Works with Printed Circuit Board (PCB) Sensors, Film, Glass and Flexible Printed Circuit (FPC) Sensors
- Cover Layer Support:
  - Plastic: up to 3 mm
  - Glass: up to 5 mm

Touch Performance:

- > 100 Reports per Second Single Touch
- > 60 Reports per Second Dual Touch
- Up to 12-Bit Resolution Coordinate Reporting

Touch Features:

- Multi-touch (up to ten touches)
- Gesture Detection and Reporting
- Single and Dual Touch Drawing
- Self and Mutual Signal Acquisition
- Built-in Noise Detection and Filtering

Power Management:

- Configurable Sleep mode
- Integrated Power-on Reset and Brown-out Reset
- 200 µA Sleep Current (typical)

Communication Interface:

- I^2C™ (up to 400 kbps)

Operating Conditions:

- 2.4V to 3.6V, -40ºC to +105ºC

Package Types:

- 44-Lead TQFP
- 44-Lead QFN

© 2012-2014 Microchip Technology Inc.

Table of Contents

1.0 System Block Diagram 3
2.0 Configuration and Setup 3
3.0 Pin Diagram 4
4.0 Pinout I/O Descriptions 5
5.0 Layout 6
6.0 Communication Protocol 12
7.0 Memory Map 21
8.0 Special Features 23
9.0 Electrical Characteristics 26
10.0 Ordering Information 30
11.0 Packaging Information 31
The Microchip Web Site 38
Customer Change Notification Service 38
Customer Support 38
Worldwide Sales and Service 40

TO OUR VALUED CUSTOMERS

It is our intention to provide our valued customers with the best documentation possible to ensure successful use of your Microchip products. To this end, we will continue to improve our publications to better suit your needs. Our publications will be refined and enhanced as new volumes and updates are introduced.

If you have any questions or comments regarding this publication, please contact the Marketing Communications Department via E-mail at **docerrors@microchip.com**. We welcome your feedback.

Most Current Data Sheet

To obtain the most up-to-date version of this data sheet, please register at our Worldwide Web site at:

http://www.microchip.com

You can determine the version of a data sheet by examining its literature number found on the bottom outside corner of any page. The last character of the literature number is the version number, (e.g., DS30000000A is version A of document DS30000000).

Errata

An errata sheet, describing minor operational differences from the data sheet and recommended workarounds, may exist for current devices. As device/documentation issues become known to us, we will publish an errata sheet. The errata will specify the revision of silicon and revision of document to which it applies.

To determine if an errata sheet exists for a particular device, please check with one of the following:

- Microchip's Worldwide Web site; **http://www.microchip.com**
- Your local Microchip sales office (see last page)

When contacting a sales office, please specify which device, revision of silicon and data sheet (include literature number) you are using.

Customer Notification System

Register on our web site at **www.microchip.com** to receive the most current information on all of our products.

© 2012-2014 Microchip Technology Inc.

1.0 SYSTEM BLOCK DIAGRAM

FIGURE 1-1: SYSTEM BLOCK DIAGRAM

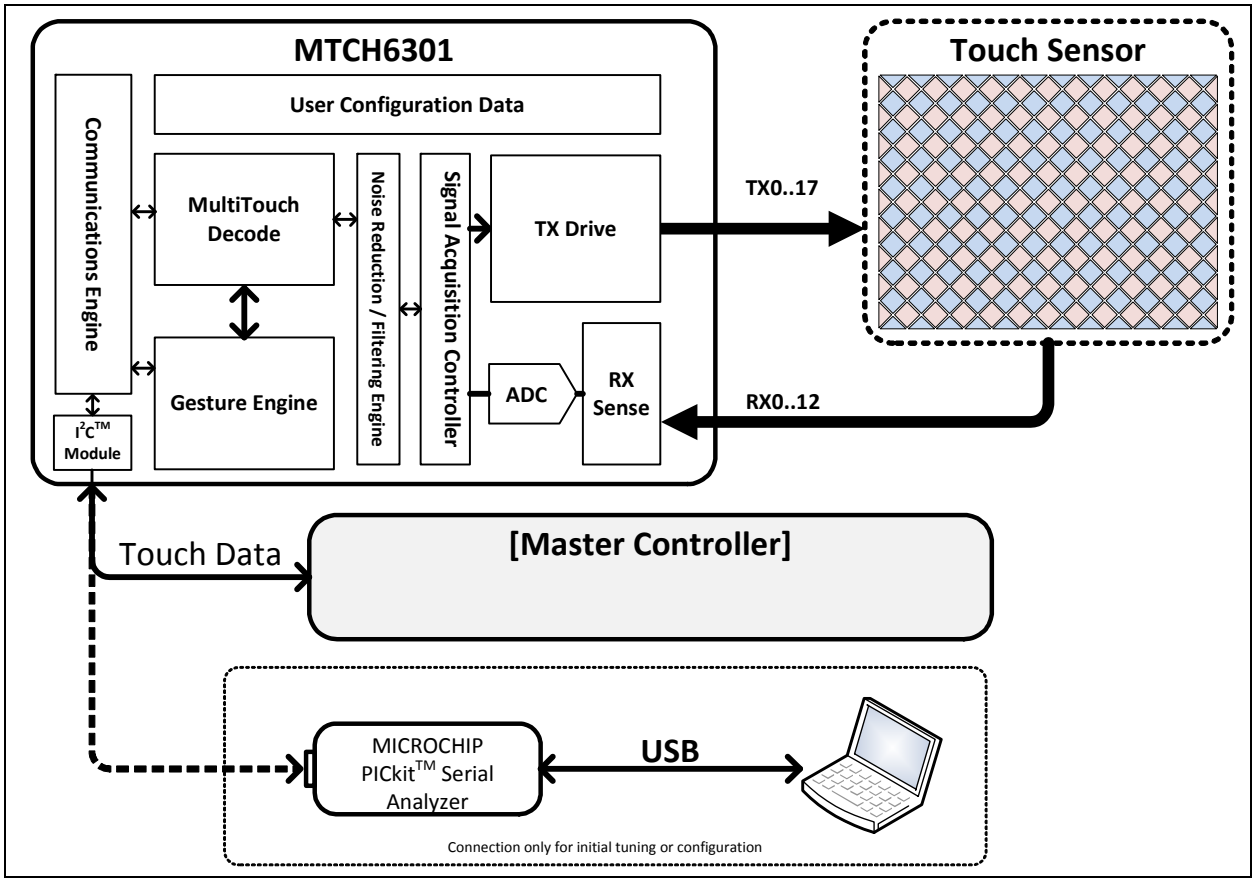

2.0 CONFIGURATION AND SETUP

The MTCH6301 is preconfigured for a 12 Receiver (RX)/9 Transmitter (TX) touch sensor, mapped as shown in **Section 5.1 "Typical Application Circuit"**. While the device will work out-of-the-box using this specific sensor configuration, most applications will require additional configuration and sensor tuning to determine the correct set of parameters to be used in the final application.

Microchip provides a PC-based configuration tool for this purpose, available in the mTouch™ Sensing Solution Design Center (www.microchip.com/mtouch). Use of this tool requires a PICkit™ Serial Analyzer (updated with MTCH6301 support), as well as access to the I^2C communications bus of the MTCH6301 device.

Once the development process is complete, this modified parameter set must either be written permanently to the controller via NVRAM (see **Section 8.3 "Nonvolatile RAM (NVRAM)"**), or alternatively, it can be sent every time the system is powered on. Both the PICkit Serial Analyzer and the master I^2C controller can be used for this purpose.

3.0 PIN DIAGRAM

FIGURE 3-1: 44-PIN TQFP, QFN(1,2)

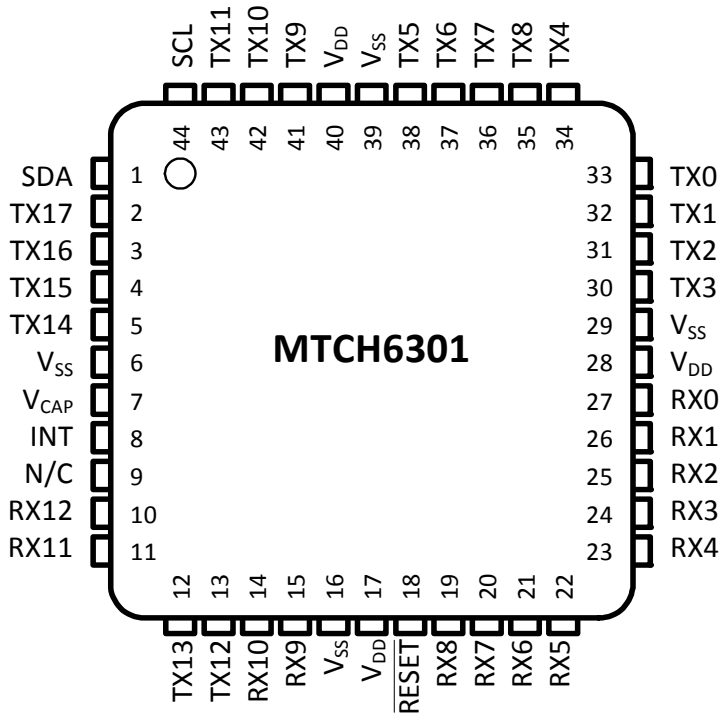

Note 1: All RX/TX are remappable. Refer to **Section 5.6 "Sensor Layout Configuration"** for further information.

2: The metal plate at the bottom of the device is not connected to any pins and it is recommended to be connected to VSS externally.

© 2012-2014 Microchip Technology Inc.

4.0 PINOUT I/O DESCRIPTIONS

TABLE 4-1: PINOUT I/O DESCRIPTIONS

Pin Name	Pin Number	Pin Type	Description
$\overline{\text{RESET}}$	18	I/P	Reset Device (active-low)
SCL	44	I	Synchronous Serial Clock Input/Output for I^2C™
SDA	1	I/O	Synchronous Serial Data Input/Output for I^2C™
INT	8	O	Interrupt (from MTCH6301 to master) for I^2C™
RX0	27*	I/O	RX Sense (or TX Drive) (*RX0/RX12 cannot be used for TX Drive)
RX1	26	I/O	
RX2	25	I/O	
RX3	24	I/O	
RX4	23	I/O	
RX5	22	I/O	
RX6	21	I/O	
RX7	20	I/O	
RX8	19	I/O	
RX9	15	I/O	
RX10	14	I/O	
RX11	11	I/O	
RX12	10*	I/O	
TX0	33	O	TX Drive
TX1	32	O	
TX2	31	O	
TX3	30	O	
TX4	34	O	
TX5	38	O	
TX6	37	O	
TX7	36	O	
TX8	35	O	
TX9	41	O	
TX10	42	O	
TX11	43	O	
TX12	13	O	
TX13	12	O	
TX14	5	O	
TX15	4	O	
TX16	3	O	
TX17	2	O	
N/C	9	N/C	No Connect
V_{CAP}	7	P	CPU Logic Filter Capacitor Connection
V_{DD}	17, 28, 40	P	Positive Supply for Peripheral Logic and I/O Pins
V_{SS}	6, 16, 29, 39	P	Ground Reference for Logic and I/O Pins; This pin must be connected at all times.

© 2012-2014 Microchip Technology Inc.

5.0 LAYOUT

5.1 Typical Application Circuit

The following schematic portrays a typical application circuit, based on a 12RX/ 9TX touch sensor.

FIGURE 5-1: TYPICAL APPLICATION CIRCUIT

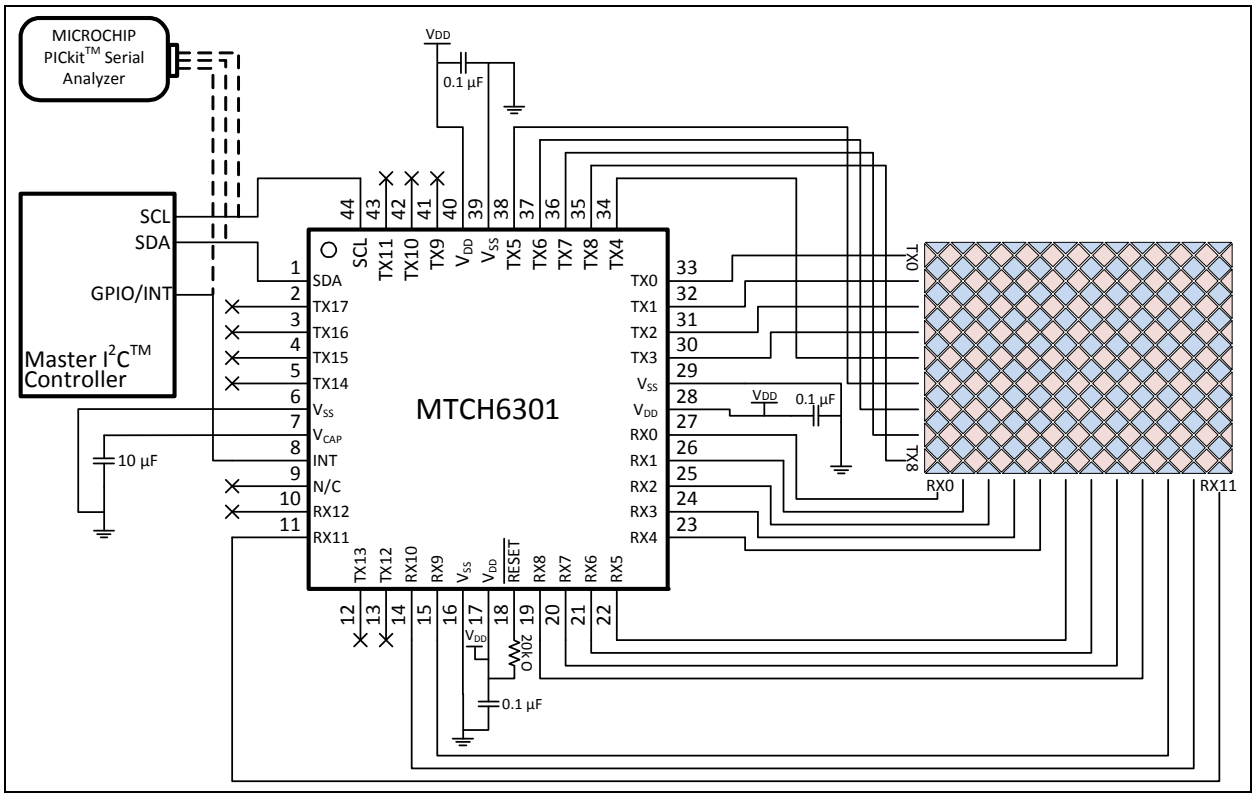

5.2 Decoupling Capacitors

The use of decoupling capacitors on power supply pins, such as VDD and VSS, is required (see Figure 5-1). Consider the following criteria when using decoupling capacitors:

1. Value and type of capacitor:

A value of 0.1 µF (100 nF), 10-20V is recommended. The capacitor should be a low Equivalent Series Resistance (low ESR) capacitor and have resonance frequency in the range of 20 MHz and higher. It is further recommended that ceramic capacitors be used.

2. Placement on the Printed Circuit Board:

The decoupling capacitors should be placed as close to the pins as possible. It is recommended that the capacitors be placed on the same side of the board as the device. If layout space is constrained, the capacitor can be placed on another layer on the PCB and connected using a via. Please ensure that the trace length from the pin to the capacitor is less than one-quarter inch (6 mm) in length.

3. Handling high-frequency noise:

If the board is experiencing high-frequency noise, upward of tens of MHz, add a second ceramic-type capacitor in parallel to the above-described decoupling capacitor. The value of the second capacitor can be in the range of 0.01 µF to 0.001 µF. Place this second capacitor next to the primary decoupling capacitor. In high-speed circuit designs, consider implementing a decade pair of capacitances as close to the power and ground pins as possible (for example, 0.1 µF in parallel with 0.001 µF).

4. Maximizing performance:

On the board layout from the power supply circuit, run the power and return traces to the decoupling capacitors first, and then to the device pins. This ensures that the decoupling capacitors are first in the power chain. It is equally important to keep the trace length between the capacitor and the power pins to a minimum, thereby reducing PCB track inductance.

© 2012-2014 Microchip Technology Inc.

5.3 Bulk Capacitors

The use of a bulk capacitor is recommended to improve power supply stability. Typical values range from 4.7 µF to 47 µF. This capacitor should be located as close to the device as possible.

5.4 Capacitor on Internal Voltage Regulator (V_{CAP})

A low ESR (1 ohm) capacitor is required on the V_{CAP} pin, which is used to stabilize the internal voltage regulator output. The V_{CAP} pin must not be connected to V_{DD} and must have a C_{EFC} capacitor with at least a 6V rating, connected to ground. The type can be ceramic or tantalum.

5.5 Touch Sensor Design Considerations

5.5.1 SENSOR PATTERNS AND PCB LAYOUT

With regard to touch sensor patterns, please refer to the mTouch Design Center (www.microchip.com/mtouch) for additional information on designing and laying out a touch sensor pattern, as well as using the correct techniques for PCB trace routing.

5.5.2 PROTOTYPING DESIGNS

Due to their complexity, touch sensor designs typically require a thorough debugging phase to ensure a reliable product. If possible, it is suggested that flexible prototyping hardware be created with this in mind. A common example is providing external access to the communication lines for quick test and tuning while in-circuit. Microchip's Projected Capacitive Configuration Utility (PCU) and a configured PICkit Serial Analyzer can assist with early prototype development. See the online Microchip MTCH6301 device page for these and other support materials.

5.5.3 SENSOR OVERLAY MATERIAL

To prevent saturation of sensor levels, a minimum 0.5 mm plastic or glass overlay is required for proper operation of the device, even during a prototyping phase, even if this value is different than the final design.

Note:	At no time should the device be expected to respond correctly to a user touching a bare PCB sensor.

5.5.4 OPERATION WITH AN LCD

MTCH6301 has integrated algorithms to detect and minimize the effects of noise, but proper care should always be taken in selecting an LCD and support components with a focus on reducing noise as much as possible. Since the interaction between the touch sensor and display is highly dependent upon the physical arrangement of the components, proper testing should always be executed with a fully integrated device. Please reference your projected capacitive touch screen manufacturer's integration guide for additional design considerations.

5.6 Sensor Layout Configuration

To properly configure a sensor from a physical layout standpoint, the following registers must be correctly set:

- RX Pin Map/TX Pin Map
- RX Scaling Coefficient/TX Scaling Coefficient
- Flip State

5.6.1 RX/TX PIN MAP

By default, the RX and TX pins are set as shown in the Typical Application Circuit (see **Section 5.1 "Typical Application Circuit"**). It is recommended to keep this layout if possible. If a different layout or a different amount of sensor channels is required, the RX and TX pins are configured via the Pin Map register arrays. To access these arrays, please reference **Section 6.0 "Communication Protocol"** and **Section 7.0 "Memory Map"**.

The RX and TX lines are configurable for the purpose of making trace routing and board layout more convenient. Please note that while RX pins can be used as TX pins instead, a single pin cannot be used as *both* an RX and a TX channel concurrently. The pin maps are comprised of Pin Map ID numbers, which are shown in Table 5-1.

TABLE 5-1: PIN MAP ID CHART

Pin	Map ID (RX)	Map ID (TX)
RX0	8	—
RX1	7	26
RX2	6	25
RX3	5	12
RX4	4	11
RX5	3	10
RX6	2	9
RX7	1	1
RX8	0	0
RX9	9	24
RX10	10	23
RX11	11	22
RX12	12	—
TX0	—	13
TX1	—	6
TX2	—	3
TX3	—	2
TX4	—	4
TX5	—	30
TX6	—	29
TX7	—	28
TX8	—	7
TX9	—	14
TX10	—	15
TX11	—	16
TX12	—	5
TX13	—	8
TX14	—	34
TX15	—	33
TX16	—	32
TX17	—	31

5.6.2 RX/ TX SCALING COEFFICIENT

Scaling coefficient registers exist in RAM for each axis (RX/TX) and *must* be modified in accordance with the number of channels that are in use (see Table 5-2). See **Section 7.0 "Memory Map"** for the location of these parameters.

TABLE 5-2: RX/TX SCALING COEFFICIENTS

Number of Channels	RX/TX Scaling Coefficient	
	(Base 10)	(Base 16)
3	21845	0x5555
4	16384	0x4000
5	13107	0x3333
6	10922	0x2AAA
7	9362	0x2492
8	8192	0x2000
9	7281	0x1C71
10	6553	0x1999
11	5957	0x1745
12	5461	0x1555
13	5041	0x13B1
14	4681	0x1249
15	4369	0x1111
16	4096	0x1000
17	3855	0x0F0F
18	3640	0x0E38

© 2012-2014 Microchip Technology Inc.

5.6.3 SENSOR ORIENTATION (FLIP STATE)

Once the sensor layout is complete, the final output orientation is configured using the Flip State register, as shown in Register 5-1. The Flip State register can be adjusted during operation to support applications where rotation occurs during use. Possible flip state configurations are detailed in Figure 5-2.

Figure 5-2 shows the flip state values for all possible sensor orientations.

REGISTER 5-1: FLIP STATE REGISTER

U-0	U-0	U-0	U-0	U-0	R/W-0	R/W-0	R/W-1
—	—	—	—	—	SWAP	TXFLIP	RXFLIP
bit 7							bit 0

Legend:			
R = Readable bit	W = Writable bit	U = Unimplemented bit, read as '0'	
-n = Value at POR	'1' = Bit is set	'0' = Bit is cleared	x = Bit is unknown

bit 7-3 **Unimplemented:** Read as '0'

bit 2 **SWAP:**
1 = RX axis horizontal; TX axis vertical
0 = RX axis vertical; TX axis horizontal

bit 1 **TXFLIP:**
1 = Invert the TX axis
0 = Do not invert the TX axis

bit 0 **RXFLIP:**
1 = Invert the RX axis
0 = Do not invert the RX axis

FIGURE 5-2: SENSOR ORIENTATION CHART

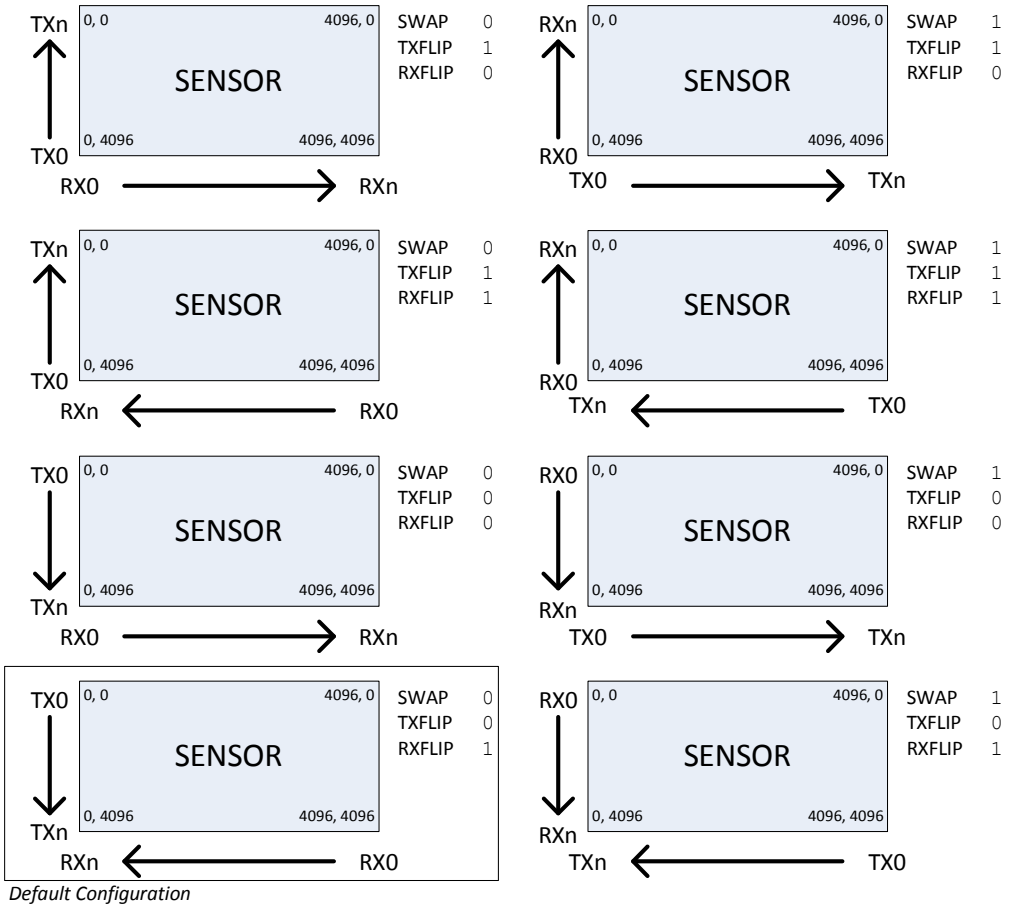

5.6.4 UNUSED RX/TX PINS

Unused RX/TX pins are driven to Vss automatically and should be left as no connects.

© 2012-2014 Microchip Technology Inc.

5.7 Example Custom Application Layout

An example 4RX/11TX sensor is shown in Figure 5-3. In addition to using a completely modified pin layout, this example differs from the default configuration by also having the TX axis along the bottom (X) and RX axis along the side (Y). Note that some RX pins are also used as TX lines in this example.

FIGURE 5-3: CUSTOM APPLICATION LAYOUT

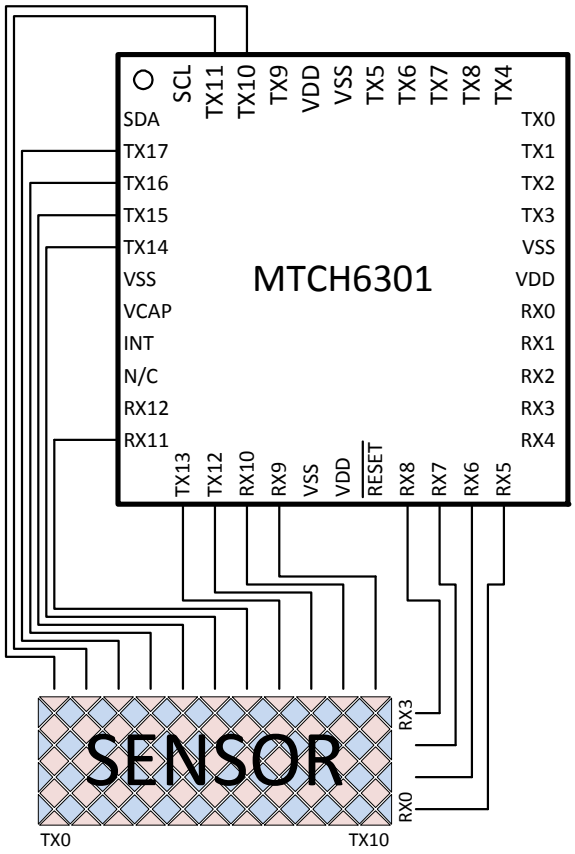

Sensor Line		MTCH6301 Pin	Map ID
TX	0	TX10	15
	1	TX11	16
	2	TX17	31
	3	TX16	32
	4	TX15	33
	5	TX14	34
	6	RX11	22
	7	TX13	8
	8	TX12	5
	9	RX10	23
	10	RX9	24
RX	0	RX5	3
	1	RX6	2
	2	RX7	1
	3	RX8	0

The Pin Map register array for this particular setup is set as follows:

RX Pin Map: {3,2,1,0}

TX Pin Map: {15,16,31,32,33,34,22,8,5,23,24}

The resulting scaling coefficient for the custom application example is shown in Table 5-3. The scaling coefficients were derived using Table 5-2.

TABLE 5-3: CUSTOM APPLICATION SCALING VALUES

Axis	Channels	Scaling Coefficient
RX	4	16384
TX	11	5957

Using Figure 5-2, the Flip State register should be set to '0b110' or 0x6.

6.0 COMMUNICATION PROTOCOL

6.1 Overview

The MTCH6301 I^{2}C protocol follows a serial streaming format, not a register-based protocol. To achieve this, the device will assert the INT pin whenever a new packet of data is ready to be transmitted to the host. This will happen under two conditions:

1. New touch or gesture data is available.
2. A command has been sent to the controller and the response to this command is ready.

Note:	Note that initiating a read from the device when INT is in a logic '0' state will result in an unpredictable response.

6.2 I^{2}C™ Pin Specification

6.2.1 SERIAL DATA (SDA)

The Serial Data (SDA) signal is the data signal of the device. The value on this pin is latched on the rising edge of the SCL signal when the signal is an input. With the exception of the Start (Restart) and Stop conditions, the high or low state of the SDA pin can only change when the clock signal on the SCL pin is low. During the high period of the clock, the SDA pin's value (high or low) must be stable. Changes in the SDA pin's value while the SCL pin is HIGH will be interpreted as a Start or a Stop condition.

6.2.2 SERIAL CLOCK (SCL)

The Serial Clock (SCL) signal is the clock input signal of the device, generated by the host. The rising edge of the SCL signal latches the value on the SDA pin. MTCH6301 employs clock stretching and this should be taken into account by the master controller. The maximum speed at which MTCH6301 can operate is 400 kbps.

6.2.3 INTERRUPT (INT)

This pin is utilized by MTCH6301 to signal that data is available and that the master controller should invoke a master read. INT is an active-high pin and is held low during all other activities.

Note:	If the device is not read within 25 ms of asserting the INT pin, a timeout will occur and data will no longer be available.

6.2.4 DEVICE ADDRESSING

The MTCH6301 7-bit base address is 0x25 and is not configurable by the user. Every transmission must be prefixed with this address, as well as a bit signifying whether the transmission is a master write ('0') or master read ('1'). After appending this Read/Write bit to the base address, this first byte becomes either 0x4A (write) or 0x4B (read).

© 2012-2014 Microchip Technology Inc.

6.3 Generic Read/Write Protocol

6.3.1 MASTER READ WAVEFORM

FIGURE 6-1: MASTER READ WAVEFORM

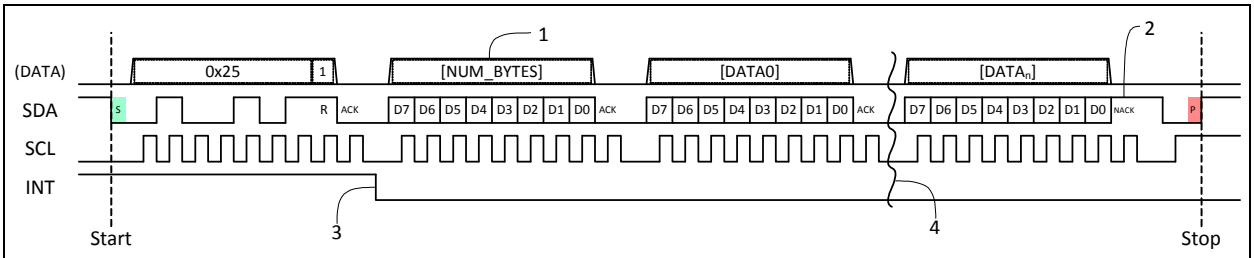

Note 1: The first byte read from the device denotes the number of bytes *to follow*.

2: The last byte read from the device *must* be followed by a nACK ('1') from the host controller. All other bytes should be followed with ACK ('0').

3: INT will be set low within 10 uS of a correct I²C™ address match.

4: All data (DATA0 – DATAn) must be read at once within a single I²C™ transaction, and Restart conditions are not supported.

6.3.2 MASTER WRITE WAVEFORM

FIGURE 6-2: MASTER WRITE WAVEFORM

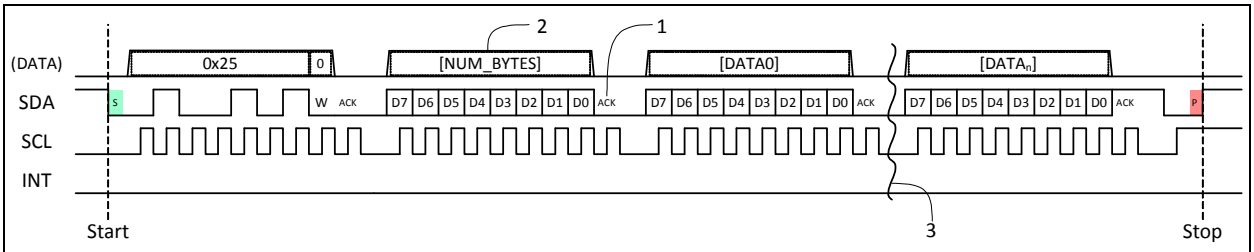

Note 1: If the device is sleeping, it *will* ACK the address byte, but *will not* ACK the first byte of the transmission until it is awake. See **Section 9. "Send Enable Touch command (0x00)."** for details.

2: The first byte written to the controller denotes the number of bytes *to follow*.

3: Although it is not required all data be written in a single I²C™ transaction, it is recommended to reduce the chance of a timeout occurring.

6.3.3 TOUCH PACKET PROTOCOL

Fully-processed touch coordinates will be sent out as they are processed by MTCH6301. Since it is a slave device, the INT pin will be asserted whenever one of these packets is ready for transmission, requiring the master to initiate a Read command. In other words, no Write command is necessary before reading one of these packets.

FIGURE 6-3: EXAMPLE TOUCH PACKET WAVEFORM

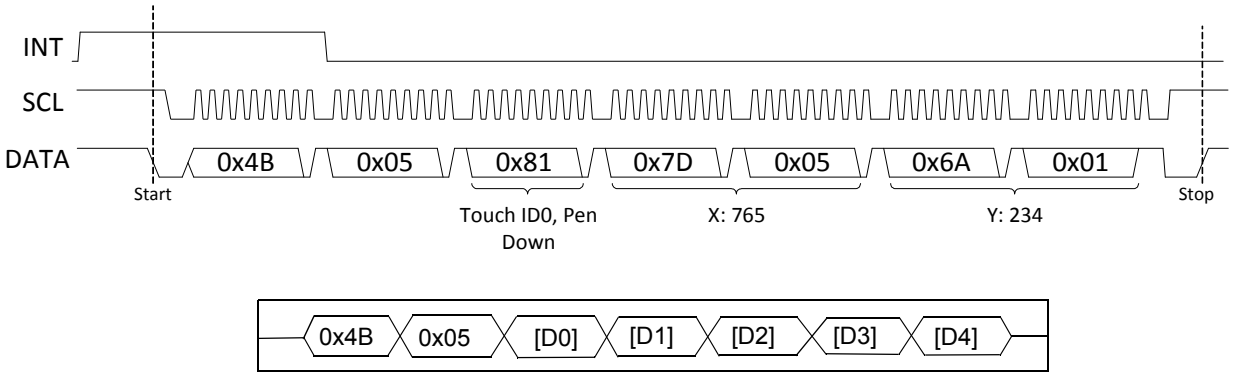

Byte	Bit 7	Bit 6	Bit 5	Bit 4	Bit 3	Bit 2	Bit 1	Bit 0
D0	1	TOUCHID<3:0>				TCH (0)	0	PEN
D1	0	X<6:0>						
D2	0	0	0	X<11:7>				
D3	0	Y<6:0>						
D4	0	0	0	Y<11:7>				

TOUCHID: Touch ID (0-9)

PEN: Pen State

0 = Pen Up

1 = Pen Down

X: X Coordinate of touch

Y: Y Coordinate of touch

TCH: Always '0'; it denotes a touch packet (vs. gesture)

© 2012-2014 Microchip Technology Inc.

6.4 Gesture Protocol

Similar to touch packets, the following packet is transmitted whenever a gesture is performed on the sensor. This feature can be enabled via the Comm Packet CFG register (see **Section 7.0 "Memory Map"**).

Note 1: Gestures are *not* enabled by default.

2: For any *hold* gestures, packets are continuously sent until the gesture is no longer being held.

FIGURE 6-4: GESTURE PACKET WAVEFORM

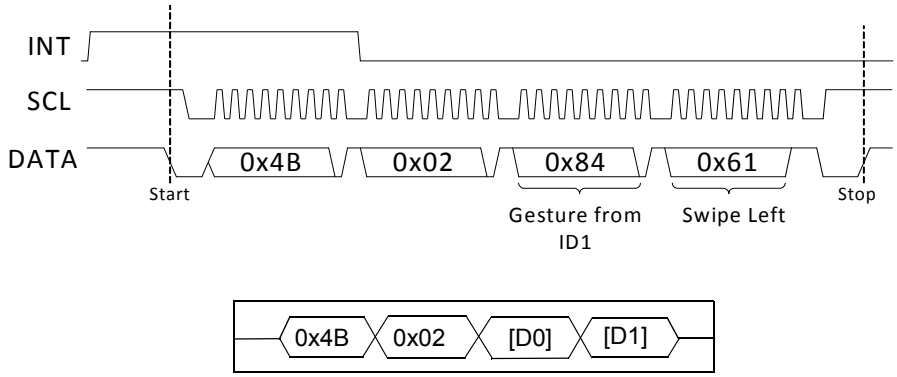

Byte	Bit 7	Bit 6	Bit 5	Bit 4	Bit 3	Bit 2	Bit 1	Bit 0
D0	1	TOUCHID<3:0>				GEST -1	0	0
D1	0	GESTURE<6:0>						

TOUCHID: Touch ID (0-9)

GESTURE: Gesture ID

0x10	Single Tap	0x11	Single Tap (hold)
0x20	Double Tap		
0x31	Up Swipe	0x32	Up Swipe (hold)
0x41	Right Swipe	0x42	Right Swipe (hold)
0x51	Down Swipe	0x52	Down Swipe (hold)
0x61	Left Swipe	0x62	Left Swipe (hold)

GEST: Always '1'; it denotes a gesture packet (vs. touch)

6.5 Command Protocol

Bidirectional communication protocol (for reading/writing configuration data) is shown in Figure 6-5.

FIGURE 6-5: COMMAND PROTOCOL

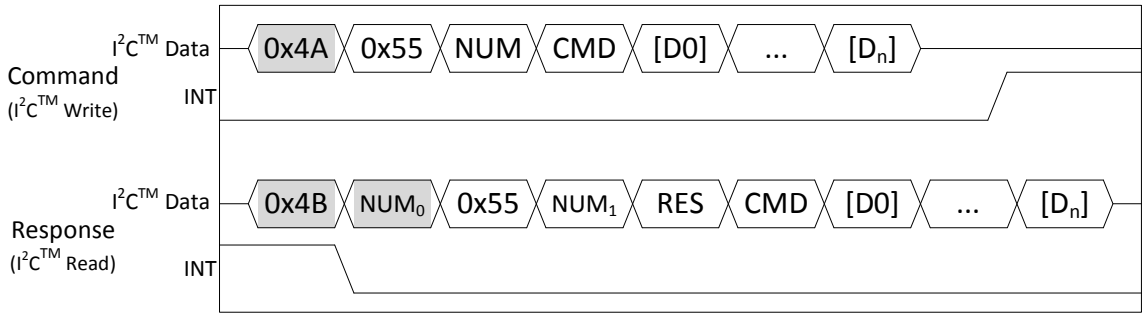

NUM: Number of bytes to follow (true for NUM, NUM_0, NUM_1).

CMD: Command sent/ responded to

RES: Status result of command:

- 0x00 = Success
- 0x80 = Parameter out of range
- 0xFE = Timeout (not enough bytes received)
- 0xFF = Unrecognized command
- 0xFD = Invalid parameter
- 0xFC = Missing or extra parameter

D_0 - D_n: Data associated with command

6.6 Full Command Set

A complete listing of MTCH6301 commands is shown in Table 6-1. Any commands which contain additional data bytes, either sent or received, are shown alongside an example data stream in the following sections.

6.6.1 OVERVIEW

TABLE 6-1: COMMAND SET

CMD ID	Name	Description
0x00	Enable Touch	Enable Touch functionality
0x01	Disable Touch	Disable Touch functionality
0x14	Scan Baseline	Instruct controller to scan for new sensor baseline immediately
0x15	Write Register	Write data to specified register
0x16	Read Register	Read data from specified register
0x17	Write NVRAM	Write all current register values to NVRAM
0x18	Software Sleep	Instruct controller to enter Sleep mode
0x19	Erase NVRAM	Erase the contents of the nonvolatile RAM section
0x1A	Manufacturing Test	Perform manufacturing tests on all sensor I/O channels
0x83	Device ID	Retrieve device ID/version

© 2012-2014 Microchip Technology Inc.

6.6.2 WRITE REGISTER/ READ REGISTER

It writes or reads to a single register. Please note that all registers are volatile, and any modified data will be lost on power-down. To store the current register configuration permanently, the Write NVRAM command should be used.

FIGURE 6-6: WRITE REGISTER COMMAND

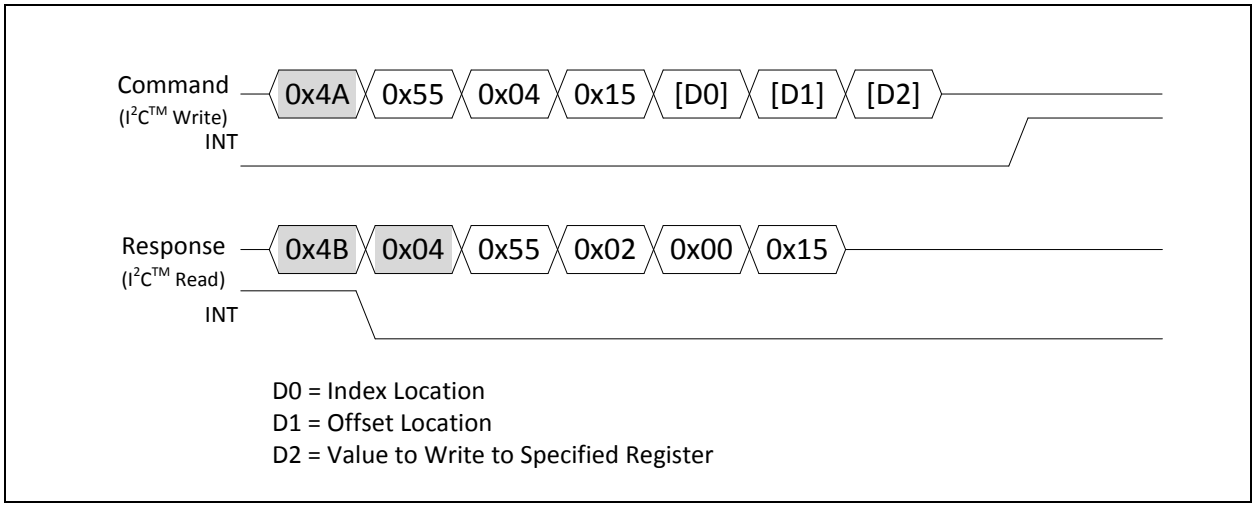

FIGURE 6-7: READ REGISTER COMMAND

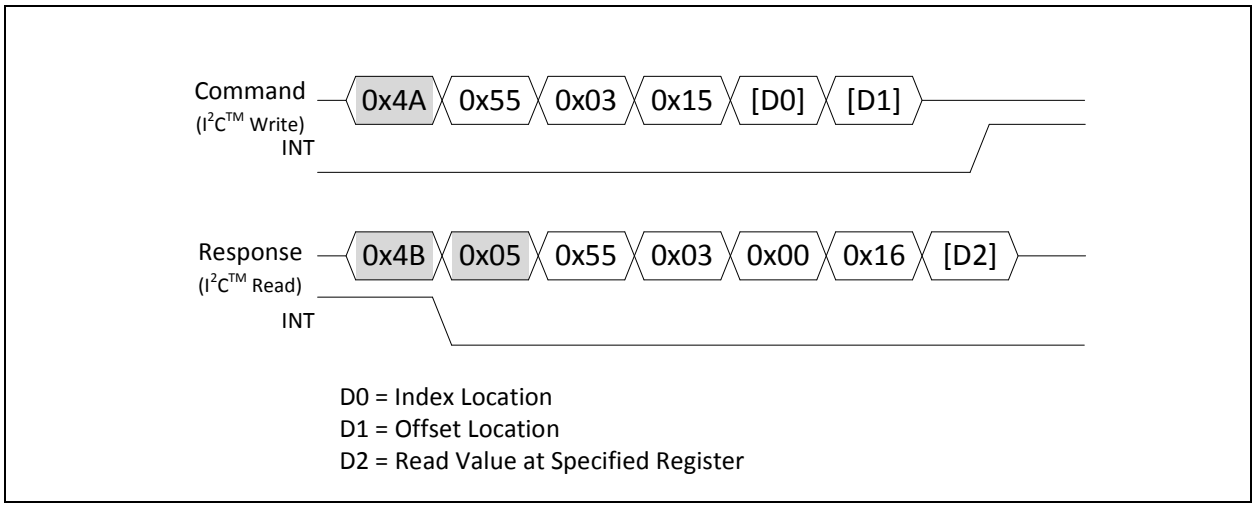

6.6.3 MANUFACTURING TEST

This test performs the following checks on all mapped sensor pins:

1. Short to VDD
2. Short to GND
3. Pin-to-pin short.

If an I/O error is discovered, bits for the pins in question will be set in the TX Short Status and RX Short Status registers.

Please note that:

1. The RX7/RX8 pins will *always* report an error.
2. If the sensor has more than 16 TX channels, then channels 17 and 18 will *never* report an error.

FIGURE 6-8: MANUFACTURING TEST

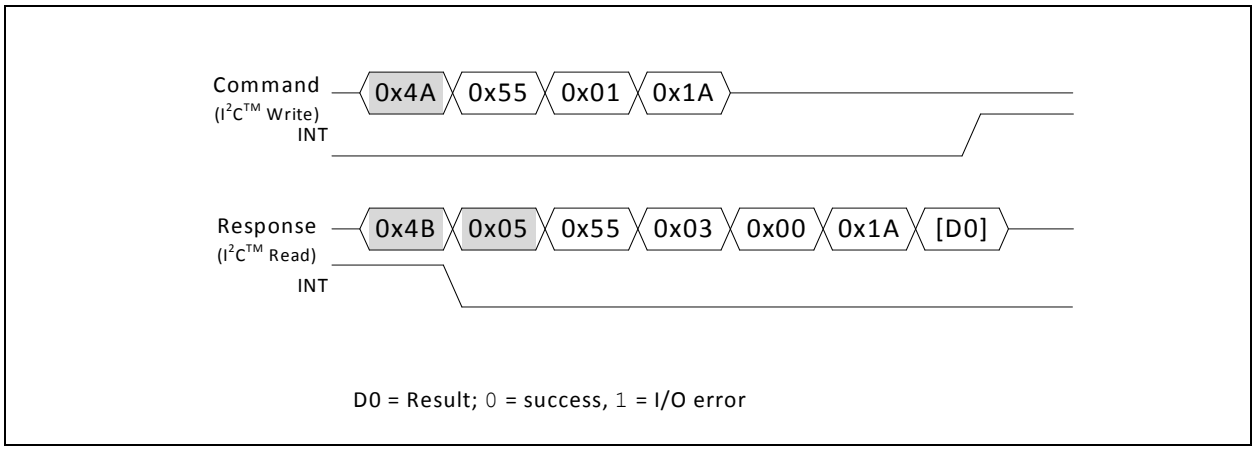

6.6.4 DEVICE ID

It allows the host to read the device ID.

FIGURE 6-9: DEVICE ID

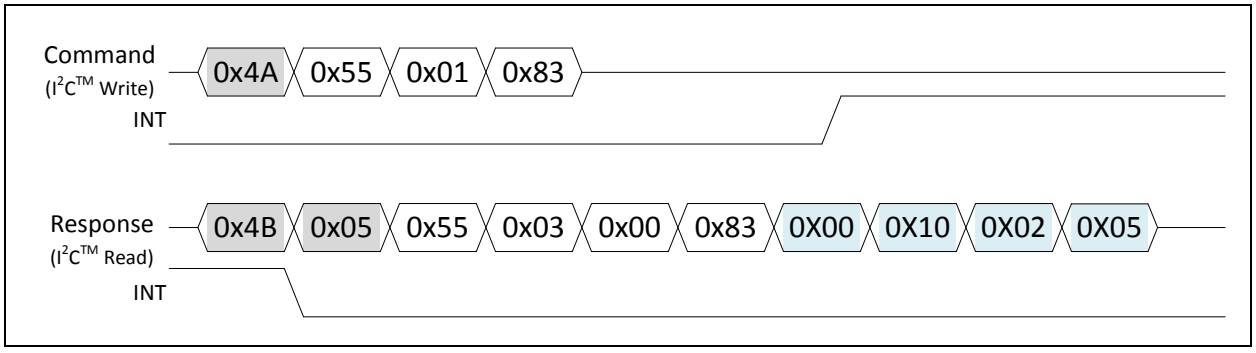

© 2012-2014 Microchip Technology Inc.

6.6.5 TYPICAL I²C COMMAND TRANSMISSION

Figure 6-10 depicts the master controller reading from RAM location 0x01, to determine the number of RX channels the controller is configured to use (0x0C or 12).

FIGURE 6-10: I²C™ COMMAND READ AND WRITE

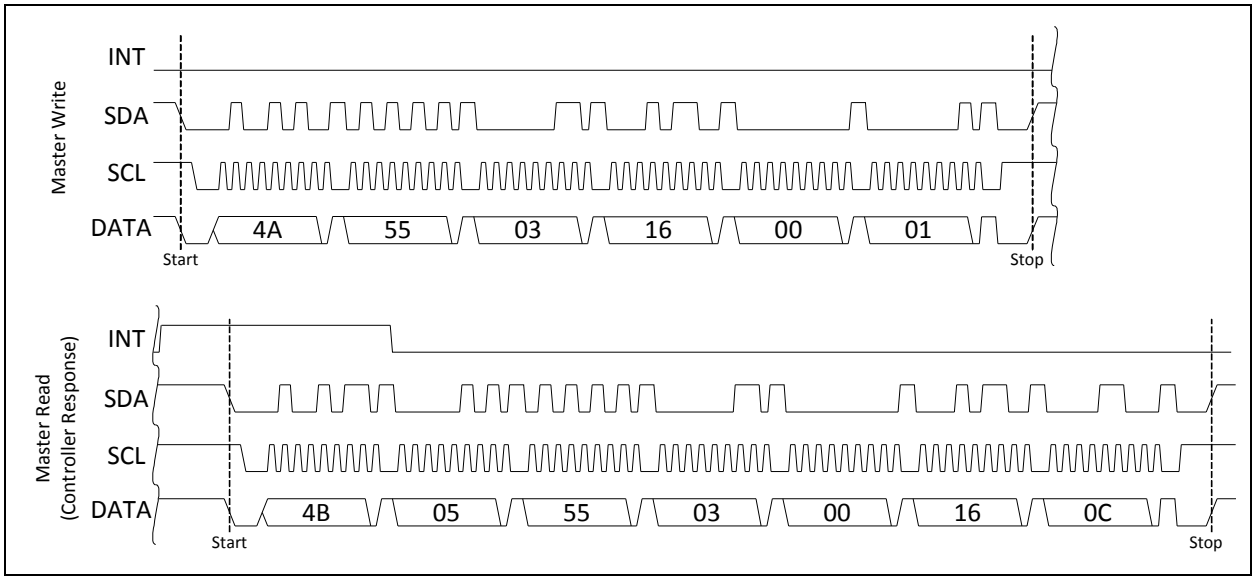

6.7 Wake on I²C

The MTCH6301 is capable of waking up upon receiving an I²C command from the host. Please note that since wake-up time can take up to 350 µs, the controller must resend any I²C bytes that were not acknowledged (ACK) before continuing the transmission.

Since the controller will wake up upon a correct I²C address match, it does not matter which command is sent. For simplicity, the Enable Touch command is recommended.

6.8 $\overline{\text{RESET}}$ Pin Behavior

The MTCH6301 can be reset by driving the $\overline{\text{RESET}}$ pin low. When released, the device will assert the INT pin until it has finished initialization routines. During this time, any communication to the I²C address (0x25) will result in a nACK.

FIGURE 6-11: INT BEHAVIOR AFTER RESET

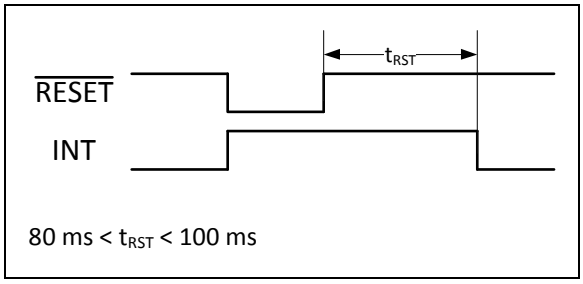

6.9 Recommended Start-up Sequence

For ease of use, it is recommended that all custom parameters be stored in NVRAM at the time of production (or on first power-on) for the lifetime of the chip. Once this has been completed, the start-up procedure for the rest of the product's life should be as follows:

1. Prepare I^2C master/host controller; initialize any components of the system that depend upon the MTCH6301 output.
2. Set $\overline{\text{RESET}}$ low for > 5 µs.
3. Set $\overline{\text{RESET}}$ high.
4. Wait for low state on INT.
5. If desired, check for correct device operation by using the Device ID command.

Note: If the application is designed to use the default parameters, the above start-up procedure should be used.

If the application is such that using the NVRAM to store custom parameters isn't possible, the following start-up procedure is recommended:

1. Prepare I^2C master/host controller; initialize any components of the system that depend upon the MTCH6301 output.
2. Set $\overline{\text{RESET}}$ low for > 5 µs.
3. Set $\overline{\text{RESET}}$ high.
4. Wait for low state on INT.
5. If desired, check for correct device operation by using the Device ID command.
6. Send Disable Touch command (0x01).
7. Write all desired parameters to the device.
8. Send Scan Baseline command (0x14).
9. Send Enable Touch command (0x00).

© 2012-2014 Microchip Technology Inc.

7.0 MEMORY MAP

TABLE 7-1: MTCH6301 MEMORY MAP

Group	Index Byte	Offset Byte	Register Name	Size (Bytes)	Description	Data Range	Default Value
General	0x00	0x01	RX Channels	1	Number of RX Sensor Channels	3-13	12
		0x02	TX Channels	1	Number of TX Sensor Channels	3-18	9
		0x04	RX Scaling <7:0>	2	RX Scaling Coefficient	3640-21845	5461
		0x05	RX Scaling <15:8>				
		0x06	TX Scaling <7:0>	2	TX Scaling Coefficient	3640-21845	7281
		0x07	TX Scaling <15:8>				
Sensor Map	0x01	0x00-0x0C	RX Pin Map	13	RX Pin Map Array	0-12	**Section 5.6.1 "RX/TX Pin Map"**
	0x02	0x00-0x12	TX Pin Map	18	TX Pin Map Array	0-34	**Section 5.6.1 "RX/TX Pin Map"**
Self	0x10	0x00	Self Scan Time	1	Number of self readings to sum per electrode	1-30	5
		0x01	Self Threshold	1	Threshold at which a touch may be present	10-150	40
Mutual	0x20	0x00	Mutual Scan Time	1	Number of mutual readings to sum per node	1-30	9
		0x01	Mutual Threshold	1	Threshold at which a touch may be present	10-150	40
Decoding	0x30	0x00	Flip State	1	This determines the orientation of the sensor with respect to the coordinate output	0b000-0b111	0b001
		0x01	Number of Averages	1	Number of previous touch coordinates to average with current position coordinate (smoothing filter)	1-16	8
		0x04	Minimum Touch Distance	1	Minimum distance (interpolated coordinates) allowed between two touch locations before suppressing the weaker touch.	0-255	150
		0x05	Pen Down Timer	1	Number of successive sensor scans identifying a touch required prior to transmitting touch data	0-10	3
		0x06	Pen Up Timer	1	Number of successive sensor scans without detecting a touch prior to a touch up packet being sent	0-10	3
		0x07	Touch Suppression Value	1	The maximum number of touch points to transmit. Note that ten touch IDs are still analyzed and tracked, just not reported; 0 = Disabled	0-10	0

© 2012-2014 Microchip Technology Inc.

TABLE 7-1: MTCH6301 MEMORY MAP (CONTINUED)

Group	Index Byte	Offset Byte	Register Name	Size (Bytes)	Description	Data Range	Default Value
Gestures	0x50	0x00	RX Swipe Length	1	Minimum swipe distance in the RX direction before gesture is recognized	10-255	160
		0x01	TX Swipe Length	1	Minimum swipe distance in the TX direction before gesture is recognized	10-255	150
		0x02	Swipe Boundary	1	The distance (in interpolated positions) a swipe can move, in the direction opposite to the direction being swiped, before the gesture is canceled.	0-255	150
		0x03	Swipe Hold Threshold	1	The maximum distance (in interpolated positions) a swipe-and-hold gesture can move before the gesture is canceled	0-255	70
		0x04	Swipe Time <7:0>	2	The maximum amount of time (in ms) the user has to perform a swipe after initial pen down	0-65535	200
		0x05	Swipe Time <15:8>				
		0x06	Tap Time <7:0>	2	The maximum amount of time (in ms) the user has to perform a click after initial pen down	0-65535	500
		0x07	Tap Time <15:8>				
		0x08	Tap Threshold	1	The maximum distance (in interpolated positions) a tap gesture can move before it is no longer recognized as a tap	1-255	120
		0x09	Minimum Swipe Velocity	1	The minimum velocity a swipe must maintain to be a swipe gesture. Values below this will either cancel the gesture (if touch removed) or move to the swipe-and-hold state (if touch is still present)	1-50	3
		0x0A	Double Tap Time <7:0>	2	The maximum amount of time allowed between the two taps of a double tap (in ms)	50-1000	350
		0x0B	Double Tap Time <15:8>				
		0x0C	Gesture Edge Keep-out	1	This value determines the width of a keep-out barrier around the edge of the active touch area. This helps remove edge-effect issues.	0-255	128
Configuration	0xF0	0x00	SLP <7:0>	4	Duration (in ms) without touch activity before the controller enters Sleep state	0-4,294,967,295	8000
		0x01	SLP <15:8>				
		0x02	SLP <23:16>				
		0x03	SLP <31:24>				
		0x07	Touch Packet CFG	1	Touch Packet Configuration – Enabled: 0x81, Disabled: 0x01	0x81, 0x01	0x81
		0x09	Gesture Packet CFG	1	Gesture Packet Configuration – Enabled: 0x81, Disabled: 0x01	0x81, 0x01	0x01
		0x0A	Status Packet CFG	1	Status Packet Configuration – Enabled: 0x81, Disabled: 0x01	0x81, 0x01	0x01
I/O Status	0xF1	0x02	TX Short Status <7:0>	2	Identifies which TX pins are shorted after using Manufacturing Test command - read only	0x00-0xFF	0x00
		0x03	TX Short Status <15:8>				
		0x06	RX Short Status <7:0>	2	Identifies which RX pins are shorted after using Manufacturing Test command - read only	0x00-0xFF	0x00
		0x07	RX Short Status <15:8>				

© 2012-2014 Microchip Technology Inc.

8.0 SPECIAL FEATURES

8.1 Gestures

Single-finger gestures are a fast and intuitive way to navigate a feature-rich human-machine interface. MTCH6301 supports 11 single finger gestures natively, without requiring interaction from the master processor.

Tuning may be required depending on the layout of the sensor, the time duration and length of activation required for your gesture-supported application. The most common defaults are already preloaded and should serve most applications. These parameters and their descriptions are available in the “Gestures” section of the memory map (see **Section 7.0 “Memory Map”**).

Note:	Gestures are *not* enabled by default, and must be enabled via the gesture packet configuration byte in RAM (see **Section 7.0 “Memory Map”**).

If your application requires *only* gesture functionality, and does *not* require touch coordinates, the touch packet configuration byte (see **Section 7.0 “Memory Map”**) can be used to turn off all touch coordinate data.

TABLE 8-1: GESTURE TYPES

Icon	Gesture Type	Icon	Gesture Type
	Tap (Click)		Tap and Hold
	Double Tap (Double Click)		
	Swipe Down		Swipe Down and Hold
	Swipe Up		Swipe Up and Hold
	Swipe Right		Swipe Right and Hold
	Swipe Left		Swipe Left and Hold

8.2 Sleep

Sleep functionality is enabled by default, and follows the behavior shown in Figure 8-1. This functionality can be modified via the SLP register (see **Section 7.0 "Memory Map"**).

The SLP register is the time (in ms) without touch activity before controller enters Sleep mode.

FIGURE 8-1: SLEEP FUNCTIONALITY

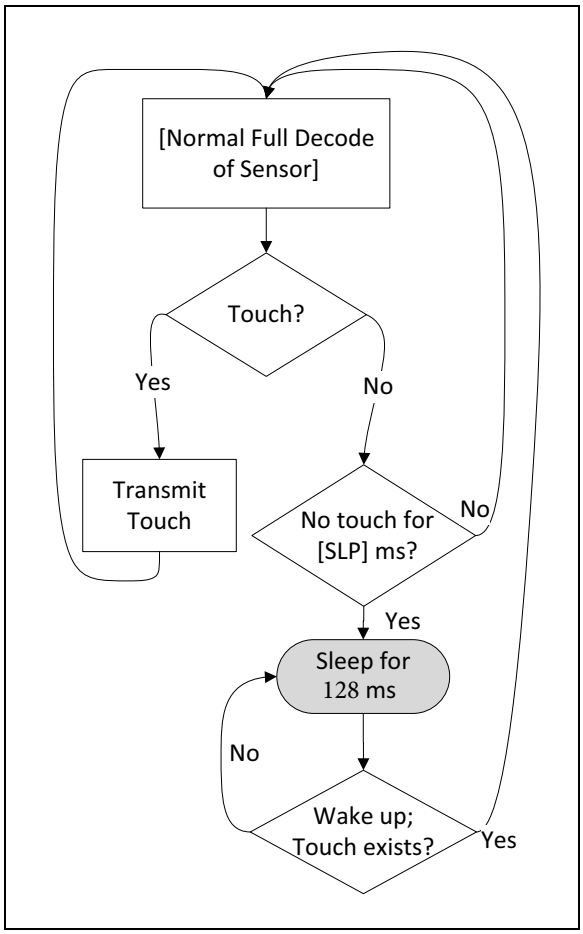

8.3 Nonvolatile RAM (NVRAM)

Permanent storage of parameters that have been modified can be achieved using the internal NVRAM. This NVRAM is *not* meant for continuous writing, as it has a low write-cycle limit of 20,000.

Upon start-up, the NVRAM's data (if present) is loaded into the controller. If no data is available in the NVRAM, the device defaults are loaded instead.

Please note that RAM parameters cannot be individually written to the NVRAM. They are all written with only one command. See the applicable command within the command set for more details. (**Section 6.6 "Full Command Set"**)

© 2012-2014 Microchip Technology Inc.

8.4 Touch Performance

Using default acquisition parameters, Figure 8-2 shows the relationship of single-touch report rate with regard to sensor size.

FIGURE 8-2: REPORT RATE VS SENSOR SIZE

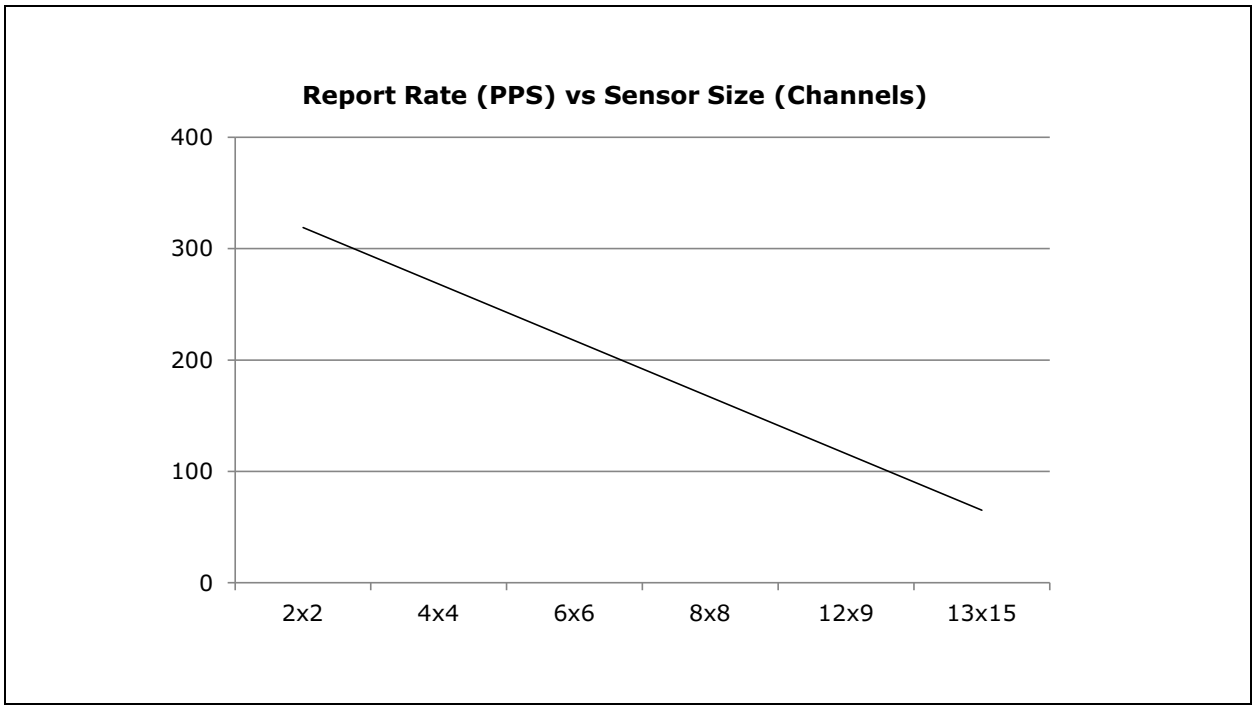

9.0 ELECTRICAL CHARACTERISTICS

This section provides an overview of the MTCH6301 electrical characteristics. Additional information will be provided in future revisions of this document as it becomes available.

9.1 Absolute Maximum Ratings(†)

Ambient temperature under bias ..... -40°C to +85°C
Storage temperature ..... -65°C to +150°C
Voltage on pins with respect to VSS
- on VDD pin ..... -0.3V to +4.0V
- on all other pins ..... 0.3V to (VDD + 0.3V)

Maximum current
- out of VSS pin ..... 300 mA
- into VDD pin(s) ..... 300 mA
- sunk by all ports ..... 200 mA
- sourced by all ports ..... 200 mA

Maximum output current
- sunk by any I/O pin ..... 15 mA
- sourced by any I/O pin ..... 15 mA

Note: This device is sensitive to ESD damage and must be handled appropriately. Failure to properly handle and protect the device in an application may cause partial to complete failure of the device.

† NOTICE: Stresses above those listed under “Absolute Maximum Ratings” may cause permanent damage to the device. This is a stress rating only and functional operation of the device at those or any other conditions above those indicated in the operation listings of this specification is not implied. Exposure above maximum rating conditions for extended periods may affect device reliability.

9.2 Standard Operating Conditions

The standard operating conditions for any device are defined as:

Operating Voltage: $V_{DDMIN} \le V_{DD} \le V_{DDMAX}$
Operating Temperature: $T_{A_MIN} \le T_A \le T_{A_MAX}$

VDD — Operating Supply Voltage(1)

MTCH6301
- VDDMIN ..... +2.4V
- VDDMAX ..... +3.6V

TA — Operating Ambient Temperature Range

Industrial Temperature
- TA_MIN ..... -40°C
- TA_MAX ..... +105°C

Note 1: Maximum current rating requires even load distribution across I/O pins. Maximum current rating may be limited by the device package power dissipation characterizations. See Table 9-1 to calculate device specifications.

© 2012-2014 Microchip Technology Inc.

9.3 DC Characteristics

TABLE 9-1: THERMAL OPERATING CONDITIONS

Symbol	Rating	Min.	Typ.	Max.	Units
T_J	Operating Junction Temperature Range	-40	—	+125	ºC
T_A	Operating Ambient Temperature Range	-40	—	+85	ºC
P_D	Power Dissipation: Internal Chip Power Dissipation: $P_{INT} = V_{DD} \times (I_{DD} - ? I_{OH})$ I/O Pin Power Dissipation: $P_{I/O} = ? ((\{V_{DD} - V_{OH}\} \times I_{OH}) + ? (V_{OL} \times I_{OL}))$	$P_{INT} + P_{I/O}$			W
P_{DMAX}	Maximum Allowed Power Dissipation	$(T_J - T_A)/\theta_{JA}$			W

TABLE 9-2: THERMAL PACKAGING CHARACTERISTICS

Symbol	Characteristics	Typ.	Max.	Units
θJA	Package Thermal Resistance, 44-pin QFN	32	—	ºC/W
θJA	Package Thermal Resistance, 44-pin TQFP	45	—	ºC/W

TABLE 9-3: OPERATING VOLTAGE AND CURRENT

Symbol	Characteristics	Min.	Typ.	Max.	Units	Conditions
V_{DD}	Supply Voltage	2.3	—	3.6	V	—
V_{BOR}	BOR Event on V_{DD} transition high-to-low	2.0	—	2.3	V	—
I_{DD}	Operating Current	—	19	25	mA	**Note 1**
I_{SLP}	Sleep Current	—	200	245	µA	**Note 1, 2**

Note 1: Parameter is characterized, but not tested.

2: Device configured with default parameters.

TABLE 9-4: PIN INPUT AND OUTPUT SPECIFICATIONS

Symbol	Characteristic / Pins	Min.	Max.	Units	Conditions
V_{IL}	**Input Low Voltage**				
	RX, TX	V_{SS}	0.15 V_{DD}	V	—
	SDA, SCL	V_{SS}	0.3 V_{DD}	V	**Note 1**
V_{IH}	**Input High Voltage**				
	RX, TX	0.65 V_{DD}	V_{DD}	V	**Note 1**
	SDA, SCL	0.65 V_{DD}	V_{DD}	V	**Note 1**
V_{OL}	**Output Low Voltage**				
	INT, RX, TX	V_{SS}	0.4	V	$I_{OL} \leq 10$ mA, $V_{DD} = 3.3V$
	SDA, SCL	V_{SS}	0.4	V	$I_{OL} \leq 10$ mA, $V_{DD} = 3.3V$ **(1,2)**
V_{OH}	**Output High Voltage**				
	INT, RX, TX	2.4	V_{DD}	V	$I_{OH} \leq 10$ mA, $V_{DD} = 3.3V$
	SDA, SCL	—	—	V	**Note 2**
V_{BOR}	Brown-out Event on V_{DD} Transition high-to-low	2.0	2.3	V	Min. not tested

Note 1: Parameter is characterized, but not tested.

2: Open drain structure.

9.4 AC Characteristics and Timing Parameters

TABLE 9-5: RESET TIMING

Symbol	Characteristic	Min.	Typ.	Max.	Units	Conditions
TPU	Power-up Period	—	400	—	µs	**Notes 1, 2**
TBOR	Brown-out Pulse Width (Low)	—	1	—	µs	**Note 1**

Note 1: Parameter is characterized, but not tested.

2: Power-up period is for core operation to begin and it does not reflect response time to a touch.

FIGURE 9-1: I²C™ BUS START/STOP BIT TIMING CHARACTERISTICS

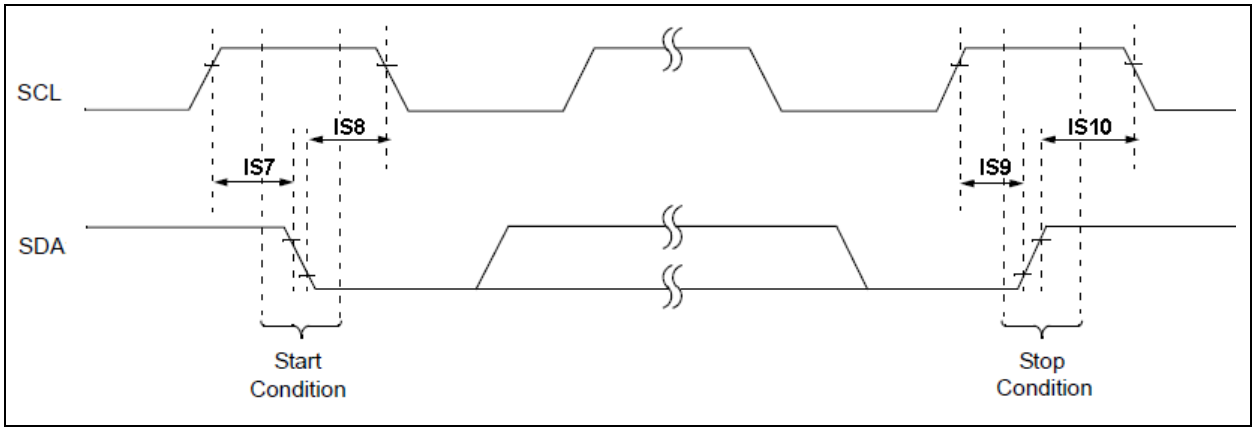

FIGURE 9-2: I²C™ BUS DATA TIMING CHARACTERISTICS

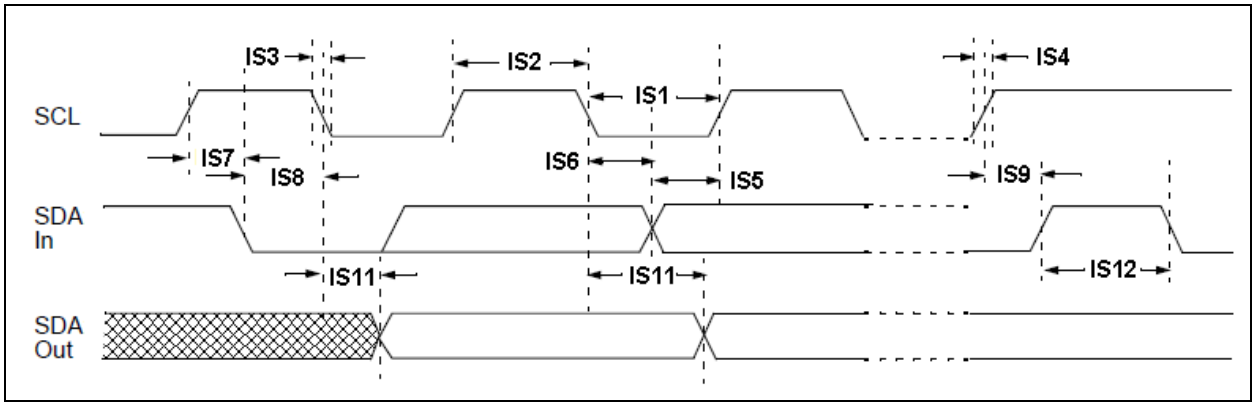

© 2012-2014 Microchip Technology Inc.

TABLE 9-6: I²C™ BUS DATA TIMING REQUIREMENTS

Parameter Number	Symbol	Characteristic		Min.	Max.	Units	Conditions
IS1	TLO:SCL	Clock Low Time	100 kHz mode	4.7	—	µs	—
			400 kHz mode	1.3	—	µs	
IS2	THI:SCL	Clock High Time	100 kHz mode	4.0	—	µs	—
			400 kHz mode	0.6	—	µs	
IS3	TF:SCL	SDA and SCL Fall Time	100 kHz mode	—	300	ns	—
			400 kHz mode	20+0.1 CB	300	ns	
IS4	TR:SCL	SDA and SCL Rise Time	100 kHz mode	—	1000	ns	—
			400 kHz mode	20+0.1 CB	300	ns	
IS5	TSU:DAT	Data Input Setup Time	100 kHz mode	250	—	ns	—
			400 kHz mode	100	—	ns	
IS6	THD:DAT	Data Input Hold Time	100 kHz mode	0	—	ns	—
			400 kHz mode	0	0.9	µs	
IS7	TSU:STA	Start Condition Setup Time	100 kHz mode	4700	—	ns	Only relevant for repeated Start condition
			400 kHz mode	600	—	ns	
IS8	THD:STA	Start Condition Hold Time	100 kHz mode	4000	—	ns	After this period, the first clock pulse is generated
			400 kHz mode	600	—	ns	
IS9	TSU:STO	Stop Condition Setup Time	100 kHz mode	4000	—	ns	—
			400 kHz mode	600	—	ns	
IS10	THD:STO	Stop Condition Hold Time	100 kHz mode	4000	—	ns	—
			400 kHz mode	600	—	ns	
IS11	TAA:SCL	Output Valid from Clock	100 kHz mode	0	3500	ns	—
			400 kHz mode	0	1000	ns	
IS12	TBF:SDA	Bus Free Time	100 kHz mode	4.7	—	µs	Time bus must be free before new transmission can start
			400 kHz mode	1.3	—	µs	
—	CB	SCL, SDC Capacitive Loading		—	400	pF	**Note 1**

Note 1: Parameter is characterized, but not tested.

10.0 ORDERING INFORMATION

TABLE 10-1: ORDERING INFORMATION

Part Number	Pin Package	Packing
MTCH6301-I/PT	44 TQFP 10x10x1mm	Tray
MTCH6301-I/ML	44 QFN 8x8x0.9mm	Tube
MTCH6301T-I/PT	44 TQFP 10x10x1mm	T/R
MTCH6301T-I/ML	44 QFN 8x8x0.9mm	T/R

© 2012-2014 Microchip Technology Inc.

11.0 PACKAGING INFORMATION

11.1 Package Marking Information

44-Lead QFN (8x8x0.9 mm)

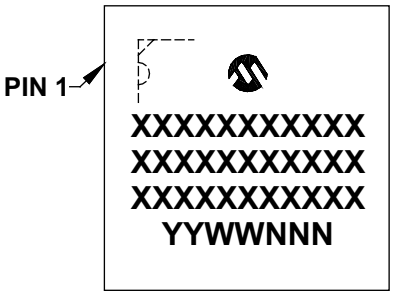

Example

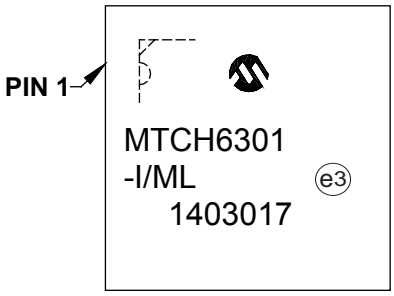

44-Lead TQFP (10x10x1 mm)

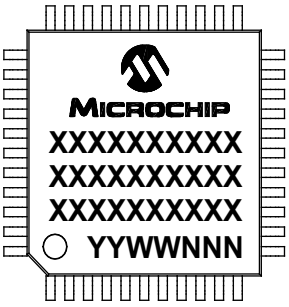

Example

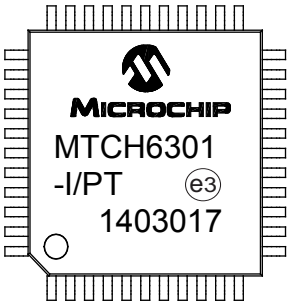

Legend:	XX...X	Customer-specific information
	Y	Year code (last digit of calendar year)
	YY	Year code (last 2 digits of calendar year)
	WW	Week code (week of January 1 is week ‘01’)
	NNN	Alphanumeric traceability code
	(e3)	Pb-free JEDEC® designator for Matte Tin (Sn)
	*	This package is Pb-free. The Pb-free JEDEC designator ((e3)) can be found on the outer packaging for this package.

Note: In the event the full Microchip part number cannot be marked on one line, it will be carried over to the next line, thus limiting the number of available characters for customer-specific information.

11.2 Package Details

44-Lead Plastic Quad Flat, No Lead Package (ML) - 8x8 mm Body [QFN]

Note: For the most current package drawings, please see the Microchip Packaging Specification located at http://www.microchip.com/packaging

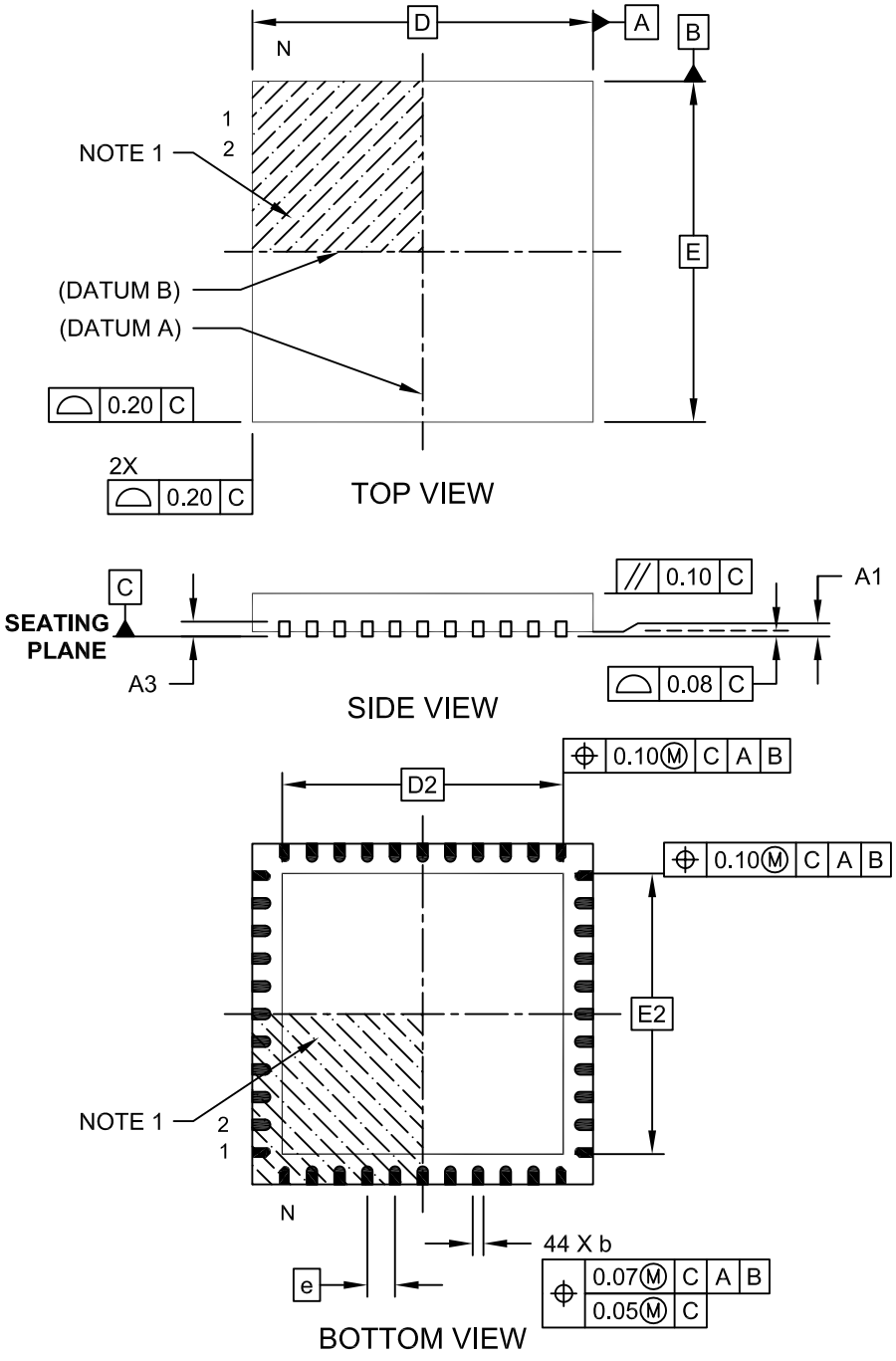

Microchip Technology Drawing C04-103C Sheet 1 of 2

© 2012-2014 Microchip Technology Inc.

44-Lead Plastic Quad Flat, No Lead Package (ML) - 8x8 mm Body [QFN]

Note: For the most current package drawings, please see the Microchip Packaging Specification located at http://www.microchip.com/packaging

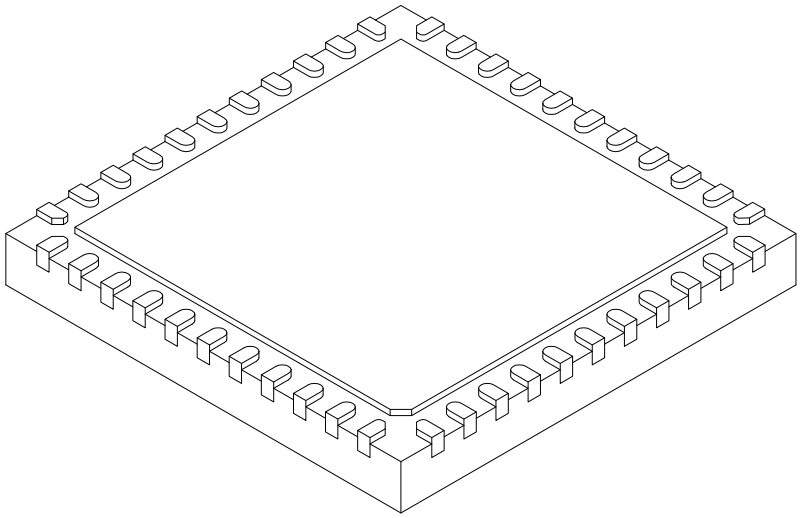

Units		MILLIMETERS		
Dimension Limits		MIN	NOM	MAX
Number of Pins	N		44	
Pitch	e		0.65 BSC	
Overall Height	A	0.80	0.90	1.00
Standoff	A1	0.00	0.02	0.05
Terminal Thickness	A3		0.20 REF	
Overall Width	E		8.00 BSC	
Exposed Pad Width	E2	6.25	6.45	6.60
Overall Length	D		8.00 BSC	
Exposed Pad Length	D2	6.25	6.45	6.60
Terminal Width	b	0.20	0.30	0.35
Terminal Length	L	0.30	0.40	0.50
Terminal-to-Exposed-Pad	K	0.20	-	-

Notes:

1. Pin 1 visual index feature may vary, but must be located within the hatched area.
2. Package is saw singulated
3. Dimensioning and tolerancing per ASME Y14.5M

   BSC: Basic Dimension. Theoretically exact value shown without tolerances.

   REF: Reference Dimension, usually without tolerance, for information purposes only.

Microchip Technology Drawing C04-103C Sheet 2 of 2

44-Lead Plastic Quad Flat, No Lead Package (ML) - 8x8 mm Body [QFN]

Note: For the most current package drawings, please see the Microchip Packaging Specification located at http://www.microchip.com/packaging

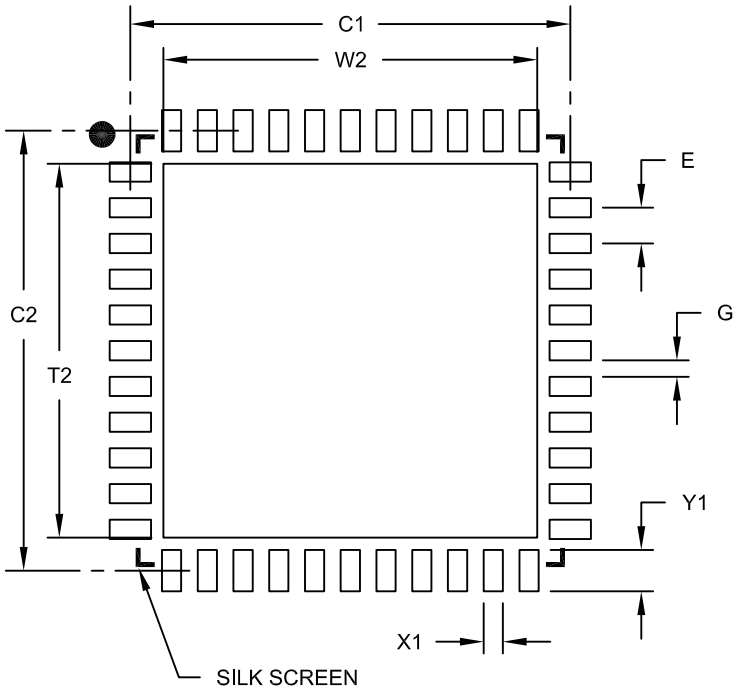

RECOMMENDED LAND PATTERN

Units		MILLIMETERS		
Dimension Limits		MIN	NOM	MAX
Contact Pitch	E		0.65 BSC	
Optional Center Pad Width	W2			6.60
Optional Center Pad Length	T2			6.60
Contact Pad Spacing	C1		8.00	
Contact Pad Spacing	C2		8.00	
Contact Pad Width (X44)	X1			0.35
Contact Pad Length (X44)	Y1			0.85
Distance Between Pads	G	0.25		

Notes:

1. Dimensioning and tolerancing per ASME Y14.5M

BSC: Basic Dimension. Theoretically exact value shown without tolerances.

Microchip Technology Drawing No. C04-2103B

© 2012-2014 Microchip Technology Inc.

44-Lead Plastic Thin Quad Flatpack (PT) – 10x10x1 mm Body, 2.00 mm [TQFP]

Note: For the most current package drawings, please see the Microchip Packaging Specification located at http://www.microchip.com/packaging

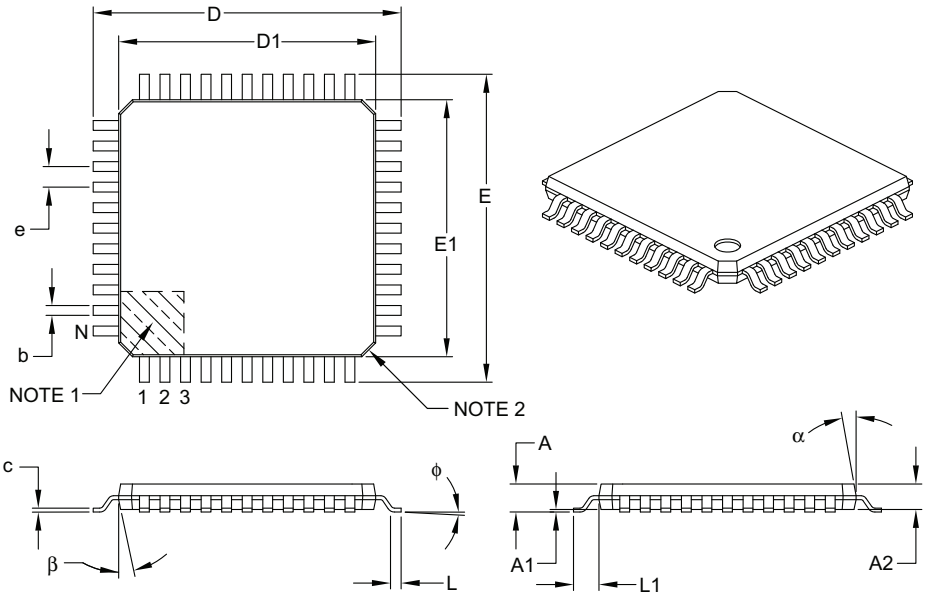

Units		MILLIMETERS		
Dimension Limits		MIN	NOM	MAX
Number of Leads	N		44	
Lead Pitch	e		0.80 BSC	
Overall Height	A	–	–	1.20
Molded Package Thickness	A2	0.95	1.00	1.05
Standoff	A1	0.05	–	0.15
Foot Length	L	0.45	0.60	0.75
Footprint	L1		1.00 REF	
Foot Angle	φ	0°	3.5°	7°
Overall Width	E		12.00 BSC	
Overall Length	D		12.00 BSC	
Molded Package Width	E1		10.00 BSC	
Molded Package Length	D1		10.00 BSC	
Lead Thickness	c	0.09	–	0.20
Lead Width	b	0.30	0.37	0.45
Mold Draft Angle Top	α	11°	12°	13°
Mold Draft Angle Bottom	β	11°	12°	13°

Notes:

1. Pin 1 visual index feature may vary, but must be located within the hatched area.
2. Chamfers at corners are optional; size may vary.
3. Dimensions D1 and E1 do not include mold flash or protrusions. Mold flash or protrusions shall not exceed 0.25 mm per side.
4. Dimensioning and tolerancing per ASME Y14.5M.

BSC: Basic Dimension. Theoretically exact value shown without tolerances.

REF: Reference Dimension, usually without tolerance, for information purposes only.

Microchip Technology Drawing C04-076B

44-Lead Plastic Thin Quad Flatpack (PT) 10X10X1 mm Body, 2.00 mm Footprint [TQFP]

Note: For the most current package drawings, please see the Microchip Packaging Specification located at http://www.microchip.com/packaging

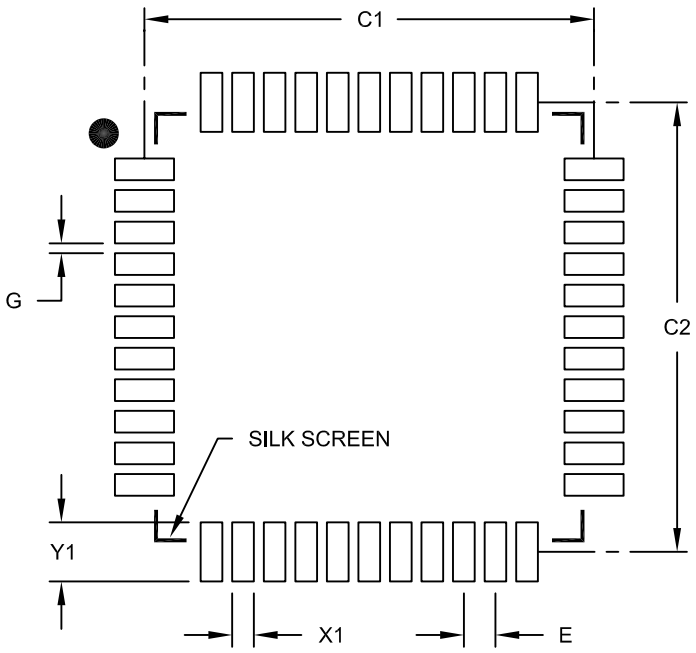

RECOMMENDED LAND PATTERN

Units		MILLIMETERS		
Dimension Limits		MIN	NOM	MAX
Contact Pitch	E		0.80 BSC	
Contact Pad Spacing	C1		11.40	
Contact Pad Spacing	C2		11.40	
Contact Pad Width (X44)	X1			0.55
Contact Pad Length (X44)	Y1			1.50
Distance Between Pads	G	0.25		

Notes:

1. Dimensioning and tolerancing per ASME Y14.5M

BSC: Basic Dimension. Theoretically exact value shown without tolerances.

Microchip Technology Drawing No. C04-2076B

© 2012-2014 Microchip Technology Inc.

APPENDIX A: DATA SHEET REVISION HISTORY

Revision A (2012)

Initial release of the document.

Revision B (03/2014)

Updated the Device Overview page; Added Chapter 4; Updated Chapters 1 through 9 and Chapter 11; Other minor corrections.

THE MICROCHIP WEB SITE

Microchip provides online support via our WWW site at www.microchip.com. This web site is used as a means to make files and information easily available to customers. Accessible by using your favorite Internet browser, the web site contains the following information:

- **Product Support** – Data sheets and errata, application notes and sample programs, design resources, user's guides and hardware support documents, latest software releases and archived software
- **General Technical Support** – Frequently Asked Questions (FAQ), technical support requests, online discussion groups, Microchip consultant program member listing
- **Business of Microchip** – Product selector and ordering guides, latest Microchip press releases, listing of seminars and events, listings of Microchip sales offices, distributors and factory representatives

CUSTOMER CHANGE NOTIFICATION SERVICE

Microchip's customer notification service helps keep customers current on Microchip products. Subscribers will receive e-mail notification whenever there are changes, updates, revisions or errata related to a specified product family or development tool of interest.

To register, access the Microchip web site at www.microchip.com. Under "Support", click on "Customer Change Notification" and follow the registration instructions.

CUSTOMER SUPPORT

Users of Microchip products can receive assistance through several channels:

- Distributor or Representative
- Local Sales Office
- Field Application Engineer (FAE)
- Technical Support

Customers should contact their distributor, representative or Field Application Engineer (FAE) for support. Local sales offices are also available to help customers. A listing of sales offices and locations is included in the back of this document.

Technical support is available through the web site at: http://microchip.com/support

© 2012-2014 Microchip Technology Inc.

Note the following details of the code protection feature on Microchip devices:

- Microchip products meet the specification contained in their particular Microchip Data Sheet.
- Microchip believes that its family of products is one of the most secure families of its kind on the market today, when used in the intended manner and under normal conditions.
- There are dishonest and possibly illegal methods used to breach the code protection feature. All of these methods, to our knowledge, require using the Microchip products in a manner outside the operating specifications contained in Microchip's Data Sheets. Most likely, the person doing so is engaged in theft of intellectual property.
- Microchip is willing to work with the customer who is concerned about the integrity of their code.
- Neither Microchip nor any other semiconductor manufacturer can guarantee the security of their code. Code protection does not mean that we are guaranteeing the product as "unbreakable."

Code protection is constantly evolving. We at Microchip are committed to continuously improving the code protection features of our products. Attempts to break Microchip's code protection feature may be a violation of the Digital Millennium Copyright Act. If such acts allow unauthorized access to your software or other copyrighted work, you may have a right to sue for relief under that Act.

Information contained in this publication regarding device applications and the like is provided only for your convenience and may be superseded by updates. It is your responsibility to ensure that your application meets with your specifications. MICROCHIP MAKES NO REPRESENTATIONS OR WARRANTIES OF ANY KIND WHETHER EXPRESS OR IMPLIED, WRITTEN OR ORAL, STATUTORY OR OTHERWISE, RELATED TO THE INFORMATION, INCLUDING BUT NOT LIMITED TO ITS CONDITION, QUALITY, PERFORMANCE, MERCHANTABILITY OR FITNESS FOR PURPOSE**.** Microchip disclaims all liability arising from this information and its use. Use of Microchip devices in life support and/or safety applications is entirely at the buyer's risk, and the buyer agrees to defend, indemnify and hold harmless Microchip from any and all damages, claims, suits, or expenses resulting from such use. No licenses are conveyed, implicitly or otherwise, under any Microchip intellectual property rights.

Trademarks

The Microchip name and logo, the Microchip logo, dsPIC, FlashFlex, KEELOQ, KEELOQ logo, MPLAB, PIC, PICmicro, PICSTART, PIC^{32} logo, rfPIC, SST, SST Logo, SuperFlash and UNI/O are registered trademarks of Microchip Technology Incorporated in the U.S.A. and other countries.

FilterLab, Hampshire, HI-TECH C, Linear Active Thermistor, MTP, SEEVAL and The Embedded Control Solutions Company are registered trademarks of Microchip Technology Incorporated in the U.S.A.

Silicon Storage Technology is a registered trademark of Microchip Technology Inc. in other countries.

Analog-for-the-Digital Age, Application Maestro, BodyCom, chipKIT, chipKIT logo, CodeGuard, dsPICDEM, dsPICDEM.net, dsPICworks, dsSPEAK, ECAN, ECONOMONITOR, FanSense, HI-TIDE, In-Circuit Serial Programming, ICSP, Mindi, MiWi, MPASM, MPF, MPLAB Certified logo, MPLIB, MPLINK, mTouch, Omniscient Code Generation, PICC, PICC-18, PICDEM, PICDEM.net, PICkit, PICtail, REAL ICE, rfLAB, Select Mode, SQI, Serial Quad I/O, Total Endurance, TSHARC, UniWinDriver, WiperLock, ZENA and Z-Scale are trademarks of Microchip Technology Incorporated in the U.S.A. and other countries.

SQTP is a service mark of Microchip Technology Incorporated in the U.S.A.

GestIC and ULPP are registered trademarks of Microchip Technology Germany II GmbH & Co. KG, a subsidiary of Microchip Technology Inc., in other countries.

All other trademarks mentioned herein are property of their respective companies.

© 2013, Microchip Technology Incorporated, Printed in the U.S.A., All Rights Reserved.

Printed on recycled paper.

ISBN: 978-1-63276-011-1

QUALITY MANAGEMENT SYSTEM
CERTIFIED BY DNV
ISO/TS 16949

Microchip received ISO/TS-16949:2009 certification for its worldwide headquarters, design and wafer fabrication facilities in Chandler and Tempe, Arizona; Gresham, Oregon and design centers in California and India. The Company's quality system processes and procedures are for its PIC® MCUs and dsPIC® DSCs, KEELOQ® code hopping devices, Serial EEPROMs, microperipherals, nonvolatile memory and analog products. In addition, Microchip's quality system for the design and manufacture of development systems is ISO 9001:2000 certified.

Worldwide Sales and Service

AMERICAS

Corporate Office
2355 West Chandler Blvd.
Chandler, AZ 85224-6199
Tel: 480-792-7200
Fax: 480-792-7277
Technical Support:
http://www.microchip.com/support
Web Address:
www.microchip.com

Atlanta
Duluth, GA
Tel: 678-957-9614
Fax: 678-957-1455

Austin, TX
Tel: 512-257-3370

Boston
Westborough, MA
Tel: 774-760-0087
Fax: 774-760-0088

Chicago
Itasca, IL
Tel: 630-285-0071
Fax: 630-285-0075

Cleveland
Independence, OH
Tel: 216-447-0464
Fax: 216-447-0643

Dallas
Addison, TX
Tel: 972-818-7423
Fax: 972-818-2924

Detroit
Novi, MI
Tel: 248-848-4000

Houston, TX
Tel: 281-894-5983

Indianapolis
Noblesville, IN
Tel: 317-773-8323
Fax: 317-773-5453

Los Angeles
Mission Viejo, CA
Tel: 949-462-9523
Fax: 949-462-9608

New York, NY
Tel: 631-435-6000

San Jose, CA
Tel: 408-735-9110

Canada - Toronto
Tel: 905-673-0699
Fax: 905-673-6509

ASIA/PACIFIC

Asia Pacific Office
Suites 3707-14, 37th Floor
Tower 6, The Gateway
Harbour City, Kowloon
Hong Kong
Tel: 852-2401-1200
Fax: 852-2401-3431

Australia - Sydney
Tel: 61-2-9868-6733
Fax: 61-2-9868-6755

China - Beijing
Tel: 86-10-8569-7000
Fax: 86-10-8528-2104

China - Chengdu
Tel: 86-28-8665-5511
Fax: 86-28-8665-7889

China - Chongqing
Tel: 86-23-8980-9588
Fax: 86-23-8980-9500

China - Hangzhou
Tel: 86-571-8792-8115
Fax: 86-571-8792-8116

China - Hong Kong SAR
Tel: 852-2943-5100
Fax: 852-2401-3431

China - Nanjing
Tel: 86-25-8473-2460
Fax: 86-25-8473-2470

China - Qingdao
Tel: 86-532-8502-7355
Fax: 86-532-8502-7205

China - Shanghai
Tel: 86-21-5407-5533
Fax: 86-21-5407-5066

China - Shenyang
Tel: 86-24-2334-2829
Fax: 86-24-2334-2393

China - Shenzhen
Tel: 86-755-8864-2200
Fax: 86-755-8203-1760

China - Wuhan
Tel: 86-27-5980-5300
Fax: 86-27-5980-5118

China - Xian
Tel: 86-29-8833-7252
Fax: 86-29-8833-7256

China - Xiamen
Tel: 86-592-2388138
Fax: 86-592-2388130

China - Zhuhai
Tel: 86-756-3210040
Fax: 86-756-3210049

ASIA/PACIFIC

India - Bangalore
Tel: 91-80-3090-4444
Fax: 91-80-3090-4123

India - New Delhi
Tel: 91-11-4160-8631
Fax: 91-11-4160-8632

India - Pune
Tel: 91-20-3019-1500

Japan - Osaka
Tel: 81-6-6152-7160
Fax: 81-6-6152-9310

Japan - Tokyo
Tel: 81-3-6880- 3770
Fax: 81-3-6880-3771

Korea - Daegu
Tel: 82-53-744-4301
Fax: 82-53-744-4302

Korea - Seoul
Tel: 82-2-554-7200
Fax: 82-2-558-5932 or
82-2-558-5934

Malaysia - Kuala Lumpur
Tel: 60-3-6201-9857
Fax: 60-3-6201-9859

Malaysia - Penang
Tel: 60-4-227-8870
Fax: 60-4-227-4068

Philippines - Manila
Tel: 63-2-634-9065
Fax: 63-2-634-9069

Singapore
Tel: 65-6334-8870
Fax: 65-6334-8850

Taiwan - Hsin Chu
Tel: 886-3-5778-366
Fax: 886-3-5770-955

Taiwan - Kaohsiung
Tel: 886-7-213-7830

Taiwan - Taipei
Tel: 886-2-2508-8600
Fax: 886-2-2508-0102

Thailand - Bangkok
Tel: 66-2-694-1351
Fax: 66-2-694-1350

EUROPE

Austria - Wels
Tel: 43-7242-2244-39
Fax: 43-7242-2244-393

Denmark - Copenhagen
Tel: 45-4450-2828
Fax: 45-4485-2829

France - Paris
Tel: 33-1-69-53-63-20
Fax: 33-1-69-30-90-79

Germany - Dusseldorf
Tel: 49-2129-3766400

Germany - Munich
Tel: 49-89-627-144-0
Fax: 49-89-627-144-44

Germany - Pforzheim
Tel: 49-7231-424750

Italy - Milan
Tel: 39-0331-742611
Fax: 39-0331-466781

Italy - Venice
Tel: 39-049-7625286

Netherlands - Drunen
Tel: 31-416-690399
Fax: 31-416-690340

Poland - Warsaw
Tel: 48-22-3325737

Spain - Madrid
Tel: 34-91-708-08-90
Fax: 34-91-708-08-91

Sweden - Stockholm
Tel: 46-8-5090-4654

UK - Wokingham
Tel: 44-118-921-5800
Fax: 44-118-921-5820

03/13/14

© 2012-2014 Microchip Technology Inc.