MTCH101

Single-Channel Proximity Detector

Features:

- Capacitive Proximity Detection System:
  - High Signal to Noise Ratio (SNR)
  - Adjustable sensitivity
  - Noise rejection filters
  - Automatic Environmental Compensation
  - Wide range of sensor shape and size support
  - Stuck Release Mechanism
- No External Components
- Low-Power mode
- Response Time Down to 75 ms
- Wide Operative Voltage:
  - 2.0V to 5.5V
- Operating Temperature:
  - -40°C to +85°C

Applications:

- Light Switch
- Portable Device Enabler
- White Goods and Appliances
- Office Equipment and Toys
- Display and Keypad Backlighting Activation
- SAR Compliant Application

Package Type

The device is available in 6-lead SOT-23 packaging (see Figure 1).

FIGURE 1: 6-PIN DIAGRAM

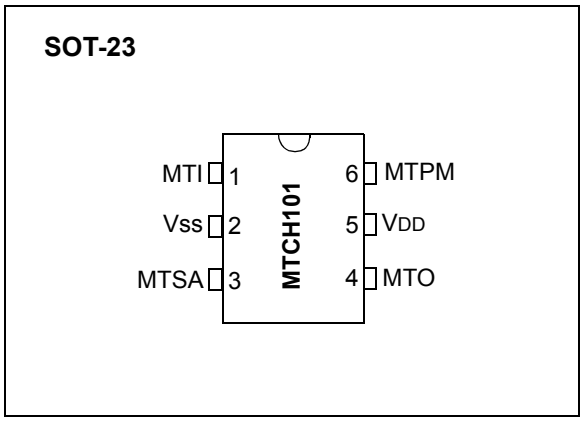

TABLE 1: 6-PIN SOT-23 PINOUT DESCRIPTION

I/O	6-Pin SOT-23	Description
MTI	1	Proximity Sensor Input
VSS	2	Ground
MTSA	3	Sensitivity Adjust Input
MTO	4	Detect Output (Active-Low)
VDD	5	Power Supply Input
MTPM	6	Low-Power mode Select (Active-Low)

Table of Contents

1.0 Device Overview 3
2.0 Typical Circuit 4
3.0 Sensitivity Adjustment 5
4.0 Power Mode 6
5.0 Reset 7
6.0 Interface with the Host 8
7.0 Detection Distance 9
8.0 Electrical Characteristics 10
9.0 Packaging Information 12
Index 16
The Microchip Web Site 17
Customer Change Notification Service 17
Customer Support 17
Product Identification System 18

TO OUR VALUED CUSTOMERS

It is our intention to provide our valued customers with the best documentation possible to ensure successful use of your Microchip products. To this end, we will continue to improve our publications to better suit your needs. Our publications will be refined and enhanced as new volumes and updates are introduced.

If you have any questions or comments regarding this publication, please contact the Marketing Communications Department via E-mail at **docerrors@microchip.com**. We welcome your feedback.

Most Current Data Sheet

To obtain the most up-to-date version of this data sheet, please register at our Worldwide Web site at:

http://www.microchip.com

You can determine the version of a data sheet by examining its literature number found on the bottom outside corner of any page. The last character of the literature number is the version number, (e.g., DS30000000A is version A of document DS30000000).

Errata

An errata sheet, describing minor operational differences from the data sheet and recommended workarounds, may exist for current devices. As device/documentation issues become known to us, we will publish an errata sheet. The errata will specify the revision of silicon and revision of document to which it applies.

To determine if an errata sheet exists for a particular device, please check with one of the following:

- Microchip's Worldwide Web site; **http://www.microchip.com**
- Your local Microchip sales office (see last page)

When contacting a sales office, please specify which device, revision of silicon and data sheet (include literature number) you are using.

Customer Notification System

Register on our web site at **www.microchip.com** to receive the most current information on all of our products.

 © 2012-2013 Microchip Technology Inc.

1.0 DEVICE OVERVIEW

The MTCH101 provides an easy way to add proximity or touch detection to any human interface application.

The device integrates a single-channel capacitive proximity detection, which can work through plastic, glass or wood-front panel. It also supports a wide range of conductive materials as sensor, like copper pad on PCB, silver or carbon printing on plastic, Indium Tin Oxide (ITO) pad, wire/cable, etc. On-board adjustable sensitivity and power mode selection allow the user to configure the device at run time easily. An active-low output will communicate the state of the sensor to a host/master MCU, or drive an indication LED (see Figure 1-1).

FIGURE 1-1: BLOCK DIAGRAM

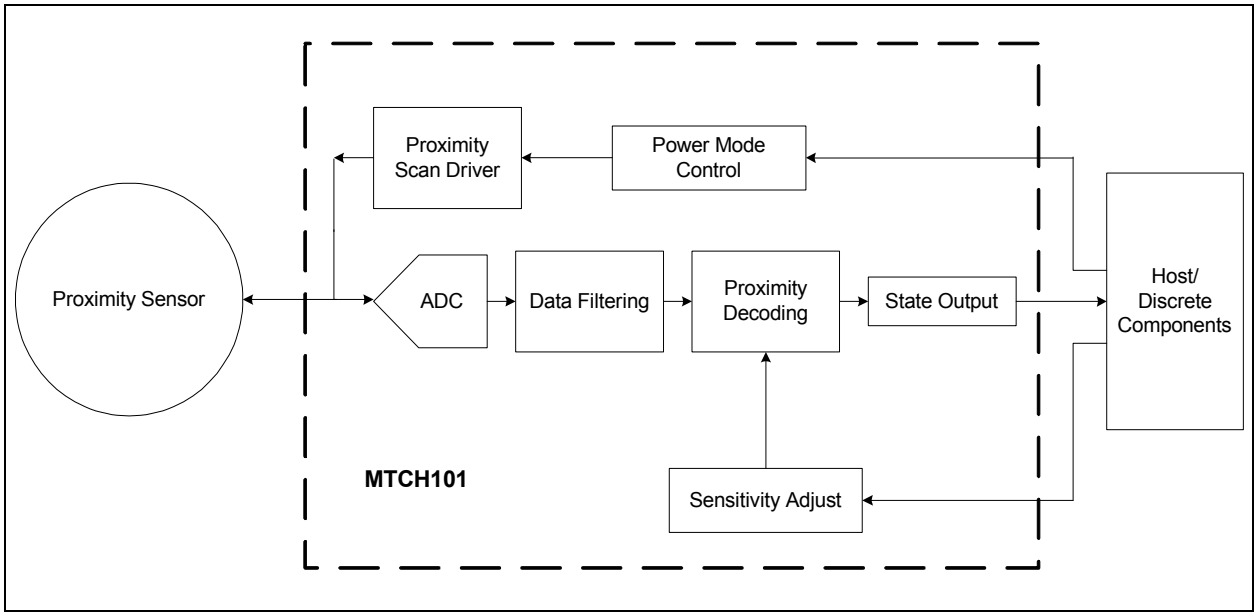

2.0 TYPICAL CIRCUIT

The MTCH101 can work either as a stand-alone device to control a LED (see Figure 2-1) to indicate touch/ proximity, or work with host MCU (see Figure 2-2).

FIGURE 2-1: TYPICAL CIRCUIT AS STAND-ALONE

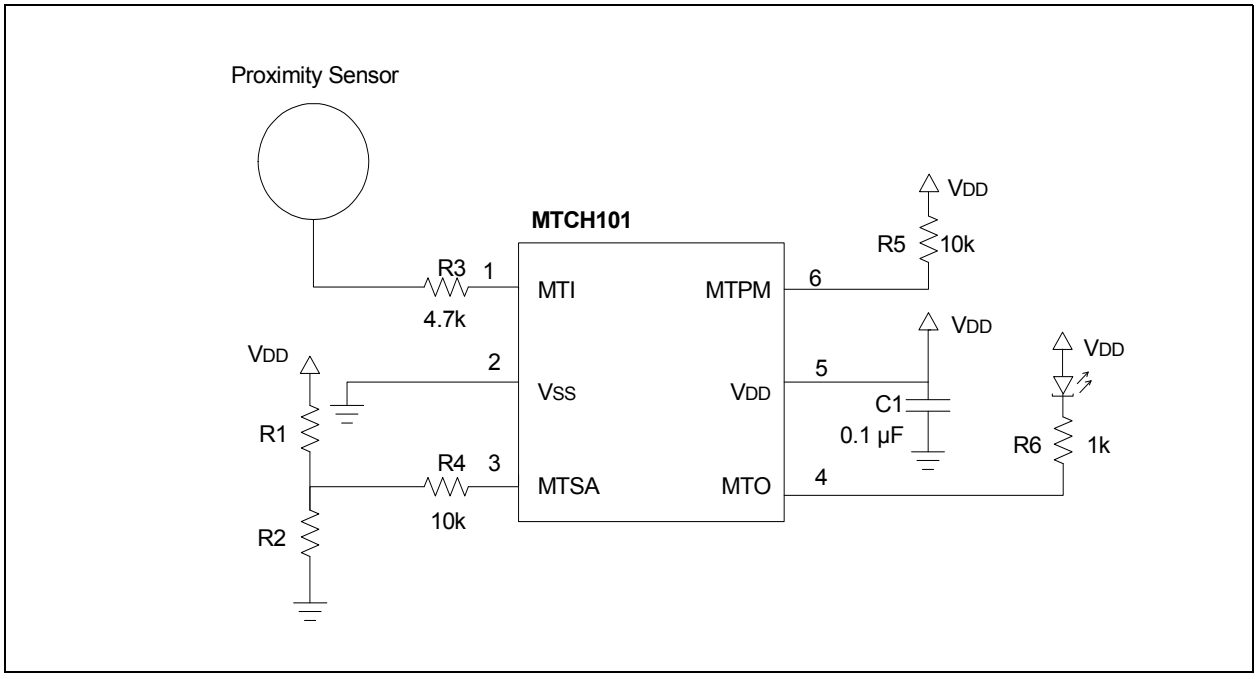

FIGURE 2-2: TYPICAL CIRCUIT WITH HOST MCU

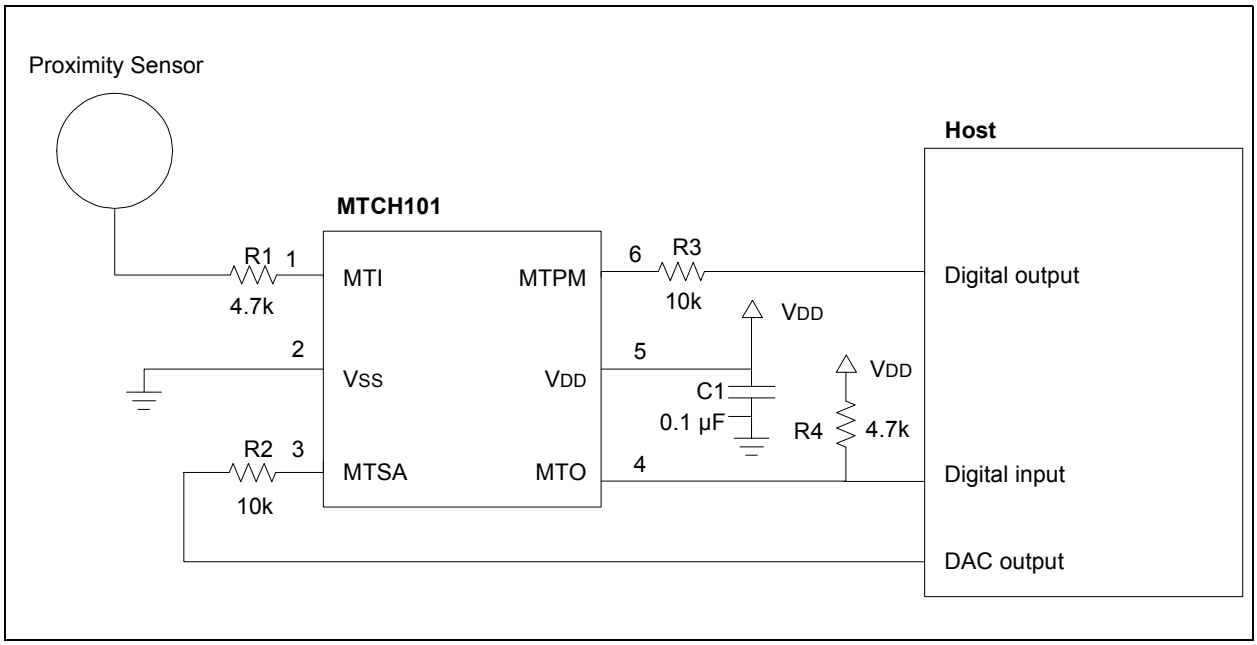

 © 2012-2013 Microchip Technology Inc.

3.0 SENSITIVITY ADJUSTMENT

The sensitivity of the system determines how far and fast it can respond to proximity or touch. The MTCH101 provides the MTSA pin to adjust the sensitivity, and the voltage on this pin will determine the sensitivity. VDD voltage will give the lowest sensitivity, while GND voltage will give the highest sensitivity.

The device will sample the voltage on the MTSA pin after each scan, so it does not only support setting a fixed sensitivity by a resistor ladder, but it also allows adjusting the sensitivity dynamically, while the device is running. A Digital-to-Analog Converter (DAC) controlled by the host, or a hardware potentiometer can be used to adjust the sensitivity. See typical circuit in Figure 3-1 to Figure 3-4.

FIGURE 3-1: FIXED SENSITIVITY USING RESISTOR LADDER

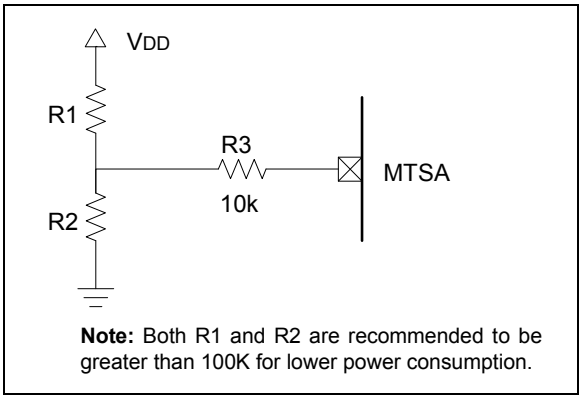

Note: Both R1 and R2 are recommended to be greater than 100K for lower power consumption.

FIGURE 3-2: HARDWARE SENSITIVITY ADJUST USING POTENTIOMETER

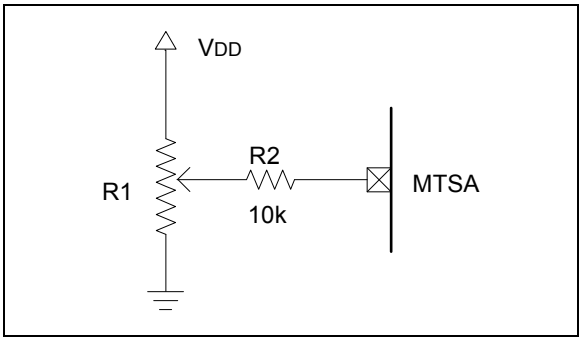

FIGURE 3-3: SENSITIVITY CONTROLLED BY HOST USING DAC

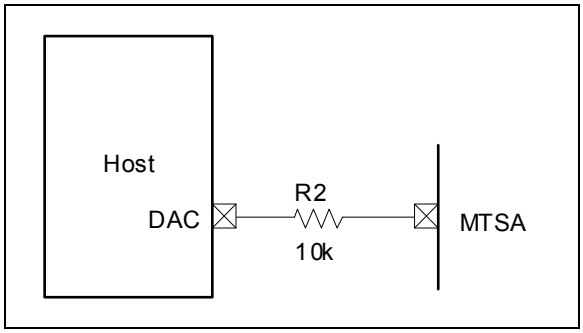

FIGURE 3-4: SENSITIVITY CONTROLLED BY HOST USING PWM

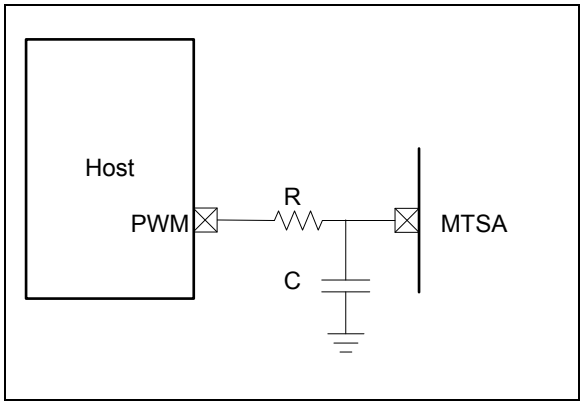

Note 1: Application Note AN538, *"Using PWM to Generate Analog Output"* has details about how to choose appropriate R and C values.

4.0 POWER MODE

The MTCH101 has two power mode options: Normal mode and Low-Power mode. The state of the MTPM pin determines the power mode.

4.1 Normal Mode Option

The device will run in Normal mode if the MTPM pin is set high and no proximity or touch is detected. In this mode, after an active scan, sleep time is between 69 and 105 ms, as shown in Figure 4-1. The sleep time depends on the VDD voltage, the lower the voltage, the more time it will be in the Idle state.

FIGURE 4-1: NORMAL MODE

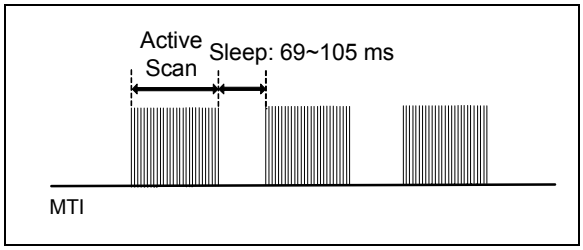

4.2 Low-Power Mode Option

The device will run in Low-Power mode if the MTPM pin is set low and no proximity or touch is detected. In this mode, after an active scan, sleep time is between 572 and 845 ms, as shown in Figure 4-2. As in Normal mode, the sleep time depends on the VDD voltage, the lower the voltage, the more time it will be in the Idle state.

FIGURE 4-2: LOW-POWER MODE

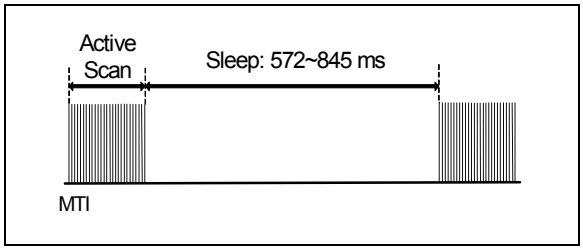

Note:	If the device makes a proximity or touch detection, it will automatically perform active scans continually. Once the device releases from its proximity-detected state, it will return to the power mode set by the MTPM pin.

 © 2012-2013 Microchip Technology Inc.

5.0 RESET

The MTCH101 can be stuck in a proximity-detected state in some cases, such as sudden temperature change, or higher dielectric materials (metal, wood or glass) present near the sensor. Two methods can be used to release the proximity-detected state without repowering the device.

5.1 Reset by the MTPM pin

Changing the state of the MTPM pin, either from low-to-high or from high-to-low, will reset the proximity detection system and release the detection state. If the device needs to keep the same power mode, then a pulse, which holds at least 4.5 ms, can be used to reset the device (see Figure 5-1). This reset method can be used at anytime during the operation, not only when the state is stuck in a proximity-detected state.

FIGURE 5-1: RESET PULSE DURATION REQUIREMENT

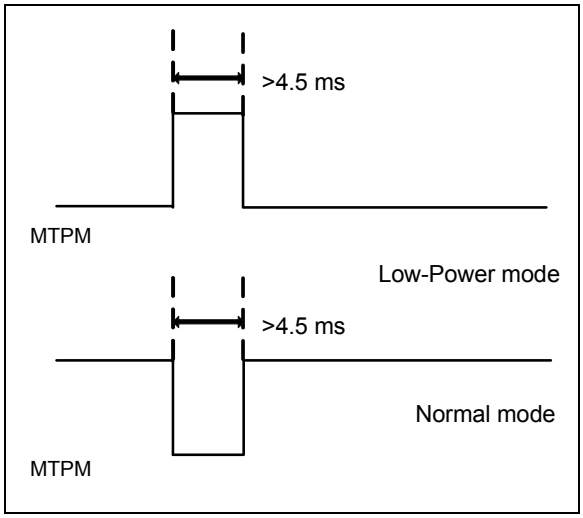

Note: In non-detected state, because the device goes to Sleep for a certain time, the Reset pulse duration should be 4.5 ms plus the Sleep time.

5.2 Reset by Touch and Release

A stuck release mechanism is implemented for this device. When the device is stuck in a proximity-detected state, the user can touch the sensor pad and then release. This action will release the proximity-detected state (see Figure 5-2).

FIGURE 5-2: RESET BY TOUCH AND RELEASE

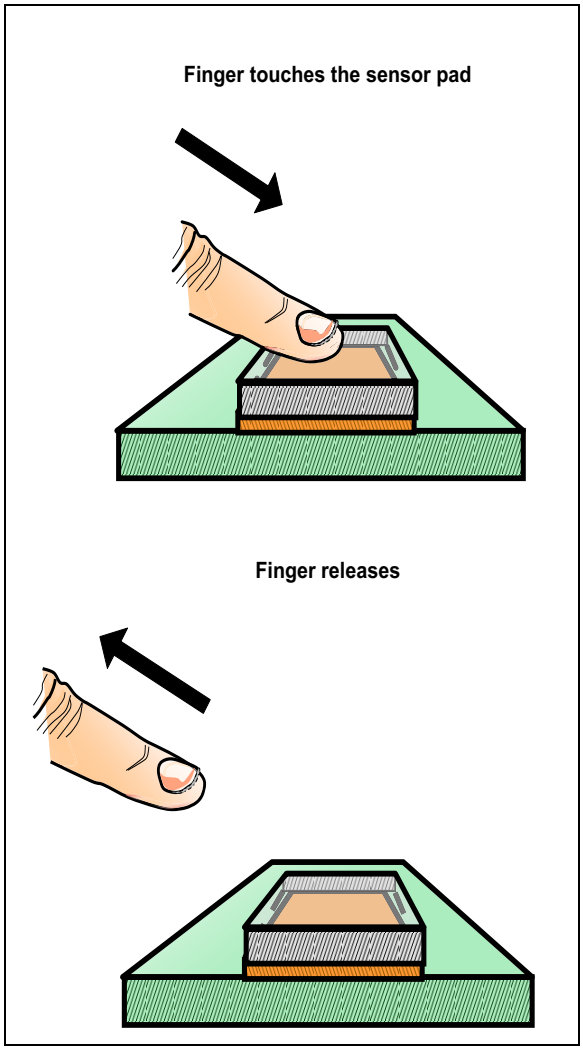

6.0 INTERFACE WITH THE HOST

The MTO pin can be considered as an open drain output. A pull-up resistor (usually 3.3k~10 kΩ) is needed to interface with a host. The pull-up voltage can be any voltage lower than VDD. This allows a simple interface with a lower VDD host device (see Figure 6-1).

FIGURE 6-1: INTERFACE WITH THE HOST

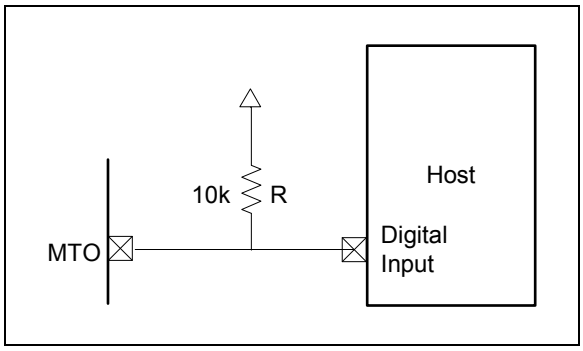

 © 2012-2013 Microchip Technology Inc.

7.0 DETECTION DISTANCE

FIGURE 7-1: DISTANCE vs. SENSOR AREA

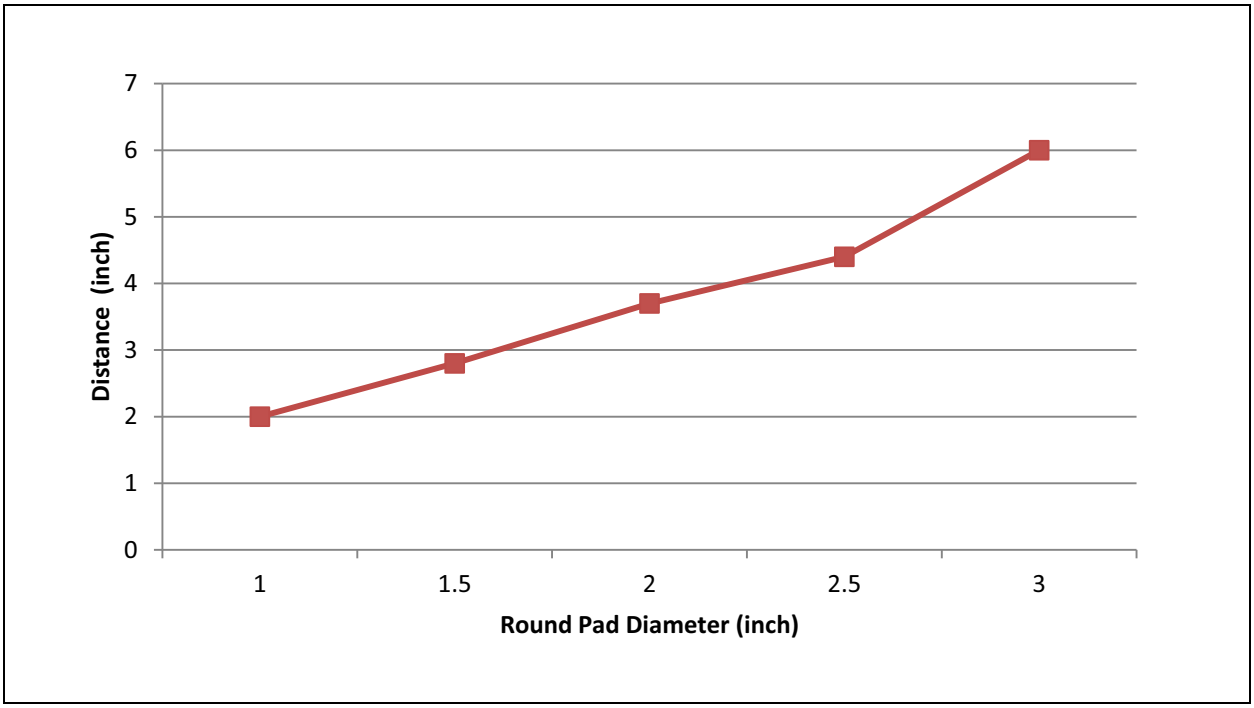

Note:	The tested sensors are round solid pads on FR4 PCB. No ground plane was near the sensor, as this would give the maximum detection distance.

8.0 ELECTRICAL CHARACTERISTICS

8.1 Absolute Maximum Ratings(†)

Ambient temperature under bias ..... -40°C to +125°C

Storage temperature ..... -65°C to +150°C

Voltage on pins with respect to V_{SS}

- on V_{DD} pin ..... 0 to +6.5V
- on all other pins ..... -0.3V to (V_{DD} + 0.3V)

Max. current

- out of V_{SS} pin ..... 80 mA
- into V_{DD} pin ..... 80 mA

Input clamp current, I_{IK} (V_I < 0 or V_I > V_{DD}) ..... ±20 mA

Output clamp current, I_{OK} (V_O < 0 or V_O > V_{DD}) ..... ±20 mA

Max. output current

- sunk by any I/O pin ..... 25 mA
- sourced by any I/O pin ..... 25 mA

†NOTICE: Stresses above those listed under “Absolute Maximum Ratings” may cause permanent damage to the device. This is a stress rating only and functional operation of the device at those or any other conditions above those indicated in the operation listings of this specification is not implied. Exposure to maximum rating conditions for extended periods may affect device reliability.

8.2 Standard Operating Conditions

The standard operating conditions for any device are defined as:

Operating Voltage: $V_{DDMIN} \le V_{DD} \le V_{DDMAX}$
Operating Temperature: $T_{A_MIN} \le T_A \le T_{A_MAX}$

V_{DD} — Operating Supply Voltage(1)

- V_{DDMIN} ..... +2.0V
- V_{DDMAX} ..... +5.5V

T_A — Operating Ambient Temperature Range

Industrial Temperature

- T_{A_MIN} ..... -40°C
- T_{A_MAX} ..... +85°C

Note 1: See Parameter D001 in Table 8-1.

 © 2012-2013 Microchip Technology Inc.

Note: The tables provided following this note are a statistical summary based on a limited number of samples and are provided for informational purposes only. The performance characteristics listed herein are not tested or guaranteed. In some tables, the data presented may be outside the specified operating range (e.g., outside specified power supply range) and therefore, outside the warranted range.

8.3 DC Characteristics

TABLE 8-1: MTCH101 (INDUSTRIAL)

DC CHARACTERISTICS			Standard Operating Conditions (unless otherwise specified)				
Param No.	**Sym.**	**Characteristic**	**Min.**	**Typ†**	**Max.**	**Units**	**Conditions**
D001	VDD	**Supply Voltage**	2.0	—	5.5	V	
D002	VPOR	**VDD Start Voltage** to ensure Power-on-Reset	—	Vss	—	V	
D003	SVDD	**VDD Rise Rate** to ensure Power-on Reset	0.05*	—	—	V/ms	

* These parameters are characterized but not tested.

† Data in "Typ" column is at 3.0V, 25°C unless otherwise stated. These parameters are for design guidance only and are not tested.

TABLE 8-2: RESPONSE TIME AND CURRENT CONSUMPTION

Power Mode	Typical Current (µA)	Highest Sensitivity Response Time (ms)		Lowest Sensitivity Response Time (ms)		Conditions
		Typical	Max.	Typical	Max.	
Normal mode	120	100	150	210	260	VDD = 2.0V
Low-Power mode	30	790	890	900	1000	
Normal mode	200	80	130	190	240	VDD = 3.3V
Low-Power mode	54	640	740	750	850	
Normal mode	340	76	119	190	220	VDD = 5.0V
Low-Power mode	97	530	620	640	730	

9.0 PACKAGING INFORMATION

9.1 Package Marking Information

6-Lead SOT-23

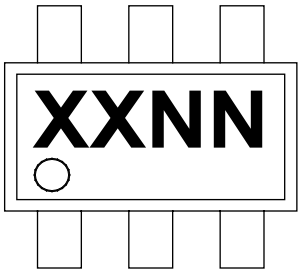

Example

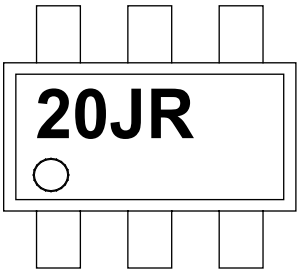

Legend:	XX...X	Customer-specific information
	Y	Year code (last digit of calendar year)
	YY	Year code (last 2 digits of calendar year)
	WW	Week code (week of January 1 is week ‘01’)
	NNN	Alphanumeric traceability code
	(e3)	Pb-free JEDEC designator for Matte Tin (Sn)
	*	This package is Pb-free. The Pb-free JEDEC designator ((e3)) can be found on the outer packaging for this package.

Note: In the event the full Microchip part number cannot be marked on one line, it will be carried over to the next line, thus limiting the number of available characters for customer-specific information.

***** Standard PIC® device marking consists of Microchip part number, year code, week code, and traceability code. For PIC device marking beyond this, certain price adders apply. Please check with your Microchip Sales Office. For QTP devices, any special marking adders are included in QTP price.

 © 2012-2013 Microchip Technology Inc.

9.2 Package Details

The following sections give the technical details of the packages.

6-Lead Plastic Small Outline Transistor (OT) [SOT-23]

Note: For the most current package drawings, please see the Microchip Packaging Specification located at http://www.microchip.com/packaging

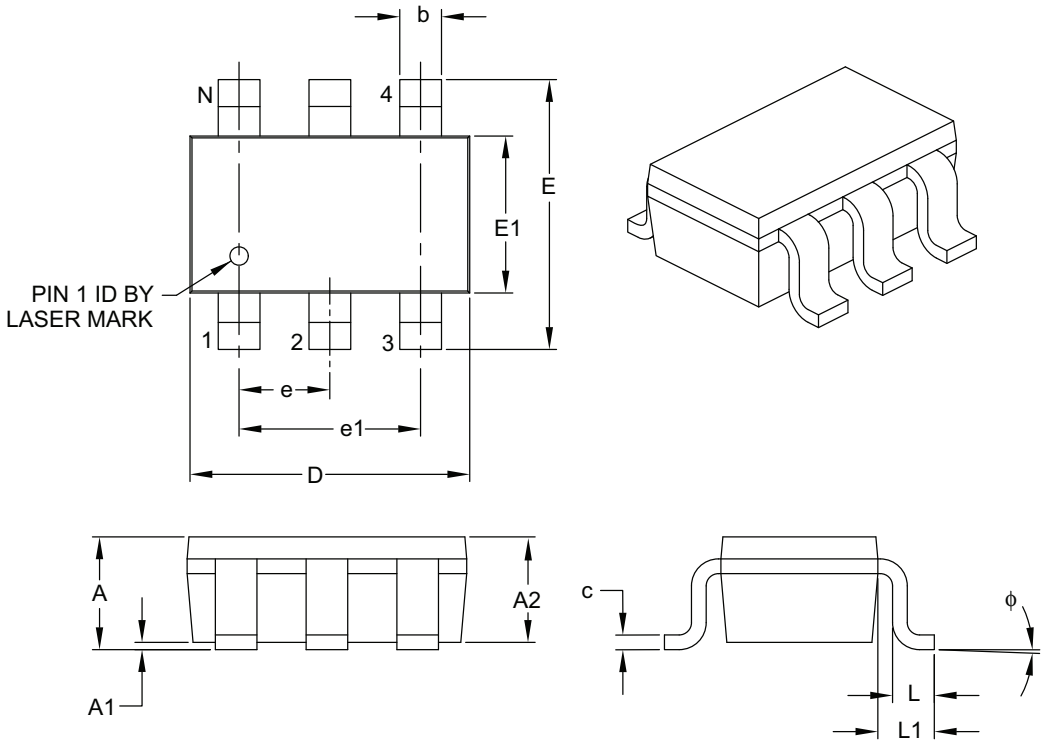

Units		MILLIMETERS		
Dimension Limits		MIN	NOM	MAX
Number of Pins	N		6	
Pitch	e		0.95 BSC	
Outside Lead Pitch	e1		1.90 BSC	
Overall Height	A	0.90	–	1.45
Molded Package Thickness	A2	0.89	–	1.30
Standoff	A1	0.00	–	0.15
Overall Width	E	2.20	–	3.20
Molded Package Width	E1	1.30	–	1.80
Overall Length	D	2.70	–	3.10
Foot Length	L	0.10	–	0.60
Footprint	L1	0.35	–	0.80
Foot Angle	ϕ	0°	–	30°
Lead Thickness	c	0.08	–	0.26
Lead Width	b	0.20	–	0.51

Notes:

1. Dimensions D and E1 do not include mold flash or protrusions. Mold flash or protrusions shall not exceed 0.127 mm per side.
2. Dimensioning and tolerancing per ASME Y14.5M.

BSC: Basic Dimension. Theoretically exact value shown without tolerances.

Microchip Technology Drawing C04-028B

6-Lead Plastic Small Outline Transistor (OT) [SOT-23]

Note: For the most current package drawings, please see the Microchip Packaging Specification located at http://www.microchip.com/packaging

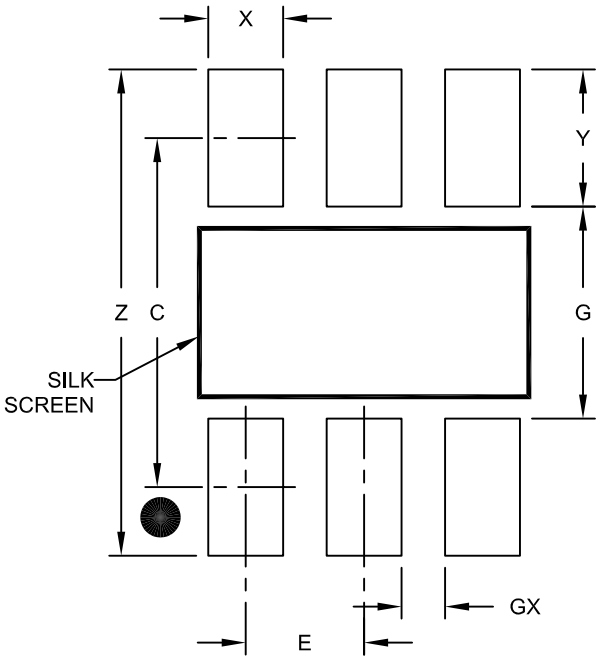

RECOMMENDED LAND PATTERN

Units		MILLIMETERS		
Dimension Limits		MIN	NOM	MAX
Contact Pitch	E		0.95 BSC	
Contact Pad Spacing	C		2.80	
Contact Pad Width (X6)	X			0.60
Contact Pad Length (X6)	Y			1.10
Distance Between Pads	G	1.70		
Distance Between Pads	GX	0.35		
Overall Width	Z			3.90

Notes:

1. Dimensioning and tolerancing per ASME Y14.5M

BSC: Basic Dimension. Theoretically exact value shown without tolerances.

Microchip Technology Drawing No. C04-2028A

 © 2012-2013 Microchip Technology Inc.

APPENDIX A: DATA SHEET REVISION HISTORY

Revision A (10/2012)

Initial release of this data sheet.

Revision B (7/2013)

Updated Figures 2-1 and 2-2; Updated the Electrical Characteristics section to new format; Other minor corrections.

INDEX

A

Absolute Maximum Ratings 10
Applications 1

B

Block Diagram 3

C

Customer Change Notification Service 17
Customer Notification Service 17
Customer Support 17

D

DC Characteristics
    MTCH101 (Industrial) 11
Detection Distance 9
Device Overview 3
Distance vs. Sensor Area 9

E

Electrical Characteristics 10
Errata 2

F

Features 1
Fixed Sensitivity using Resistor Ladder 5

H

Hardware Sensitivity Adjust using Potentiometer 5

I

Interface with the Host 8
Internet Address 17

L

Low-Power Mode 6
Low-Power Mode Option 6

M

Microchip Internet Web Site 17

N

Normal Mode 6
Normal Mode Option 6

P

Package Type 1
Packaging
    SOT-23 13
Packaging Information 12
Power Mode 6

R

Reset 7
Reset by the MTPM pin 7
Reset by Touch and Release 7
Reset Pulse Duration Requirement 7
Revision History 15

S

Sensitivity Adjustment 5
Sensitivity Controlled by Host using DAC 5
Sensitivity Controlled by Host using PWM 5

T

Typical Circuit 4
Typical Circuit as Standalone 4
Typical Circuit with Host MCU 4

W

WWW Address 17
WWW, On-Line Support 2

 © 2012-2013 Microchip Technology Inc.

THE MICROCHIP WEB SITE

Microchip provides online support via our WWW site at www.microchip.com. This web site is used as a means to make files and information easily available to customers. Accessible by using your favorite Internet browser, the web site contains the following information:

- **Product Support** – Data sheets and errata, application notes and sample programs, design resources, user's guides and hardware support documents, latest software releases and archived software
- **General Technical Support** – Frequently Asked Questions (FAQ), technical support requests, online discussion groups, Microchip consultant program member listing
- **Business of Microchip** – Product selector and ordering guides, latest Microchip press releases, listing of seminars and events, listings of Microchip sales offices, distributors and factory representatives

CUSTOMER CHANGE NOTIFICATION SERVICE

Microchip's customer notification service helps keep customers current on Microchip products. Subscribers will receive e-mail notification whenever there are changes, updates, revisions or errata related to a specified product family or development tool of interest.

To register, access the Microchip web site at www.microchip.com. Under "Support", click on "Customer Change Notification" and follow the registration instructions.

CUSTOMER SUPPORT

Users of Microchip products can receive assistance through several channels:

- Distributor or Representative
- Local Sales Office
- Field Application Engineer (FAE)
- Technical Support

Customers should contact their distributor, representative or Field Application Engineer (FAE) for support. Local sales offices are also available to help customers. A listing of sales offices and locations is included in the back of this document.

Technical support is available through the web site at: http://microchip.com/support

PRODUCT IDENTIFICATION SYSTEM

To order or obtain information, e.g., on pricing or delivery, refer to the factory or the listed sales office.

PART NO.	[X](1)	-	X	/XX	XXX
Device	Tape and Reel Option		Temperature Range	Package	Pattern

Device:	MTCH101	
Tape and Reel Option:	Blank T	= Standard packaging (tube or tray) = Tape and Reel(1)
Temperature Range:	I	= -40°C to +85°C (Industrial)
Package:(2)	OT	= 6-pin SOT-23
Pattern:	QTP, SQTP, Code or Special Requirements (blank otherwise)	

Examples:

a) MTCH101 - I/OT
Industrial temperature
SOT-23 package

Note 1: Tape and Reel identifier only appears in the catalog part number description. This identifier is used for ordering purposes and is not printed on the device package. Check with your Microchip Sales Office for package availability with the Tape and Reel option.

2: For other small form-factor package availability and marking information, please visit www.microchip.com/packaging or contact your local sales office.

© 2012-2013 Microchip Technology Inc.

Note the following details of the code protection feature on Microchip devices:

- Microchip products meet the specification contained in their particular Microchip Data Sheet.
- Microchip believes that its family of products is one of the most secure families of its kind on the market today, when used in the intended manner and under normal conditions.
- There are dishonest and possibly illegal methods used to breach the code protection feature. All of these methods, to our knowledge, require using the Microchip products in a manner outside the operating specifications contained in Microchip's Data Sheets. Most likely, the person doing so is engaged in theft of intellectual property.
- Microchip is willing to work with the customer who is concerned about the integrity of their code.
- Neither Microchip nor any other semiconductor manufacturer can guarantee the security of their code. Code protection does not mean that we are guaranteeing the product as "unbreakable."

Code protection is constantly evolving. We at Microchip are committed to continuously improving the code protection features of our products. Attempts to break Microchip's code protection feature may be a violation of the Digital Millennium Copyright Act. If such acts allow unauthorized access to your software or other copyrighted work, you may have a right to sue for relief under that Act.

Information contained in this publication regarding device applications and the like is provided only for your convenience and may be superseded by updates. It is your responsibility to ensure that your application meets with your specifications. MICROCHIP MAKES NO REPRESENTATIONS OR WARRANTIES OF ANY KIND WHETHER EXPRESS OR IMPLIED, WRITTEN OR ORAL, STATUTORY OR OTHERWISE, RELATED TO THE INFORMATION, INCLUDING BUT NOT LIMITED TO ITS CONDITION, QUALITY, PERFORMANCE, MERCHANTABILITY OR FITNESS FOR PURPOSE**.** Microchip disclaims all liability arising from this information and its use. Use of Microchip devices in life support and/or safety applications is entirely at the buyer's risk, and the buyer agrees to defend, indemnify and hold harmless Microchip from any and all damages, claims, suits, or expenses resulting from such use. No licenses are conveyed, implicitly or otherwise, under any Microchip intellectual property rights.

Trademarks

The Microchip name and logo, the Microchip logo, dsPIC, FlashFlex, KEELOQ, KEELOQ logo, MPLAB, PIC, PICmicro, PICSTART, PIC^{32} logo, rfPIC, SST, SST Logo, SuperFlash and UNI/O are registered trademarks of Microchip Technology Incorporated in the U.S.A. and other countries.

FilterLab, Hampshire, HI-TECH C, Linear Active Thermistor, MTP, SEEVAL and The Embedded Control Solutions Company are registered trademarks of Microchip Technology Incorporated in the U.S.A.

Silicon Storage Technology is a registered trademark of Microchip Technology Inc. in other countries.

Analog-for-the-Digital Age, Application Maestro, BodyCom, chipKIT, chipKIT logo, CodeGuard, dsPICDEM, dsPICDEM.net, dsPICworks, dsSPEAK, ECAN, ECONOMONITOR, FanSense, HI-TIDE, In-Circuit Serial Programming, ICSP, Mindi, MiWi, MPASM, MPF, MPLAB Certified logo, MPLIB, MPLINK, mTouch, Omniscient Code Generation, PICC, PICC-18, PICDEM, PICDEM.net, PICkit, PICtail, REAL ICE, rfLAB, Select Mode, SQI, Serial Quad I/O, Total Endurance, TSHARC, UniWinDriver, WiperLock, ZENA and Z-Scale are trademarks of Microchip Technology Incorporated in the U.S.A. and other countries.

SQTP is a service mark of Microchip Technology Incorporated in the U.S.A.

GestIC and ULPP are registered trademarks of Microchip Technology Germany II GmbH & Co. KG, a subsidiary of Microchip Technology Inc., in other countries.

All other trademarks mentioned herein are property of their respective companies.

© 2012-2013, Microchip Technology Incorporated, Printed in the U.S.A., All Rights Reserved.

Printed on recycled paper.

ISBN: 9781620773345

QUALITY MANAGEMENT SYSTEM
CERTIFIED BY DNV
═ ISO/TS 16949 ═

Microchip received ISO/TS-16949:2009 certification for its worldwide headquarters, design and wafer fabrication facilities in Chandler and Tempe, Arizona; Gresham, Oregon and design centers in California and India. The Company's quality system processes and procedures are for its PIC® MCUs and dsPIC® DSCs, KEELOQ® code hopping devices, Serial EEPROMs, microperipherals, nonvolatile memory and analog products. In addition, Microchip's quality system for the design and manufacture of development systems is ISO 9001:2000 certified.

Worldwide Sales and Service

AMERICAS

Corporate Office
2355 West Chandler Blvd.
Chandler, AZ 85224-6199
Tel: 480-792-7200
Fax: 480-792-7277
Technical Support:
http://www.microchip.com/support
Web Address:
www.microchip.com

Atlanta
Duluth, GA
Tel: 678-957-9614
Fax: 678-957-1455

Boston
Westborough, MA
Tel: 774-760-0087
Fax: 774-760-0088

Chicago
Itasca, IL
Tel: 630-285-0071
Fax: 630-285-0075

Cleveland
Independence, OH
Tel: 216-447-0464
Fax: 216-447-0643

Dallas
Addison, TX
Tel: 972-818-7423
Fax: 972-818-2924

Detroit
Farmington Hills, MI
Tel: 248-538-2250
Fax: 248-538-2260

Indianapolis
Noblesville, IN
Tel: 317-773-8323
Fax: 317-773-5453

Los Angeles
Mission Viejo, CA
Tel: 949-462-9523
Fax: 949-462-9608

Santa Clara
Santa Clara, CA
Tel: 408-961-6444
Fax: 408-961-6445

Toronto
Mississauga, Ontario,
Canada
Tel: 905-673-0699
Fax: 905-673-6509

ASIA/PACIFIC

Asia Pacific Office
Suites 3707-14, 37th Floor
Tower 6, The Gateway
Harbour City, Kowloon
Hong Kong
Tel: 852-2401-1200
Fax: 852-2401-3431

Australia - Sydney
Tel: 61-2-9868-6733
Fax: 61-2-9868-6755

China - Beijing
Tel: 86-10-8569-7000
Fax: 86-10-8528-2104

China - Chengdu
Tel: 86-28-8665-5511
Fax: 86-28-8665-7889

China - Chongqing
Tel: 86-23-8980-9588
Fax: 86-23-8980-9500

China - Hangzhou
Tel: 86-571-2819-3187
Fax: 86-571-2819-3189

China - Hong Kong SAR
Tel: 852-2943-5100
Fax: 852-2401-3431

China - Nanjing
Tel: 86-25-8473-2460
Fax: 86-25-8473-2470

China - Qingdao
Tel: 86-532-8502-7355
Fax: 86-532-8502-7205

China - Shanghai
Tel: 86-21-5407-5533
Fax: 86-21-5407-5066

China - Shenyang
Tel: 86-24-2334-2829
Fax: 86-24-2334-2393

China - Shenzhen
Tel: 86-755-8864-2200
Fax: 86-755-8203-1760

China - Wuhan
Tel: 86-27-5980-5300
Fax: 86-27-5980-5118

China - Xian
Tel: 86-29-8833-7252
Fax: 86-29-8833-7256

China - Xiamen
Tel: 86-592-2388138
Fax: 86-592-2388130

China - Zhuhai
Tel: 86-756-3210040
Fax: 86-756-3210049

ASIA/PACIFIC

India - Bangalore
Tel: 91-80-3090-4444
Fax: 91-80-3090-4123

India - New Delhi
Tel: 91-11-4160-8631
Fax: 91-11-4160-8632

India - Pune
Tel: 91-20-2566-1512
Fax: 91-20-2566-1513

Japan - Osaka
Tel: 81-6-6152-7160
Fax: 81-6-6152-9310

Japan - Tokyo
Tel: 81-3-6880- 3770
Fax: 81-3-6880-3771

Korea - Daegu
Tel: 82-53-744-4301
Fax: 82-53-744-4302

Korea - Seoul
Tel: 82-2-554-7200
Fax: 82-2-558-5932 or
82-2-558-5934

Malaysia - Kuala Lumpur
Tel: 60-3-6201-9857
Fax: 60-3-6201-9859

Malaysia - Penang
Tel: 60-4-227-8870
Fax: 60-4-227-4068

Philippines - Manila
Tel: 63-2-634-9065
Fax: 63-2-634-9069

Singapore
Tel: 65-6334-8870
Fax: 65-6334-8850

Taiwan - Hsin Chu
Tel: 886-3-5778-366
Fax: 886-3-5770-955

Taiwan - Kaohsiung
Tel: 886-7-213-7828
Fax: 886-7-330-9305

Taiwan - Taipei
Tel: 886-2-2508-8600
Fax: 886-2-2508-0102

Thailand - Bangkok
Tel: 66-2-694-1351
Fax: 66-2-694-1350

EUROPE

Austria - Wels
Tel: 43-7242-2244-39
Fax: 43-7242-2244-393

Denmark - Copenhagen
Tel: 45-4450-2828
Fax: 45-4485-2829

France - Paris
Tel: 33-1-69-53-63-20
Fax: 33-1-69-30-90-79

Germany - Munich
Tel: 49-89-627-144-0
Fax: 49-89-627-144-44

Italy - Milan
Tel: 39-0331-742611
Fax: 39-0331-466781

Netherlands - Drunen
Tel: 31-416-690399
Fax: 31-416-690340

Spain - Madrid
Tel: 34-91-708-08-90
Fax: 34-91-708-08-91

UK - Wokingham
Tel: 44-118-921-5869
Fax: 44-118-921-5820

11/29/12

 © 2012-2013 Microchip Technology Inc.