MTC30 SERIES 30 Watts

KEY FEATURES

- Switching Power Module for PCB Mountable
- Fully Encapsulated Plastic Case
- Universal Input Range 90-264VAC
- Regulated Output and Low Ripple and Noise
- <0.15W No Load Input Power
- Isolation Class II
- CE, CB, UL, cUL Approval
- 3-Year Product Warranty



E308218

ELECTRICAL SPECIFICATIONS

All specifications valid at normal input voltage, full load and +25°C after warm-up time unless otherwise stated.

Model No. (Single Output)		MTC30-5S	MTC30-12S	MTC30-15S	MTC30-24S
Max Output Wattage (W)		25W	30W	30W	30W
Input	Voltage	90-264 VAC or 120-370 VDC			
	Frequency (Hz)	47-440 Hz			
	Current (Full load)	650 mA max. (115 VAC) / 400 mA max. (230 VAC)			
	Inrush current (<2ms,Cold Start)	30 A max. (115 VAC) / 60 A max. (230 VAC)			
	Leakage Current	< 0.1mA / 264 VAC (Touch Current)			
	No Load Input Power (<240 VAC)	<0.15W			
	External Fuse (recommend)	3.15 A slow blow type			
Output	Voltage (V.DC.)	5V	12V	15V	24V
	Voltage Accuracy	±2%			
	Current (mA) max	5000	2500	2000	1250
	Line Regulation (LL-HL) (typ.)	±0.5%			
	Load Regulation (10-100%) (typ.)	±1%			
	Maximum Capacitive Load (at 230 VAC)	6800uF	1600uF	1200uF	470uF
	Ripple & Noise (max.) (Note 1)	100mVp-p	150mVp-p	150mVp-p	240mVp-p
	Efficiency (at 230 VAC)	84%	89%	86%	86%
	Hold-up Time	10 ms min.			
Protection	Over Power Protection	Hiccup technique, auto-recovery			
	Over Voltage Protection	Zener diode clamp			
	Short Circuit Protection	Hiccup mode, indefinite (automatic recovery)			
Isolation	Input-Output (V.AC)	4000V			
Environment	Operating Temperature	-40°C…+80°C (with derating)			
	Storage Temperature	-40°C…+90°C			
	Max Case Operating Temperature	84°C			
	Temperature Coefficient	±0.05%/°C			
	Altitude During Operation	5000m			
	Humidity	up to 95% RH			
	MTBF	>250,000 h @ 25°C (MIL-HDBK-217F)			
	Atmospheric Pressure	70 kPa to 106 kPa			
Physical	Dimension (L x W x H)	2.52 x 1.8 x 0.93 Inches (64.1 x 45.6 x 23.5 mm) Tolerance ±0.5 mm			
	Case Material	Plastic resin (flammability to UL 94V-0)			
	Weight	135 g			
	Cooling Method	Free air convection			

ELECTRICAL SPECIFICATIONS

All specifications valid at normal input voltage, full load and +25°C after warm-up time unless otherwise stated.

Model No. (Single Output)		MTC30-5S	MTC30-12S	MTC30-15S	MTC30-24S
Safety	Approval	cUL / UL Standard: UL 60950-1, CAN/CSA C22.2 No. 60950-1-07 ANSI/AAMI ES60601-1 (2005 + C1:09 + A2:10), CAN/CSA-C22.2 No. 60601-1 (2008), 2 x MOPP CB Standard: IEC 60950-1:2005 (2nd Edition) + Am 1:2009 + Am 2:2013 IEC 60601-1:2005 (3rd Edition) + CORR. 1 (2006) + CORR. 2 (2007) + AM1 (2012) or IEC 60601-1 (2012 reprint), 2 x MOPP			
EMC	Conducted and radiated EMI	EN55011 class B (Radiation Class A for MTC30 A2 Series)			
	EMS	EN60601-1-2 4th edition			

NOTE

1. Ripple & Noise are measured at 20MHz of bandwidth with 0.1uF & 47uF parallel capacitor.
2. Safety approvals cover frequency 47-63 Hz.
3. That “natural convection” is about 20LFM but is not equal to still air (0 LFM).
4. It's recommended to add Varistor 14S471K at L / N input side in parallel.
5. Please refer to our PDF file "AC-DC Application" on our website: www.archcorp.com.tw

MECHANICAL DIMENSION (Top View)

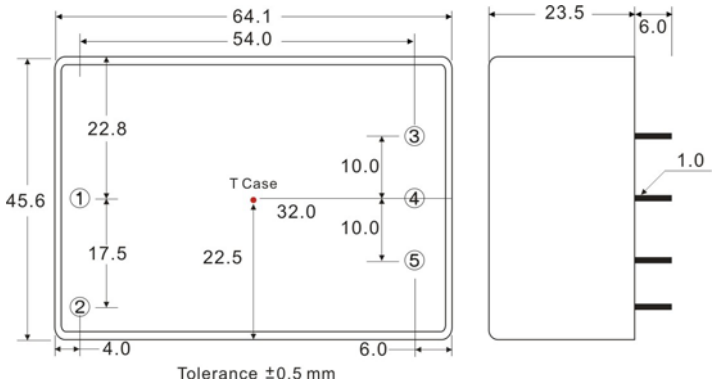

PIN#	Single
1	AC IN (N)
2	AC IN (L)
3	-DC OUT
4	NO PIN
5	+DC OUT

BLOCK DIAGRAM

Single Output

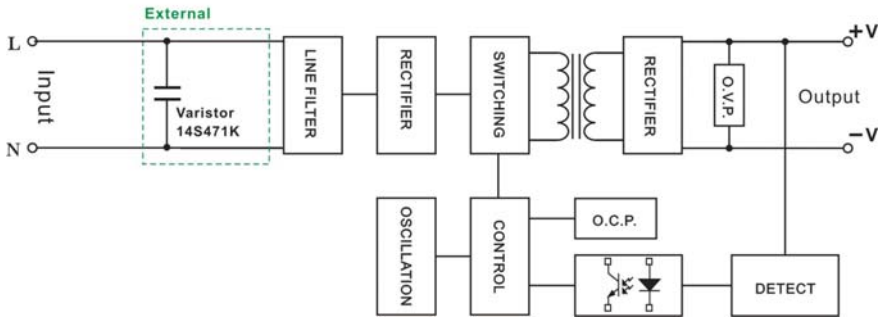

DERATING

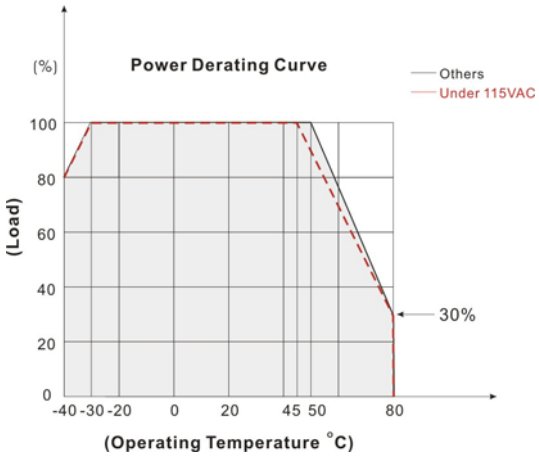

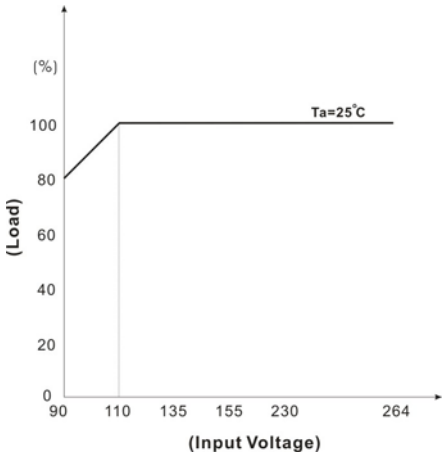

SCREW TERMINAL

MTC30-A2



PIN#	Single
1	AC IN (N)
2	NO CONNECT
3	AC IN (L)
4	NO CONNECT
5	-DC OUT
6	NO CONNECT
7	+DC OUT
8	NO CONNECT

