MTC-6015-2R

15" Fanless Multi-Touch Computer with 6th Generation Intel® Core™ i7/i5/Celeron® SoC, 2 GigE LAN, 2 SSD Tray, 2 SIM Socket, 5 USB 3.0, 16 Isolated DIO



Features

- 15" FT LCD panel with LED backlight
- Projected Capacitive Multi-touch Screen with 7H anti-scratch surface, up to 10-point Multi-touch
- Fanless, Intel® Core™ i7-6600U/i5-6300U/Celeron® 3955U Processor (Skylake-U)
- 2 Independent GigE LAN
- 2 Mini PCIe for WiFi/4G/3G/LTE/GPRS/UMTS
- 16 Isolated DIO, 2 SSD Tray, 5 USB 3.0, 4 COM
- 6V to 36V DC-in, 80V Surge Protection, Ignition Power Control
- Touchscreen works with gloves
- IP65 Front Panel Protection

Specifications

Panel	
Panel Type	TFT LCD
Active Area	15" (4 : 3)
Max. Resolution	1280 x 1024
Display Color	16.7M (RGB 8-bit)
Backlight	LED Backlight
Brightness (cd/m^2)	250
Viewing Angle (H/V)	80/80/70/70
Contrast Ratio	600 : 1
Touch Screen	
Touch Screen Type	10-point Projected Capacitive
Transparency	≧ 91%
Surface Hardness	7H Surface Hardness
Control Interface	USB Interface
System	
Processor	Intel® Core™ i7/i5/Celeron® Processor (Skylake-U)
Chipset	Intel® SoC
Memory	2 DDR4 2133MHz SO-DIMMs, up to 32GB
Graphics	Intel® HD Graphics 520
Ethernet	▪ Intel® I219 Gigabit LAN ▪ Intel® I210 Gigabit LAN
Audio	Realtek ALC892, 5.1 Channel HD Audio
I/O Interface	
Serial	4 COM RS-232/422/485
USB	5 USB 3.0
DIO	16 Isolated DIO : 8 DI, 8 DO
LAN	2 GigE LAN
Audio	1 Mic-in, 1 Line-out
Display	▪ DVI-D : Up to 1920 x 1200 @ 60Hz ▪ DisplayPort : Up to 4096 x 2304 @ 60Hz
LED	Power, HDD
CFast	1 CFast Socket, Push-in/Push-out Ejector
SIM Card	2 SIM Card Socket
Storage	
SATA	2 SATA III (6Gbps)
mSATA	1 SATA III (Mini PCIe Type, 6Gbps)
Storage Device	▪ 1 External CFast Socket ▪ 2 2.5" SSD/HDD Tray
Power	
Power Input	6V to 36V, DC-in
Power Interface	▪ 3-pin Terminal Block : V+, V-, Frame Ground ▪ Mini-DIN 4-pin
Power Adapter	AC to DC 120W Power Adapter (Optional)
Ignition Control	16 Mode (Internal)
Remote Switch	3-pin Terminal Block : On, Off, IGN
Surge Protection	Up to 80V/1ms Transient Power
Others	
TPM	Optional Infineon SLB9665 supports TPM 2.0, LPC Interface
Watchdog Timer	Reset : 1 to 255 sec./min. per step
Smart Management	Wake on LAN, PXE supported
HW Monitor	Monitoring temperature, voltages. Auto throttling control when CPU overheats.
Software Support	
OS	Windows 10, Windows 8.1, Windows 7, Linux
Mechanical	
Dimensions (W x H x L)	360.9mm x 277.8mm x 115.2mm (14.21" x 10.94" x 4.53")
Weight	7.5 kg (16.53 lb)
Front Panel Protection	IP65 Compliant
Mounting	▪ VESA Mount (75 x 75mm, 100 x 100mm) ▪ Panel Mount
Environment	
Operating Temperature	0°C to 50°C (32°F to 122°F)
Storage Temperature	-20°C to 60°C (-4°F to 140°F)
Humidity	10% to 90% Humidity, non-condensing
Relative Humidity	95% @ 50°C
Shock	▪ IEC 60068-2-27 ▪ 20G, Half-sine, 11ms
Vibration	▪ IEC 60068-2-64 ▪ Non-operation : 10Hz to 200Hz, 1.5Grms, X, Y, Z, 30 mins each Axis
EMC	CE, FCC

Dimensions

Unit : mm/ inch

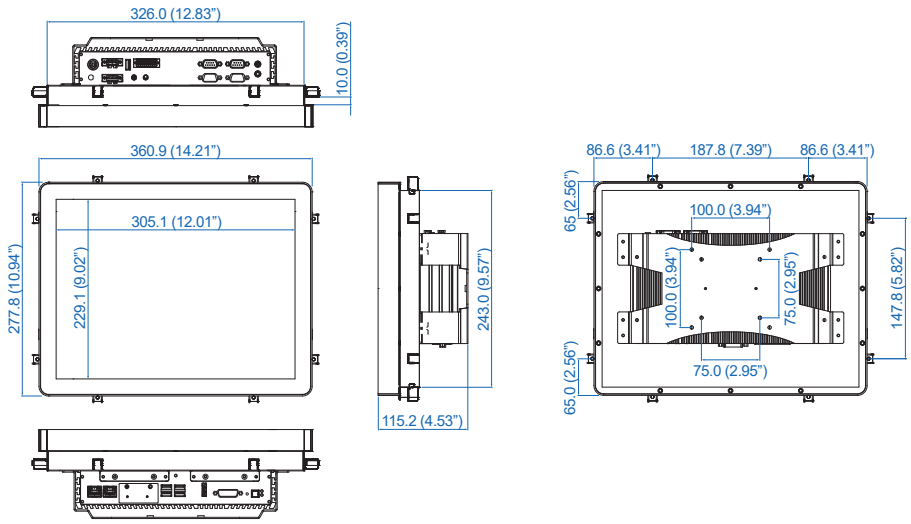

Top I/O

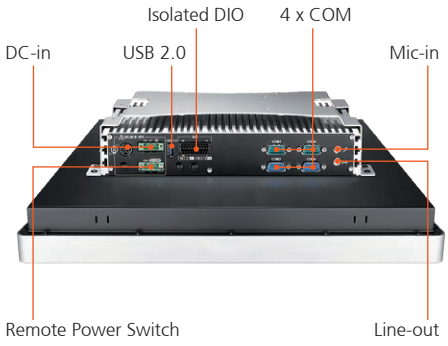

Bottom I/O

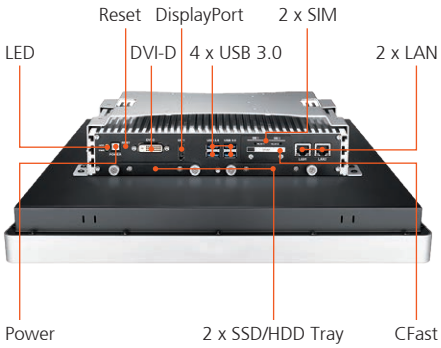

Order Information

MTC-6015-2R600U	MTC-6015 15" Fanless Multi-Touch Computer, Core™ i7-6600U Processor (Skylake-U), 2 GigE LAN, 2 Front-access SSD Tray, 5 USB 3.0, 3 USB 2.0, 32 GPIO
MTC-6015-2R300U	MTC-6015 15" Fanless Multi-Touch Computer, Intel® Core™ i5-6300U Processor (Skylake-U), 2 GigE LAN, 2 Front-access SSD Tray, 5 USB 3.0, 3 USB 2.0, 32 GPIO
MTC-6015-2R955U	MTC-6015 15" Fanless Multi-Touch Computer, Intel® Celeron® 3955U Processor (Skylake-U), 2 GigE LAN, 2 Front-access SSD Tray, 5 USB 3.0, 3 USB 2.0, 32 GPIO

Accessories

DDR4 16G	Certified DDR4 16GB 2133MHz RAM
DDR4 8G	Certified DDR4 8GB 2133MHz RAM
DDR4 4G	Certified DDR4 4GB 2133MHz RAM
PWA-120W	120W, 24V, 90VAC to 264VAC Power Adapter with 3-pin Terminal Block
PWA-120WM4P	120W, 24V, 90VAC to 264VAC Power Adapter with 4-pin Mini-DIN Connector
PWA-160W-WT	160W, 24V, 85VAC to 264VAC Power Adapter with 3-pin Terminal Block, Wide Temperature -30°C to +70°C
Panel-Mount	Panel Mount Kit
VESA Stand	VESA Table Stand
TMK2-20P-100	Terminal Block 20-pin to Terminal Block 20-pin Cable, 100cm
TMK2-20P-500	Terminal Block 20-pin to Terminal Block 20-pin Cable, 500cm
TMB-TMBK-20P	Terminal Board with One 20-pin Terminal Block Connector and DIN-Rail Mounting
3G Module	Mini PCIe 3G/GPS Module with Antenna
4G Module	Mini PCIe 4G/GPS Module with Antenna
WiFi & Bluetooth Module	Mini PCIe WiFi & Bluetooth Module with Antenna

* The rights of all brand names, product names and trademarks belong to their respective owners.
Copyright © 2018 Vecow Co., Ltd. All rights reserved.