Packaged LEDS/PCB Mount Indicators

FEATURES

- T-1¾ right angle PCB mount LED
- Diffused lens
- Stackable end to end
- Multiple color combinations available

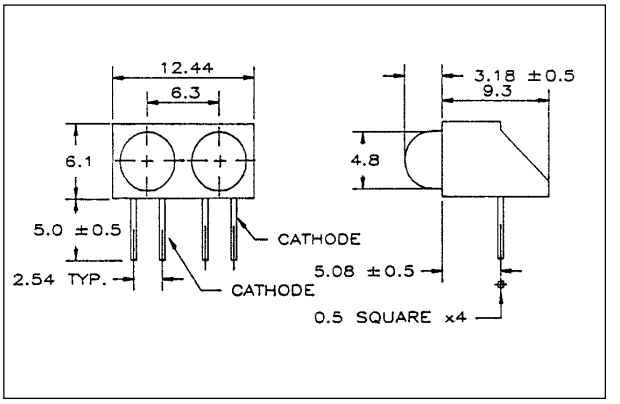

MAXIMUM RATINGS (Ta = 25°C)

PART NO.		FORWARD CURRENT(I_F) (mA)	REVERSE VOLTAGE (V_R) (V)	POWER DISSIPATION (P_D) (mW)	OPERATING TEMPERATURE (T_{opr}) (°C)	STORAGE TEMPERATURE (T_{stg}) (°C)
MTA1164-YG	(Y)	30	5.0	85	-25~+60	-25~+60
	(G)	30	5.0	85	-25~+60	-25~+60
MTA1164-HRG	(HR)	30	5.0	85	-25~+60	-25~+60
	(G)	30	5.0	85	-25~+60	-25~+60
MTA2064-G		30	5.0	85	-25~+60	-25~+60
MTA2064-Y		30	5.0	85	-25~+60	-25~+60
MTA2064-HR		30	5.0	85	-25~+60	-25~+60

OPTO-ELECTRICAL CHARACTERISTICS (Ta = 25°C)

PART NO.		MATERIAL	LENS COLOR	VIEWING ANGLE typ.	LUMINOUS INTENSITY (mcd)			FORWARD VOLTAGE (V)			REVERSE CURRENT		PEAK WAVE LENGTH
					min.	typ.	@mA	typ.	max.	@mA	µA	Vr	nm
MTA1164-YG	(Y)	GaAsP/GaP	Yellow Diff	38°	5.8	65	20	2.1	3.0	20	100	5	585
	(G)	GaP	Green Diff	38°	7.2	100	20	2.1	3.0	20	100	5	567
MTA1164-HRG	(HR)	GaAsP/GaP	Red Diff	38°	8.2	75	20	2.1	3.0	20	100	5	635
	(G)	GaP	Green Diff	38°	7.2	100	20	2.1	3.0	20	100	5	567
MTA2064-G		GaP	Green Diff	38°	7.2	100	20	2.1	3.0	20	100	5	567
MTA2064-Y		GaAsP/GaP	Yellow Diff	38°	5.8	65	20	2.1	3.0	20	100	5	585
MTA2064-HR		GaAsP/GaP	Red Diff	38°	8.2	75	20	2.1	3.0	20	100	5	635

marktech optoelectronics
120 Broadway • Menands, New York 12204
Toll Free: **(800) 98-4LEDS** • Fax: (518) 432-7454