Marktech Optoelectronics

MT900A-UR

5mm Visible Light Emitting Diode



Features:

- High Output Power
- High Luminous Intensity
- Narrow Beam Angle
- High Reliability
- Stand-offs

Applications:

- Optical Sensor
- Bar-Code Reader
- Indicators

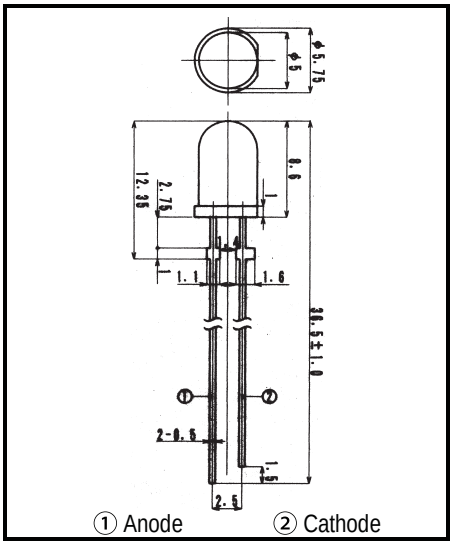

Dimensions (Unit:mm)

Absolute Maximum Ratings (Ta=25°C)

Item	Symbol	Ratings	Unit
Forward Current (DC)	IF	50	mA
Forward Current (Pulse)*1	IFP	0.5	A
Reverse Voltage	VR	5	V
Power Dissipation	PD	120	mW
Operating Temperature	Topr	-20 ~ +80	°C
Storage Temperature	Tstg	-30 ~ +100	°C
Junction Temperature	Tj	100	°C
Lead Soldering Temperature*2	Tls	260	°C

*1: Tw=10μS, T=10mS
*2: Time 3 Sec. Max, Positions: Up to 2mm from the body

Marktech Optoelectronics

MT900A-UR

Electrical & Optical Characteristics (Ta = 25°C)

Items	Symbol	Conditions	Min	Typ	Max	Unit
Power Output	PO	IF=20mA	4.0	5.0	--	mW
Luminous Intensity	Iv	IF=20mA	600	1500	--	mcd
Forward Voltage	VF	IF=20mA	--	1.8	2.2	V
Reverse Current	IR	VR=5V	--	--	100	µA
Peak Wavelength	λp	IF=20mA	--	660	--	nm
Spectral Line Half Width	Δ λ	IF=20mA	--	25	--	nm
Half Intensity Beam Angle	θ	IF=20mA	--	±12	--	deg.
Rise Time	Tr	IFP=20mA	--	30	--	nS
Fall Time	Tf	IFP=20mA	--	30	--	nS
Junction Capacitance	Cj	IMHz, V=0V	--	20	--	pF
Temp. Coefficient of IV	I/T	IF=10mA	--	-0.5	--	%/°C
Temp Coefficient of VF	V/T	IF=10mA	--	-1.5	--	mV/°C

Graphs:

