MSW200x-200

SP2T PIN Diode Switch

Rev. V1

Features

- Wide Frequency Range: 50 MHz to 6 GHz, in 3 bands
- Surface Mount SP2T Switch in Compact Outline: 8 mm L x 5 mm W x 2.5 mm H
- Higher Average Power Handling than Plastic Packaged
- MMIC Switches: 125 W CW
- High RF Peak Power: 500 W
- Low Insertion Loss: 0.25 dB
- High IIP3: 65 dBm
- Operates From Positive Voltage Only: 5 V & 28 V to 125 V
- RoHS* Compliant

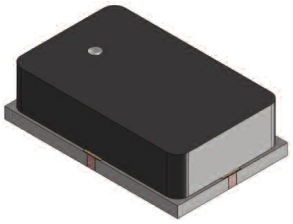

CS200

Functional Schematic

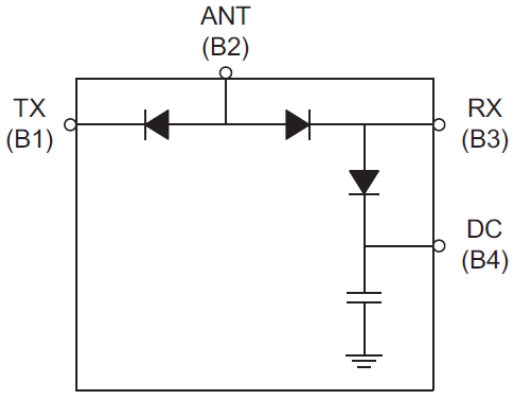

Description

The MSW200x-200 series of surface mount silicon PIN diode SP2T switches handle high power signals from 50 MHz to 1 GHz (MSW2000), 400 MHz to 4 GHz (MSW2001) and 2 to 6 GHz (MSW2002), in transmit-receive (TR), active receiver protection and other applications. This series is manufactured using a proven hybrid manufacturing process incorporating high voltage PIN diodes and passive devices integrated within a ceramic substrate. These low profile, compact, surface mount components, offer superior small and large signal performance superior to that of MMIC devices in QFN packages. The SP2T switches are designed in an asymmetrical topology to minimize Tx-Ant loss and maximize Tx-Rx isolation performance. The very low thermal resistance (<10ºC/W) of the PIN diodes in these devices enables them to reliably handle RF incident power levels of 50 dBm CW and RF peak incident power levels of 53 dBm in cold switching applications at T_A = 85ºC. The low PIN diode series resistance (<0.8 Ω), coupled with their long minority carrier lifetime,(>2 µs), provides input third order intercept point (IIP3) greater than 65 dBm.

These MSW200x-200 series SP2T switches are designed to be used in high average and peak power switch applications, operating from 50 MHz to 6 GHz in three bands, which utilize high volume, surface mount, solder re-flow manufacturing. These products are durable and capable of reliably operating in military, commercial, and industrial environments.

Ordering Information

Part Number	Package
MSW2000-200-T	tube
MSW2000-200-R	250 or 500 piece reel
MSW2000-200-W	Waffle pack
MSW2001-200-T	tube
MSW2001-200-R	250 or 500 piece reel
MSW2001-200-W	Waffle pack
MSW2002-200-T	tube
MSW2002-200-R	250 or 500 piece reel
MSW2002-200-W	Waffle pack
MSW2000-200-E	RF evaluation board
MSW2001-200-E	RF evaluation board
MSW2002-200-E	RF evaluation board

* Restrictions on Hazardous Substances, European Union Directive 2011/65/EU.

M/A-COM Technology Solutions Inc. (MACOM) and its affiliates reserve the right to make changes to the product(s) or information contained herein without notice.
Visit www.macom.com for additional data sheets and product information.

For further information and support please visit:
https://www.macom.com/support

MSW2000-200 Electrical Specifications: T_A = +25°C, P_{IN} = 0 dBm, Z_0 = 50 Ω

Parameter	Test Conditions	Units	Min.	Typ.	Max.
Frequency	—	MHz	50	—	1000
TX-Ant Insertion Loss	Condition 1	dB	—	0.15	0.25
Ant-RX Insertion Loss	Condition 2	dB	—	0.25	0.35
TX-Ant Return Loss	Condition 1	dB	20	22	—
Ant-RX Return Loss	Condition 2	dB	20	23	—
TX-RX Isolation	Condition 1	dB	48	52	—
RX-TX Isolation	Condition 2	dB	22	26	—
TX CW Incident Power[1]	Condition 1, 1.5:1 Source & Load VSWR	dBm	—	—	50
RX CW Incident Power[1]	Condition 2, 1.5:1 Source & Load VSWR	dBm	—	—	43
TX Peak Incident Power[1]	Condition 1, 10 µs Pulse Width, 1% Duty Cycle, 1.5:1 Source & Load VSWR (IL)	dBm	—	—	57
Switching Time[2]	10% - 90% RF Voltage	µs	—	2	3
Input IP3	F1 = 500 MHz, F2 = 510 MHz, P1=P2=10 dBm	dBm	60	65	—

MSW2001-200 Electrical Specifications: T_A = +25°C, P_{IN} = 0 dBm, Z_0 = 50 Ω

Parameter	Test Conditions	Units	Min.	Typ.	Max.
Frequency	—	MHz	400	—	4000
TX-Ant Insertion Loss	Condition 1	dB	—	0.3	0.4
Ant-RX Insertion Loss	Condition 2	dB	—	0.4	0.5
TX-Ant Return Loss	Condition 1	dB	15	18	—
Ant-RX Return Loss	Condition 2	dB	15	17	—
TX-RX Isolation	Condition 1	dB	32	36	—
RX-TX Isolation	Condition 2	dB	12	14	—
TX CW Incident Power[1]	Condition 1, 1.5:1 Source & Load VSWR	dBm	—	—	50
RX CW Incident Power[1]	Condition 2, 1.5:1 Source & Load VSWR	dBm	—	—	43
TX Peak Incident Power[1]	Condition 1, 10 µs Pulse Width, 1% Duty Cycle, 1.5:1 Source & Load VSWR (IL)	dBm	—	—	57
Switching Time[2]	10% - 90% RF Voltage	µs	—	1.5	2.0
Input IP3	F1 = 2.0 GHz, F2 = 2.01 GHz, P1=P2=40 dBm	dBm	60	65	—

Continued

M/A-COM Technology Solutions Inc. (MACOM) and its affiliates reserve the right to make changes to the product(s) or information contained herein without notice.
Visit www.macom.com for additional data sheets and product information.

For further information and support please visit:
https://www.macom.com/support

MSW2002-200 Electrical Specifications: T_A = +25°C, P_{IN} = 0 dBm, Z_0 = 50 Ω

Parameter	Test Conditions	Units	Min.	Typ.	Max.
Frequency	—	GHz	2	—	6
TX-Ant Insertion Loss	Condition 1	dB	—	0.6	0.7
Ant-RX Insertion Loss	Condition 2	dB	—	0.9	1.0
TX-Ant Return Loss	Condition 1	dB	13	15	—
Ant-RX Return Loss	Condition 2	dB	11	13	—
TX-RX Isolation	Condition 1	dB	32	34	—
RX-TX Isolation	Condition 2	dB	11	13	—
TX CW Incident Power[1]	Condition 1, 1.5:1 Source & Load VSWR	dBm	—	—	50
RX CW Incident Power[1]	Condition 2, 1.5:1 Source & Load VSWR	dBm	—	—	43
TX Peak Incident Power[1]	Condition 1, 10 µs Pulse Width, 1% Duty Cycle, 1.5:1 Source & Load VSWR (IL)	dBm	—	—	57
Switching Time[2]	10% - 90% RF Voltage	µs	—	1.0	1.5
Input IP3	F1 = 500 MHz, F2 = 510 MHz, P1=P2=40 dBm	dBm	60	65	—

Bias State Conditions:

Transmit State
(TX - ANT in low insertion loss state):

a. B1: -100 mA
b. B2: +100 mA
c. B3: -25 mA, +28 V
d. B4: +25 mA

Small Signal Receive State
(ANT - RX in low insertion loss state):

a. B1: +28 V
b. B2: +100 mA
c. B3: -100 mA, 0 V
d. B4: +28 V

1. PIN diode DC reverse voltage to maintain high resistance in the OFF PIN diode is determined by RF frequency, incident power, and VSWR as well as by the characteristics of the diode. The minimum reverse bias voltage values are provided in this datasheet. The input signal level applied for small signal testing is approximately 0 dBm.
2. Switching time (50% TTL - 10/90% RF Voltage) is a function of the PIN diode driver performance as well as the characteristics of the diode. An RC "current spiking network" is used on the driver output to provide a transient current to rapidly remove stored charge from the PIN diode. Typical component values are: R = 50 to 220 Ω and C = 470 to 1,000 pF. MACOMs MPD2T28125-700 is the recommended PIN diode driver to interface with the MSW2000-200, MSW2001-200 SP2T and MSW2002-200 switches. Its data sheet is available.

M/A-COM Technology Solutions Inc. (MACOM) and its affiliates reserve the right to make changes to the product(s) or information contained herein without notice.
Visit www.macom.com for additional data sheets and product information.

For further information and support please visit:
https://www.macom.com/support

Truth Table

Port J0 - J1	Port J0 - J2	Bias: B1	Bias: B2	Bias: B3	Bias: B4
Low Loss	Isolation	-100 mA	+100 mA	+25 mA @ +28 V	-25 mA
Isolation	Low Loss	+28 V	+25 mA	-25 mA	+28 V

Evaluation Board Truth Table

Port J0 - J1	Ant Bias (P1-pin 3)	TX Bias (P1-pin 1)	RX Bias (P1-pin 7)	DC Bias (P1-pin 5)
TX-ANT Low Loss & TX-RX Isolation	+5 V @ +100 mA	0 V @ +100 mA	+28 V @ +25 mA	0 V @ +25 mA
ANT-RX Low Loss & RX-TX Isolation	+5 V @ +100 mA	+28 V @ 0 mA	0 V @ +100 mA	+28 V @ 0 mA

RF Bias Network Component Values

Part #	Frequency (MHz)	Inductors	DC Blocking Capacitors	RF Bypass Capacitors
MSW2000-200	50 - 1000	4.7 µH	0.1 µF	0.1 µF
MSW2001-200	400 - 4000	82 nH	27 pF	270 pF
MSW2002-200	2000 - 6000	33 nH	22 pF	33 pF

M/A-COM Technology Solutions Inc. (MACOM) and its affiliates reserve the right to make changes to the product(s) or information contained herein without notice.
Visit www.macom.com for additional data sheets and product information.

For further information and support please visit:
https://www.macom.com/support

Minimum Reverse Bias Voltage[3]: P_{INC} = 125 W CW, Z_0 = 50 Ω with 1.5:1 VSWR

Part #	20 MHz	100 MHz	200 MHz	400 MHz	1 GHz	4 GHz
MSW2000-200	120 V	110 V	85 V	55 V	28 V	N/A
MSW2001-200	N/A	N/A	110 V	85 V	55 V	28 V
MSW2002-200	(F = 1 GHz) 55 V	(F = 2 GHz) 28 V	(F = 3 GHz) 28 V	(F = 4 GHz) 28 V	(F = 5 GHz) 28 V	(F = 6 GHz) 28 V

3. N/A denotes the switch is not recommended for that frequency band.

The minimum reverse bias voltage required to maintain a PIN diode out of conduction in the presence of a large RF signal is given by:

$$|V_{DC}| = \frac{|V_{RF}|}{\sqrt{1 + \left[\left(\frac{0.0142 \times f_{MHz} \times W_{mils}^2}{V_{RF} \times \sqrt{D}}\right) \times \left(1 + \sqrt{1 + \left(\frac{0.056 \times V_{RF} \times \sqrt{D}}{W_{mils}}\right)^2}\right)\right]^2}}$$

Where:

$|V_{DC}|$ = magnitude of the minimum DC reverse bias voltage
$|V_{RF}|$ = magnitude of the peak RF voltage (including the effects of the VSWR)
F_{MHz} = lowest RF signal frequency expressed in MHz
D = duty factor of the RF signal
W_{MILS} = thickness of the diode I layer, expressed in mils (thousands of an inch)

R. Caverly and G. Hiller, —Establishing the Minimum Reverse Bias for a PIN Diode in a High Power Switch, IEEE Transactions on Microwave Theory and Techniques, Vol.38, No.12, December 1990

M/A-COM Technology Solutions Inc. (MACOM) and its affiliates reserve the right to make changes to the product(s) or information contained herein without notice.
Visit www.macom.com for additional data sheets and product information.

For further information and support please visit:
https://www.macom.com/support

Absolute Maximum Ratings

Parameter	Conditions	Absolute Maximum
Forward Current	Ant, TX or RX Port DC Port	250 mA 150 mA
Reverse Voltage	TX or RX Port DC Port	125 V 125 V
Forward Diode Voltage	I_F = 250 mA	1.2 V
CW Incident Power Handling[4]	TX or Ant Port Source & Load VSWR = 1.5:1, T_C = 85°C, cold switching	50 dBm
CW Incident Power Handling[4]	RX or Ant Port Source & Load VSWR = 1.5:1, T_C = 85°C, cold switching	43 dBm
Peak Incident Power Handling[4]	RX or Ant Port Source & Load VSWR = 1.5:1, T_C = 85°C, cold switching, Pulse Width = 10 µs, Duty Cycle = 1%	57 dBm
Total Dissipated RF & DC Power[4]	T_C = 85°C, cold switching	3.5 W
Junction Temperature	—	+175°C
Operating Temperature	—	-65°C to +125°C
Storage Temperature	—	-65°C to +150°C
Assembly Temperature	t = 10 s	+260°C

4. Backside RF and DC grounding area of device must be completely solder attached to the RF circuit board vias for proper electrical and thermal circuit grounding.

Handling Procedures

Please observe the following precautions to avoid damage:

Static Sensitivity

These electronic devices are sensitive to electrostatic discharge (ESD) and can be damaged by static electricity. Proper ESD control techniques should be used when handling these Class 1C (HBM) devices. The moisture sensitivity level (MSL) rating for this part is MSL 1.

Environmental Capabilities

The MSW204x-204 diode is capable of meeting the environmental requirements of MIL-STD-202 and MIL-STD-750.

M/A-COM Technology Solutions Inc. (MACOM) and its affiliates reserve the right to make changes to the product(s) or information contained herein without notice.
Visit www.macom.com for additional data sheets and product information.

For further information and support please visit:
https://www.macom.com/support

Typical Performance Curves: MSW2000-200

Insertion Loss (TX State)

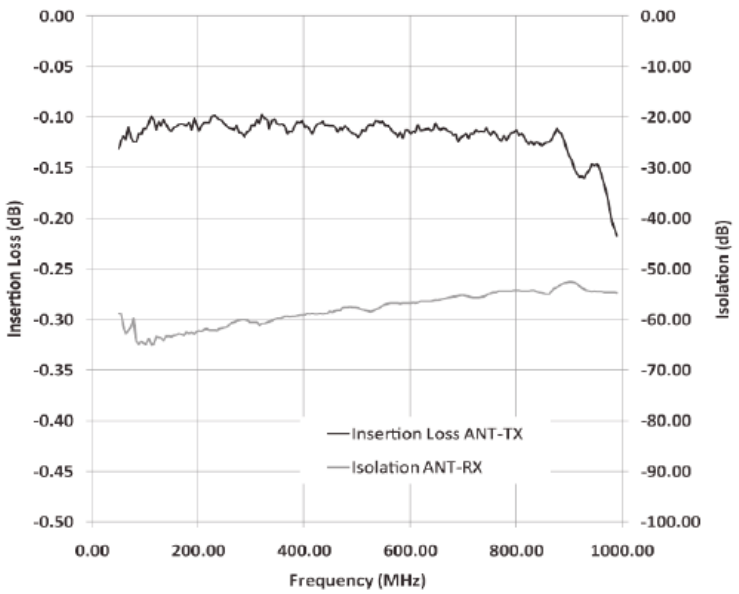

Insertion Loss (RX State)

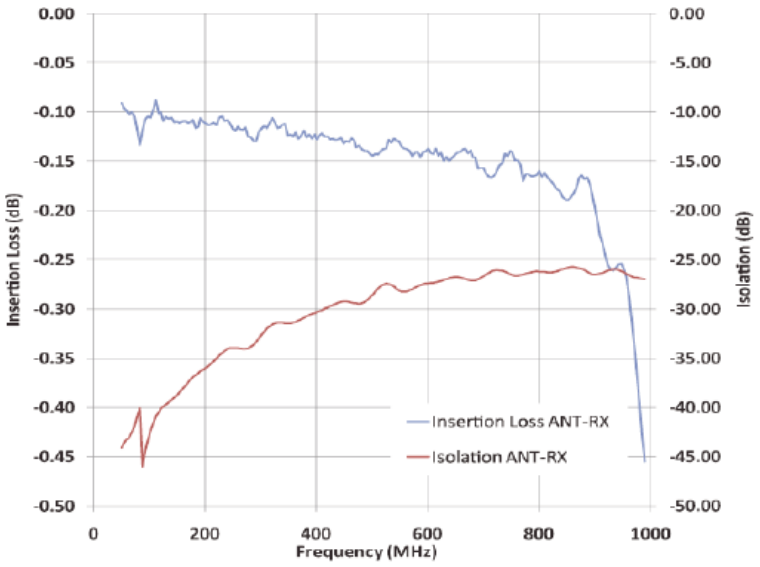

M/A-COM Technology Solutions Inc. (MACOM) and its affiliates reserve the right to make changes to the product(s) or information contained herein without notice.
Visit www.macom.com for additional data sheets and product information.

For further information and support please visit:
https://www.macom.com/support

Typical Performance Curves: MSW2001-200

Insertion Loss (TX State)

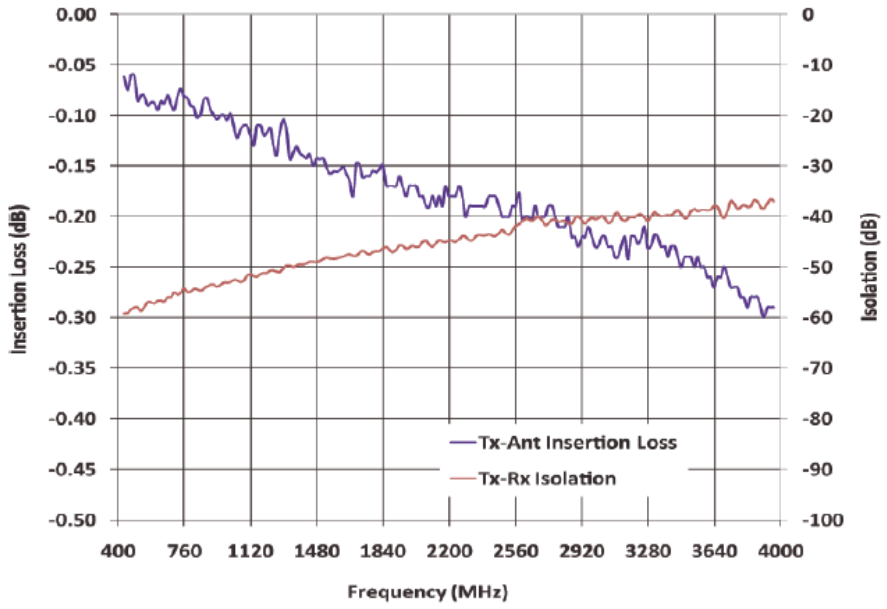

Insertion Loss (RX State)

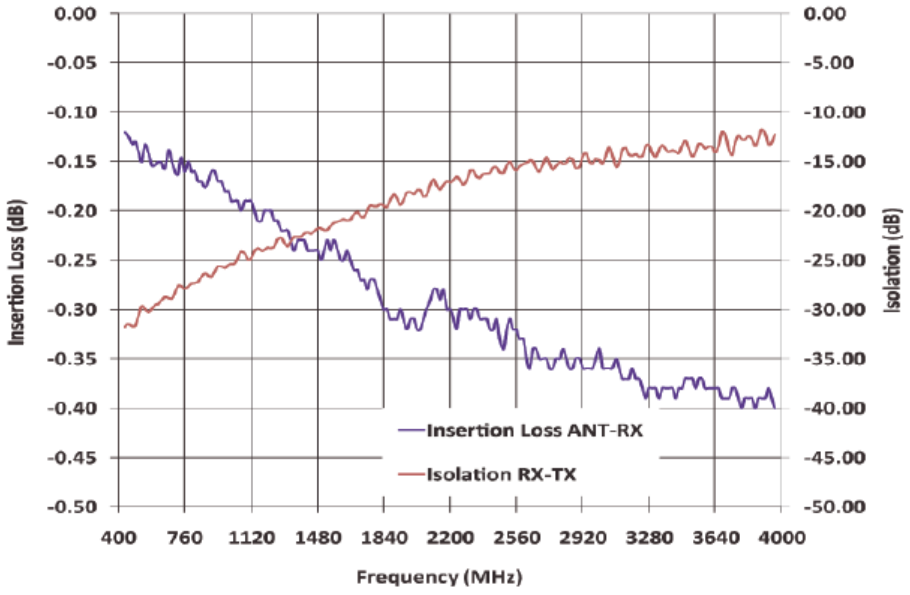

M/A-COM Technology Solutions Inc. (MACOM) and its affiliates reserve the right to make changes to the product(s) or information contained herein without notice.
Visit www.macom.com for additional data sheets and product information.

For further information and support please visit:
https://www.macom.com/support

Typical Performance Curves: MSW2002-200

Insertion Loss (TX State)

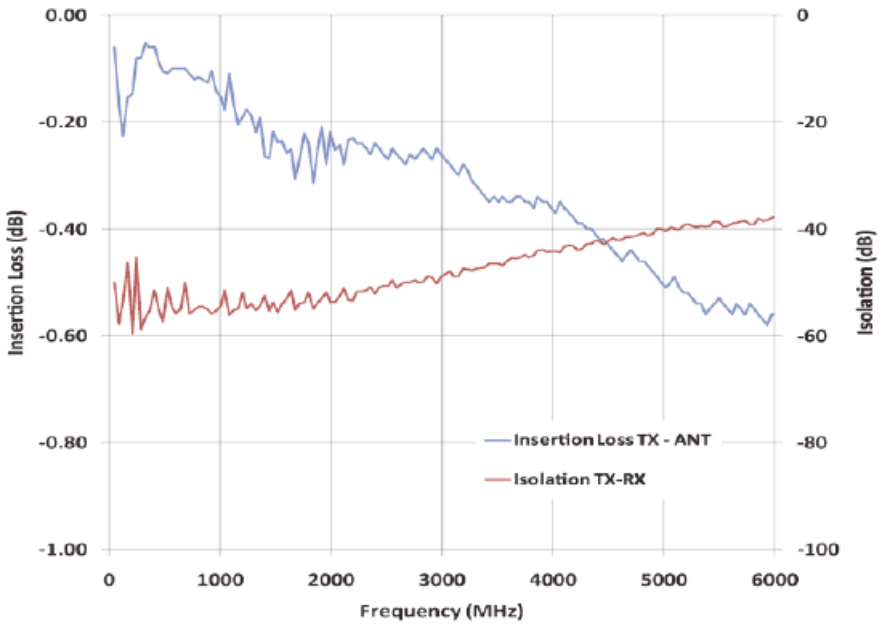

Insertion Loss (RX State)

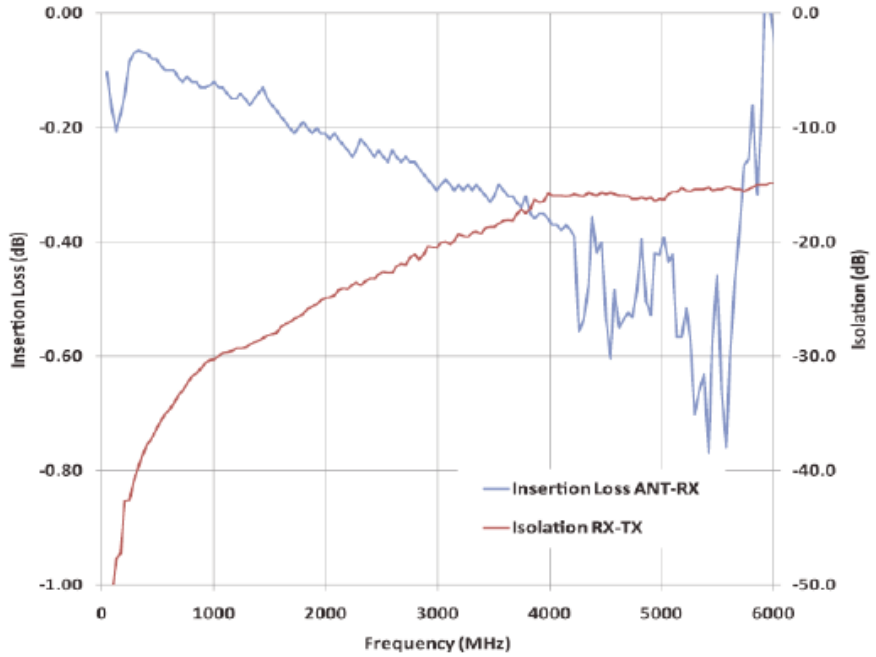

M/A-COM Technology Solutions Inc. (MACOM) and its affiliates reserve the right to make changes to the product(s) or information contained herein without notice.
Visit www.macom.com for additional data sheets and product information.

For further information and support please visit:
https://www.macom.com/support

SP2T Switch Evaluation Board Schematic

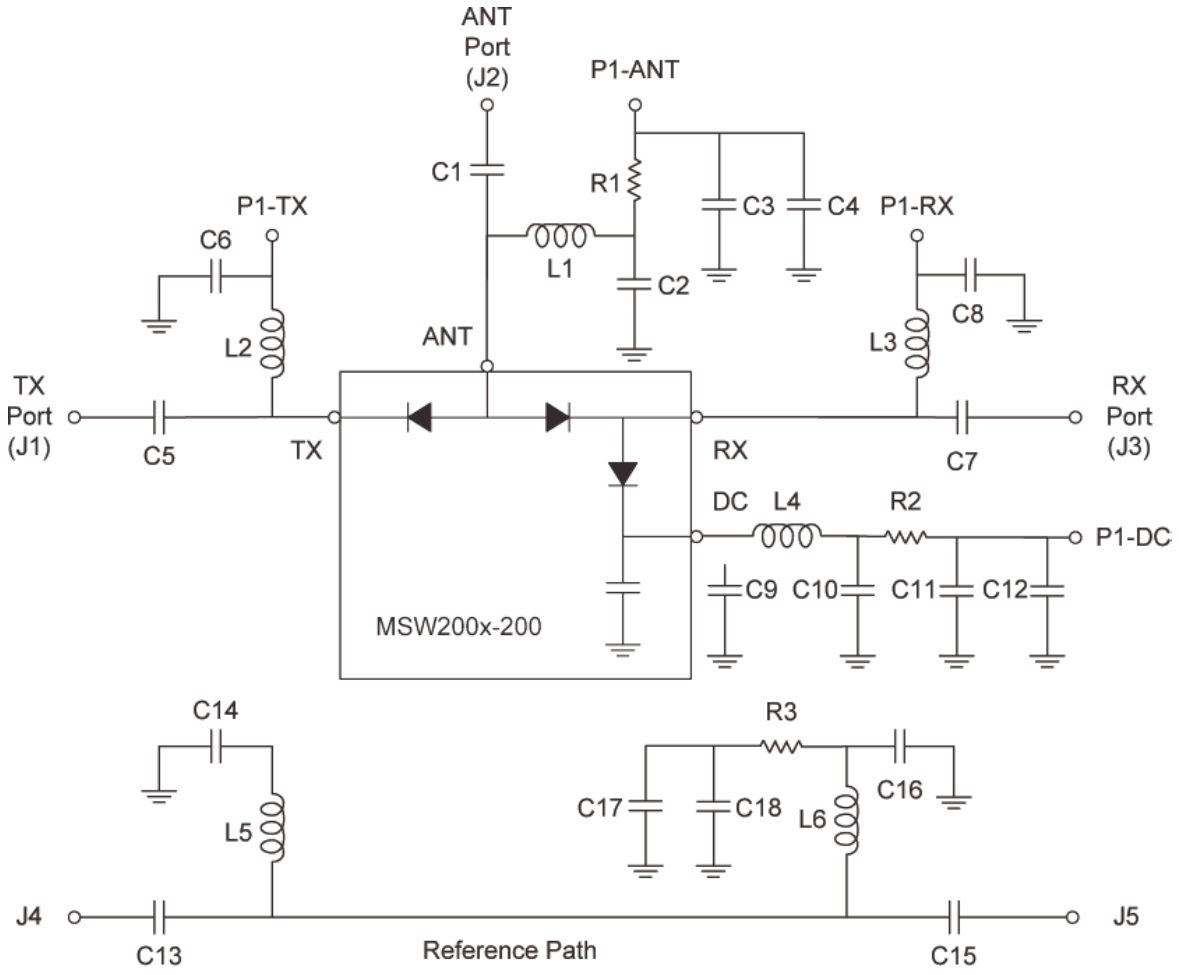

The evaluation boards for the MSW200x-200 family of surface mount silicon PIN diode SP2T T-R switches allow the full exercise of each switch for small signal performance analysis, as well as for large signal operation with maximum input signal power of 45 dBm (CW or peak power). Each evaluation board includes the appropriate MSW200x -200 switch, DC blocking capacitors at each RF port and bias decoupling networks at each RF port which allow DC or low frequency control signals to be applied to the switch.

Three complementary control signals are required for proper operation. Bias voltages are applied to the TX bias port, RX bias port and the DC bias port to control the state of the switch. A bias voltage of 5 V must be applied to the Ant Bias (pin 3 of multi-pin connector P1) port whenever the switch is in operation.

M/A-COM Technology Solutions Inc. (MACOM) and its affiliates reserve the right to make changes to the product(s) or information contained herein without notice.
Visit www.macom.com for additional data sheets and product information.

For further information and support please visit:
https://www.macom.com/support

Transmit State

In the TX state, the series PIN diode between the ANT and TX ports is forward biased by applying 0 V to the TX bias input port (pin 1 of multi-pin connector P1). The magnitude of the resultant bias current through the diode is primarily determined by the voltage applied to the ANT bias port (pin 3 of J1), the magnitude of the forward voltage across the PIN diode and the resistance of R1. This current is nominally 100 mA. At the same time, the PIN diode connected between RX and DC ports is also forward biased by applying a higher bias voltage, nominally 28 V, to the RX bias port (pin 7 of P1) and 0 V to the DC bias port (pin 5 of P1). Under this condition, the PIN diode connected between the ANT and RX port is reverse biased and the PIN diode connected between the RX and DC ports is forward biased. The magnitude of the bias current through this diode is primarily determined by the voltage applied to the RX bias port, the magnitude of the forward voltage across the PIN diode and the resistance of R2. This current is nominally 25 mA.

The RX series PIN diode, which is connected between the ANT and RX ports, must be reverse biased during the transmit state. The reverse bias voltage must be sufficiently large to maintain the diode in its non-conducting, high impedance state when large RF signal voltage may be present in the ANT-to-TX path. The reverse voltage across this diode is the arithmetic difference of the bias voltage applied to the RX bias port and the DC forward voltage of the forward-biased transmit series PIN diode.

The minimum voltage required to maintain the series diode on the RX side of the switch out of conduction is a function of the magnitude of the RF voltage present, the standing wave present at the RX series diode's anode, the frequency of the RF signal and the characteristics of the RX series diode, among other factors. Minimum control voltages for several signal frequencies are shown in the table "Minimum Reverse Bias Voltage", assuming the input power to the RX or ANT port to be 100 W CW and the VSWR on the ANT-TX path to be 1.5:1. It is important to note that the evaluation board, as supplied from the factory, is not capable of handling RF input signals larger than 45 dBm. If performance of the switch under larger input signals is to be evaluated, an adequate heat sink must be properly attached to the evaluation board, and several of the passive components on the board must be changed in order to safely handle the dissipated power as well as the high bias voltage necessary for proper performance. Contact the factory for recommended components and heat sink.

Receive State

In the RX state, the series PIN diode between the ANT and RX ports is forward biased by applying 0 V to the RX bias input port (pin 7 of multi-pin connector P1). The magnitude of the resultant bias current through the diode is primarily determined by the voltage applied to the ANT bias port (pin 3 of P1), the magnitude of the forward voltage across the PIN diode and the resistance of R1. This current is nominally 100 mA. At the same time, the PIN diode connected between RX and DC ports is reverse biased by applying a high bias voltage, nominally 28 V, to the DC bias port (pin 5 of P1). A high voltage, nominally 28 V, is also applied to the TX bias port (pin 1 of P1). Under this condition, the PIN diode connected between the ANT and TX port is reverse biased thus isolating the TX RF port from the RX signal path. The reverse voltage across this diode is the arithmetic difference of the bias voltage applied to the TX bias port and the DC forward voltage of the forward-biased receive series PIN diode. The minimum voltage required to maintain the series diode on the TX side of the switch out of conduction is a function of the magnitude of the RF voltage present, the standing wave present at the RX series diode's anode, the frequency of the RF signal and the characteristics of the TX series diode, among other factors. For typical receive-level signals, this diode is held out of conduction with a relatively small reverse bias voltage. The values of the reactive components which comprise the bias decoupling networks as well as the signal path DC blocking are shown in the table RF Bias Network Component Values.

Reference Path

A reference path is provided on the evaluation board, complete with bias decoupling networks, so that the magnitude of the insertion loss of the micro-strip transmission lines connected to the switch and the associated bias decoupling components can be measured and removed from the measured performance of the switch.

M/A-COM Technology Solutions Inc. (MACOM) and its affiliates reserve the right to make changes to the product(s) or information contained herein without notice.
Visit www.macom.com for additional data sheets and product information.

For further information and support please visit:
https://www.macom.com/support

SP2T Switch Evaluation Board Layout

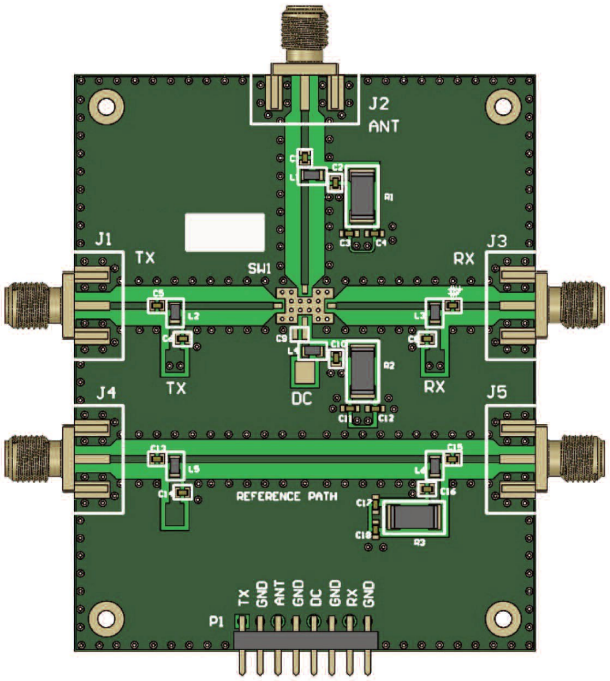

Evaluation Board Parts List

MSW2000-200 Band 1		
Part	**Value**	**Case Style**
C1, C2, C5 - C8, C13 - C16	0.1 µF	0603
[5]C3, C4, C11, C12, C17, C18	0.1 µF	0603
L1 - L6	47 µH	1008
R1, R3	39 Ω	2512
R2	1200 Ω	2512

MSW2001-200 Band 2		
Part	**Value**	**Case Style**
C1, C5, C7, C13, C15	47 pF	0603
C2, C6, C8, C9, C10, C14, C16	220 pF	0603
C3, C4, C11, C12, C17, C18	1000 pF	0603
L1 - L6	43 nH	0603
R1, R3	39 Ω	2512
R2	1200 Ω	2512

MSW2002-200 Band 3		
Part	**Value**	**Case Style**
C1, C5, C7, C13, C15	10 pF	0603
C2, C6, C8, C9, C10, C14	33 pF	0603
C3, C4, C10, C11, C12, C17, C18	1000 pF	0603
L1 - L5	8.2 nH	0603
R1	39 Ω	2512
R2, R3	1200 Ω	2512

7. Second bypass capacitor is optional.

M/A-COM Technology Solutions Inc. (MACOM) and its affiliates reserve the right to make changes to the product(s) or information contained herein without notice.
Visit www.macom.com for additional data sheets and product information.

For further information and support please visit:
https://www.macom.com/support

Assembly Instructions

SP2T PIN Diodes may be placed onto circuit boards with pick and place manufacturing equipment from tape and reel. The devices are attached to the circuit using conventional solder re-flow or wave soldering procedures with RoHS type or Sn 60 / Pb 40 type solders.

Table 1. Time-Temperature Profile for Sn60/Pb40 or RoHS Type Solders

Profile Feature	SnPb Solder Assembly	Pb-Free Solder Assembly
Average Ramp-Up Rate (T_L to T_P)	3°C /second maximum	3°C /second maximum
Preheat: - Temperature Min (T_{SMIN}) - Temperature Max (T_{SMAX}) - Time (min to max)(t_S)	 100°C 150°C 60-120 s	 150°C 200°C 60-180 s
T_{SMAX} to T_L - Ramp-Up Rate		3°C/s maximum
Time Maintained Above: - Temperature (T_L) - Time (t_L)	 183°C 60-150 s	 217°C 60-150 s
Peak temperature (T_P)	225 +0/-5°C	260 +0/-5°C
Time Within 5°C of Actual Peak Temperature (t_P)	10 – 30 s	20 – 40 s
Ramp-Down Rate	6°C /s maximum	6°C /s maximum
Time 25°C to Peak Temperature	6 minutes maximum	8 minutes maximum

Figure 1. Solder Re-Flow Time-Temperature Profile

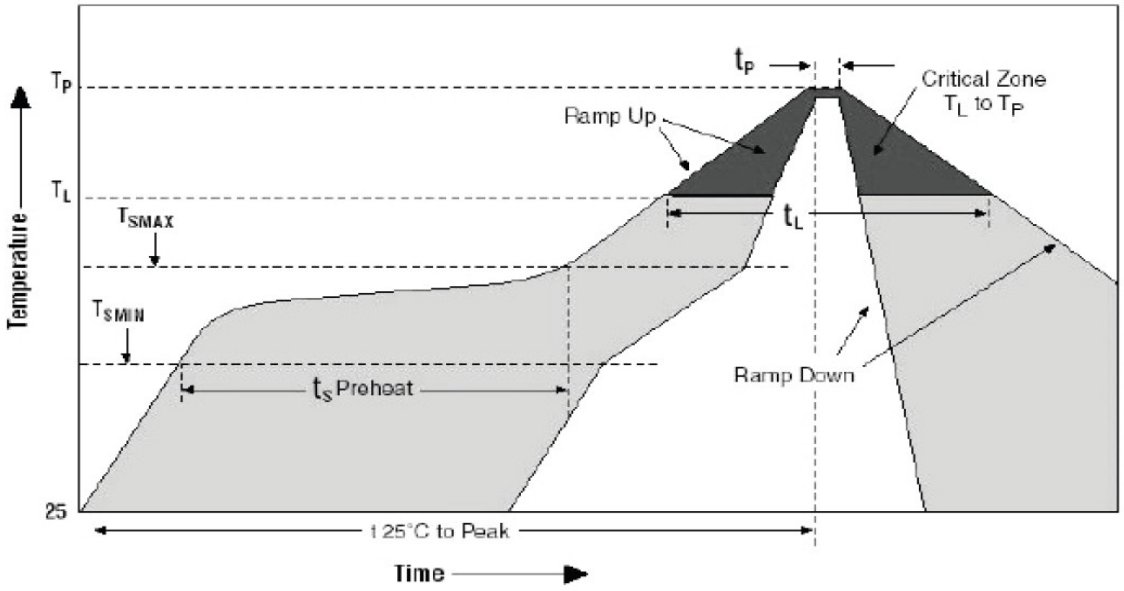

M/A-COM Technology Solutions Inc. (MACOM) and its affiliates reserve the right to make changes to the product(s) or information contained herein without notice.
Visit www.macom.com for additional data sheets and product information.

For further information and support please visit:
https://www.macom.com/support

Outline (CS204)[8,9]

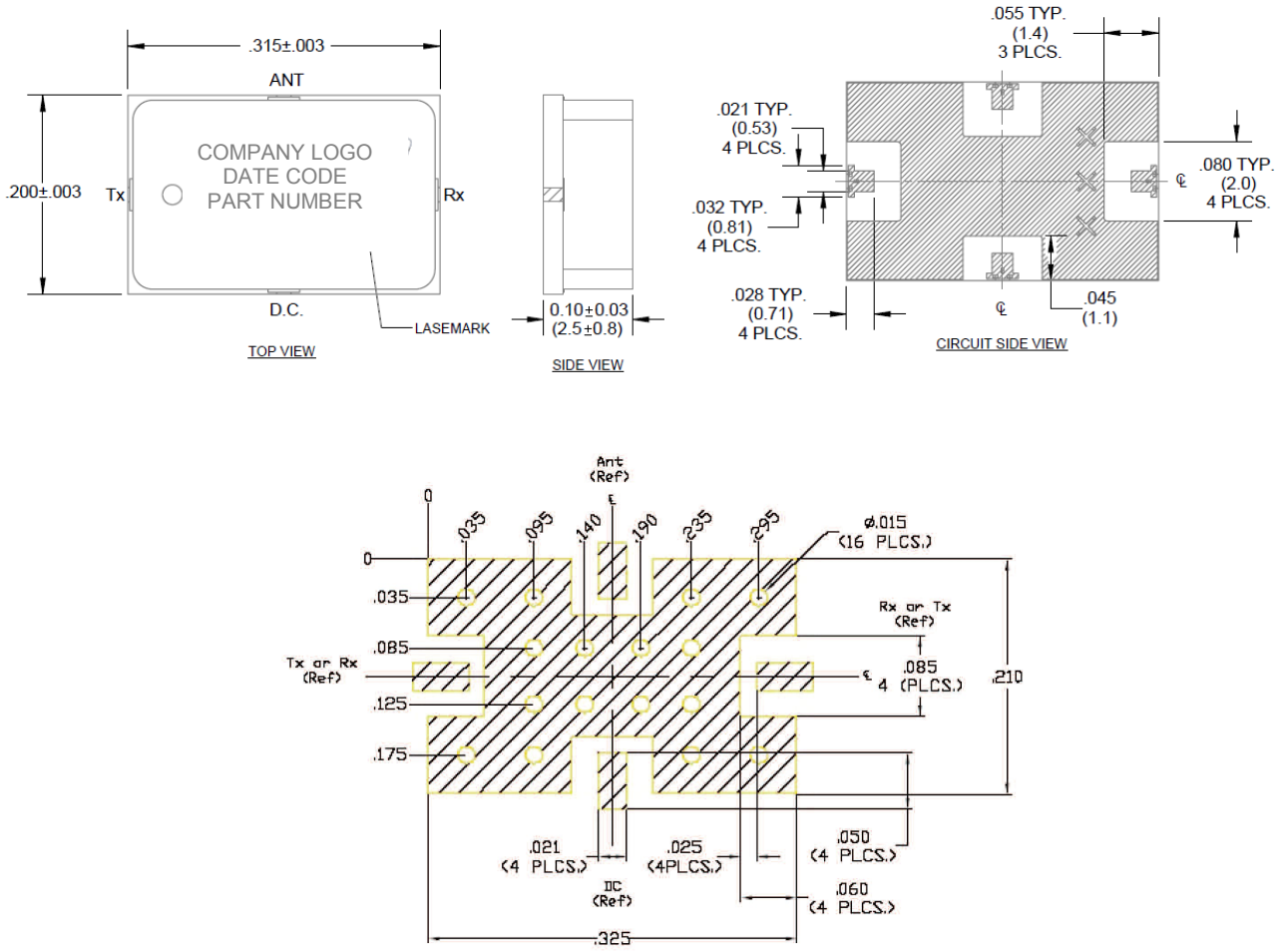

RF Circuit Solder footprint

8. Hatched metal area on circuit side of device is RF, DC and thermal grounded.
9. Vias should be solid copper fill and gold plated for optimum heat transfer from backside of switch module through Circuit Vias to metal thermal ground.

M/A-COM Technology Solutions Inc. (MACOM) and its affiliates reserve the right to make changes to the product(s) or information contained herein without notice.
Visit www.macom.com for additional data sheets and product information.

For further information and support please visit:
https://www.macom.com/support

M/A-COM Technology Solutions Inc. All rights reserved.

Information in this document is provided in connection with M/A-COM Technology Solutions Inc ("MACOM") products. These materials are provided by MACOM as a service to its customers and may be used for informational purposes only. Except as provided in MACOM's Terms and Conditions of Sale for such products or in any separate agreement related to this document, MACOM assumes no liability whatsoever. MACOM assumes no responsibility for errors or omissions in these materials. MACOM may make changes to specifications and product descriptions at any time, without notice. MACOM makes no commitment to update the information and shall have no responsibility whatsoever for conflicts or incompatibilities arising from future changes to its specifications and product descriptions. No license, express or implied, by estoppels or otherwise, to any intellectual property rights is granted by this document.

THESE MATERIALS ARE PROVIDED "AS IS" WITHOUT WARRANTY OF ANY KIND, EITHER EXPRESS OR IMPLIED, RELATING TO SALE AND/OR USE OF MACOM PRODUCTS INCLUDING LIABILITY OR WARRANTIES RELATING TO FITNESS FOR A PARTICULAR PURPOSE, CONSEQUENTIAL OR INCIDENTAL DAMAGES, MERCHANTABILITY, OR INFRINGEMENT OF ANY PATENT, COPYRIGHT OR OTHER INTELLECTUAL PROPERTY RIGHT. MACOM FURTHER DOES NOT WARRANT THE ACCURACY OR COMPLETENESS OF THE INFORMATION, TEXT, GRAPHICS OR OTHER ITEMS CONTAINED WITHIN THESE MATERIALS. MACOM SHALL NOT BE LIABLE FOR ANY SPECIAL, INDIRECT, INCIDENTAL, OR CONSEQUENTIAL DAMAGES, INCLUDING WITHOUT LIMITATION, LOST REVENUES OR LOST PROFITS, WHICH MAY RESULT FROM THE USE OF THESE MATERIALS.

MACOM products are not intended for use in medical, lifesaving or life sustaining applications. MACOM customers using or selling MACOM products for use in such applications do so at their own risk and agree to fully indemnify MACOM for any damages resulting from such improper use or sale.