Monitoring Safety Relays with Delayed Outputs

Minotaur MSR10D



Description

The MSR10RD has 2 N.C. dual channel input for use with gate interlocks and emergency stop buttons in higher risk applications.

The MSR10RD has output monitoring that accommodates automatic/manual or monitored manual reset. Automatic/manual reset can use a jumper or can be used to check operation of the contacts. Monitored manual requires the use of a manually operated normally open momentary switch to activate the outputs.

The MSR10RD has 8 N.O. instantaneous safety outputs and 1 N.C. instantaneous auxiliary outputs as well as 1 N.O. safety and 1 N.C. auxiliary delayed outputs. The delay is set by an internal potentiometer. The safety outputs have independent and redundant internal contacts to help ensure the safety function. The auxiliary contact is an nonsafety output intended to provide an external signal about the status of the safety outputs.

Features

- Category 3 per EN 954-1
- Stop category 0 and 1
- 2 N.C. dual channel input
- 8 N.O. instantaneous safety outputs
- 1 N.C. instantaneous auxiliary output
- 1 N.O. delayed safety output
- 1 N.C. delayed auxiliary output
- Automatic/manual or monitored manual reset
- 152mm wide housing

Specifications

Standards	EN 954-1, ISO 13849-1, IEC/EN 60204-1, IEC 60947-4-1, IEC 60947-5-1, ANSI B11.19, AS4024.1
Category	Cat. 3 per EN 954-1 (ISO 13849-1)
Approvals	C-Tick, CE marked for all applicable directives and cULus
Power Supply	24V AC/DC and 110/230V AC
Power Consumption	<4VA
Safety Inputs	2 N.C.
Input Simultaneity	0.5s
Maximum Input Resistance	500 Ω
Reset	Monitored Manual or Auto./Manual
Outputs	8 N.O. Safety Instantaneous 1 N.O. Safety delayed 0.1 to 10s 1 N.C. Auxiliary Instantaneous 1 N.C. Auxiliary delayed 0.1 to 10s
❶ Output Utilization per IEC 60947-5-1 (Inductive)	B300, AC-15 4A/250V AC, 4A/125V AC P300, DC-13 3A/24V DC
Thermal Current (non switching)	4A
Fuses Input (internal, replace.) Output (external)	500mA time lag 5A quick acting
Min. Switched Current/Voltage	10mA/10V
Maximum Dropout Time	50ms instantaneous
Indication LEDs	Red = Power On Green = K1 Closed Green = K2 Closed Green = Off Delay Closed
Impulse Withstand Voltage	2500V
Installation Group	C in accordance with VDE 0110
Pollution Degree	3
Operating Temperature	-10°C to +55°C (+14°F to +131°F)
Humidity	90% RH
Enclosure Protection	IP40, (NEMA 1), DIN 0470
Terminal Protection	IP20, DIN 0470
Conductor Size	1 x 2.5mm^2 (14AWG) stranded, 1 x 4mm^2 (12AWG) solid
Torque Settings—term. screws	1N·m (8.85lb·in)
Case Material	Red Polycarbonate
Mounting	35mm DIN rail
Weight	1054g (2.32lbs)
Electrical Life 220V AC/4A/880VA cosφ=0.35 220V AC/1.7A/375VA cosφ=0.6 30V DC/2A/60W 10V DC/0.01A/0.1W	 100,000 operations 500,000 operations 1,000,000 operations 2,000,000 operations
Mechanical Life	2,000,000 operations
Vibration	0.75mm (0.30in) peak, 10-55Hz
Shock	30g, 11ms half sine

❶ See Output Ratings on page 1-29 for details. Consult factory for ratings not shown.

Monitoring Safety Relays with Delayed Outputs

Minotaur MSR10D

Product Selection

Inputs	Safety Outputs	Auxiliary Outputs	Reset	Delayed Timing	Catalogue Number
2 N.C.	8 N.O. Instantaneous 1 N.O. Delayed	1 N.C. Instantaneous 1 N.C. Delayed	Monitored Manual	0.1 to 10s	**440R-G23029**
			Automatic/Manual	1 second fixed delay	**440R-G23067**
				0.5 second fixed delay	**440R-G23068**

Accessories

Description	Page Number	Catalogue Number
500mA Fuse	14-6	**440R-A31562**

Dimensions—mm (inches) Block Diagram

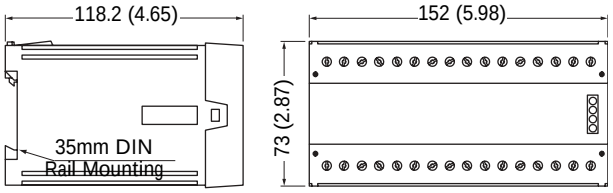

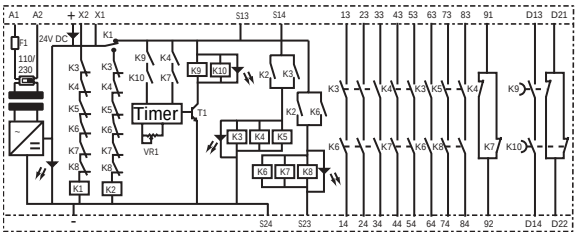

Typical Wiring Diagrams

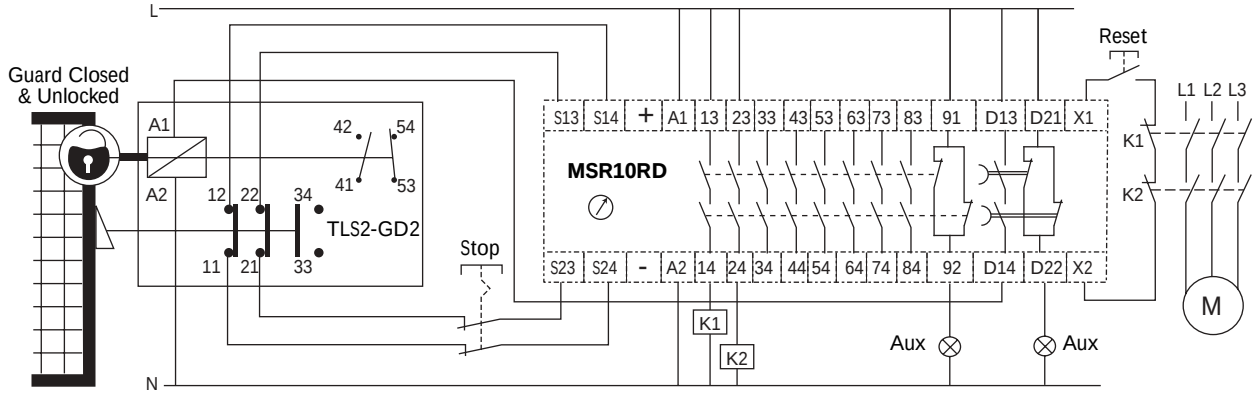

Dual Channel Guardlocking Safety Gate, Delayed Gate Release, Manual Reset, Dual Channel Output, Monitored Output

Application Details

