Final Control Elements

MINI-TOP ELECTRONIC ACTUATOR

(linear type; CC-Link)

Functions & Features

• Small-size control valve actuator
• Direct connection to CC-Link capable PLC and other devices on the same network
• Easy wired
• Uploading device information via CC-Link for maintenance purpose
• 1/1000 high resolution
• Easy adjustment: electronic limiter at the valve open & closed positions
• Overload protection
• Seal-spring incorporated for both directions; usable with three-way valves

Typical Applications

• For CP control valve in paper manufacturing
• Fuel mixing control for combustion control system
• Air conditioning for buildings and factories

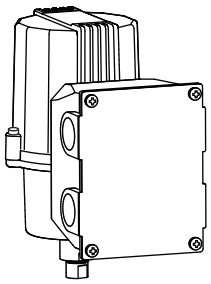

MODEL: MSP5C2–[1][2][3]–0R

ORDERING INFORMATION

• Code number: MSP5C2-[1][2][3]-0R
Specify a code from below for each of [1] through [3].
(e.g. MSP5C2-131-0R)

[1] STROKE

1: 5 to 10 mm (.20” to .39”)
3: 10 to 20 mm (.39” to .79”)

[2] OPERATION TIME, THRUST

3: 5 sec. / 10 mm, 150 N
4: 9 sec. / 10 mm, 300 N
7: 18 sec. / 10 mm, 700 N

[3] OUTPUT STEM TYPE

6: M6 female thread, 0.75 pitch
8: M8 female thread, 1.0 pitch
1: M10 female thread, 1.25 pitch
D: M6 female thread, 1.0 pitch
E: M8 female thread, 1.25 pitch
F: M10 female thread, 1.5 pitch

CE MARKING

0: Without

POWER INPUT

DC Power
R: 24 V DC
(Operational voltage range 24 V ±10 %, ripple 10 %p-p max.)

PACKAGE INCLUDES...

• Terminating resistor (110 Ω, 0.5 W)

GENERAL SPECIFICATIONS

Degree of protection: IP66
Operation at a communication error: Extend, retract or stop
Electrical connection: M3 screw terminals (torque 0.8 N·m)
Screw terminal: Nickel-plated steel
Transmission cable: Conforms to CC-Link Ver 1.10
Housing material: Diecast aluminum
(Cast aluminum for the terminal box; steel for the cover)
Drive: Stepping motor
Insulation class: E
Position detection: Potentiometer
Deadband: 0.1 – 1.9 % adjustable (factory set to 1.5 %)
Restarting timer: 0 – 10 sec. adjustable
(factory set to 1.5 sec.)
Isolation: Housing or FE1 to communication to power
Zero adjustment: 0 – 25 %
Span adjustment: 50 - 100 %
Protective functions: Overload protection
Status indicator LED: Red light blinks in 2 sec. intervals in normal operations; blinks in 0.5 sec. intervals when a foreign object is detected mechanically caught inside.
Manual operating handle: Not available

CC-Link COMMUNICATION

Protocol: CC-Link V1.10
Device type: Remote device station
Station No. setting: Rotary switch; 1 – 64
Required node: 1
Baud rate setting: Rotary switch
L RUN indicator: Red LED
L ERR. indicator: Red LED

INSTALLATION

Current consumption
•**DC**: Approx. 0.5 A
Operating temperature: -5 to +55°C (23 to 131°F)
Operating humidity: 30 to 85 %RH (non-condensing)
Vibration: 0.5 G (4.9 m/s^2) max.
Mounting position: All directions
Do not mount the actuator with its output stem or wiring conduit on the upside if the actuator is to be exposed to dripping water.
Weight: 1.8 kg (4.0 lb)

PERFORMANCE

Resolution: 1/1000 or 0.015 mm, whichever is greater, with 0.1 % deadband setting
Insulation resistance: ≥ 100 MΩ with 100 V DC
Dielectric strength: 100 V AC @ 1 minute
(housing or FE1 to communication to power)

COMMUNICATIONS

■MASTER to SLAVE

DATA TYPE	ADDRESS	FUNCTION	DETAIL
Bit	RY0	Forced Closed Position Input *1	0 : Disable 1 : Position = 0%
	RY1	Forced Open Position Input *1	0 : Disable 1 : Position = 100%
	RY2		
	RY3		
	RY4		
	RY5		
	RY6		
	RY7		
	RY8	Enable Target Position Input	0 : Disable 1 : Enable
	RY9		
	RYA	Reset Motor Deadlock Alarm	Motor deadlock alarm is cancelled when '1' is set.
	RYB	Clear Motor Starting Counter	Motor starting counter is reset to 0 when '1' is set.
	RYC	Clear Motor Reversing Counter	Motor reversing counter is reset to 0 when '1' is set.
	RYD	Clear Accumulated Running Distance	Accumulated running distance is reset to 0 when '1' is set.
	RYE		
	RYF		
Word	RWw0	Target Position Input	Signed, 0.01% increments (e.g. 100 = 1.00%) Valid only when Enable Target Position Input is enabled.
	RWw1		
	RWw2		
	RWw3		

*1. Valid regardless of the RY8 (Enable Target Position Input) status. Stopped when '1' is set both at RY0 and RY1.

■SLAVE to MASTER

DATA TYPE	ADDRESS	FUNCTION	DETAIL
Bit	RX0		
	RX1		
	RX2		
	RX3		
	RX4		
	RX5		
	RX6		
	RX7		
	RX8	Motor Deadlock Alarm	0 : Normal 1 : Overload or other deadlock alarm
	RX9	Target Position Input Error	0 : Normal 1 : Out of range from -0.5 to +100.5%
	RXA	System Error	0 : Normal 1 : Memory or other system error
	RXB	Control Status	0 : Remote (CC-Link) 1 : Manual
	RXC		
	RXD		
	RXE		
	RXF		
Word	RWr0	Position Output	Signed, 0.01% increments (e.g. 100 = 1.00%)
	RWr1	Motor Starting Counter *2	1 count per every 100 starting actions
	RWr2	Motor Reversing Counter *2	1 count per every 100 reversing actions
	RWr3	Accumulated Running Distance (%) *2	1 count per running 100% distance every time

*2. When the count reaches 65535, the value is held until it is reset.

EXTERNAL DIMENSIONS unit: mm (inch)

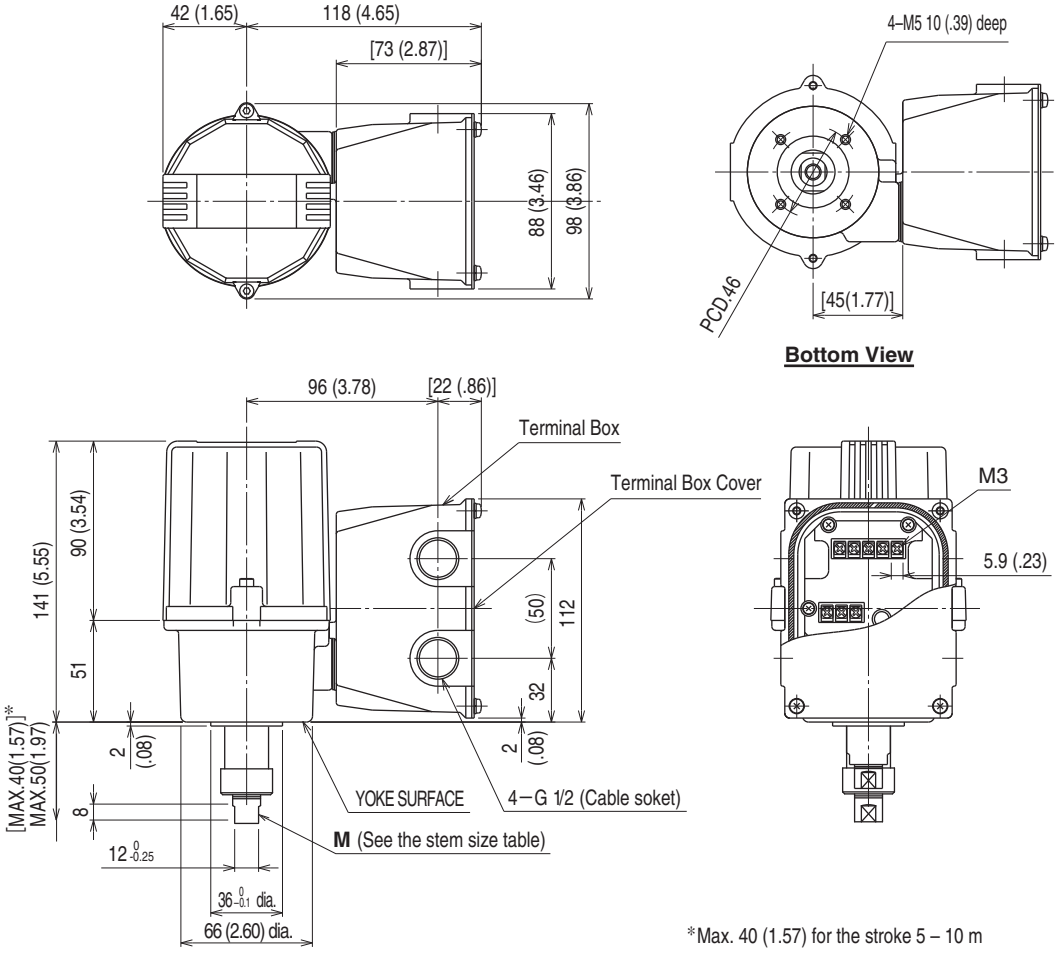

OUTPUT STEM HOLE SIZE **M**

CODE	DIA.	PITCH	DEPTH
6	M 6	0.75	
8	M 8	1.0	
1	M10	1.25	15
D	M 6	1.0	
E	M 8	1.25	
F	M10	1.5	

SCHEMATIC CIRCUITRY

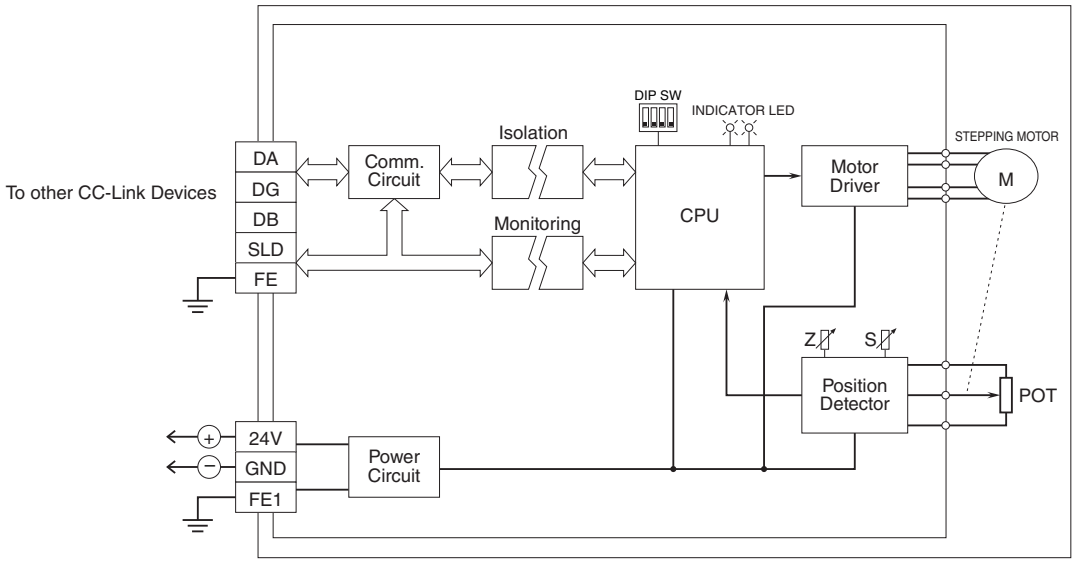

⚠ Specifications are subject to change without notice.

M-SYSTEM CO., LTD.
http://www.m-system.co.jp/