Thermal Characteristic

Thermal Resistance,Junction-to-Case (Note 2)	$R_{\theta JC}$	2.6	℃/W

Electrical Characteristics (T_C=25℃unless otherwise noted)

Parameter	Symbol	Condition	Min	Typ	Max	Unit
Off Characteristics						
Drain-Source Breakdown Voltage	BV_{DSS}	V_{GS}=0V I_D=250μA	600		-	V
Zero Gate Voltage Drain Current	I_{DSS}	V_{DS}=600V,V_{GS}=0V	-	-	1	μA
Gate-Body Leakage Current	I_{GSS}	V_{GS}=±30V,V_{DS}=0V	-	-	±100	nA
On Characteristics (Note 3)						
Gate Threshold Voltage	$V_{GS(th)}$	V_{DS}=V_{GS},I_D=250μA	2		4	V
Drain-Source On-State Resistance	$R_{DS(ON)}$	V_{GS}=10V, I_D=5.0A	-	1.1	1.3	Ω
Forward Transconductance	g_{FS}	V_{DS}=40V,I_D=3.5A	-	6.2	-	S
Dynamic Characteristics (Note4)						
Input Capacitance	C_{lss}	V_{DS}=25V,V_{GS}=0V, F=1.0MHz	-	1120	-	PF
Output Capacitance	C_{oss}		-	115	-	PF
Reverse Transfer Capacitance	C_{rss}		-	23	-	PF
Switching Characteristics (Note 4)						
Turn-on Delay Time	$t_{d(on)}$	V_{DD}=300V,I_D=7A,R_L=25Ω V_{GS}=10V,R_G=2.5Ω	-	30	-	nS
Turn-on Rise Time	t_r		-	80	-	nS
Turn-Off Delay Time	$t_{d(off)}$		-	125	-	nS
Turn-Off Fall Time	t_f		-	60	-	nS
Total Gate Charge	Q_g	V_{DS}=480V,I_D=7A, V_{GS}=10V	-	25		nC
Gate-Source Charge	Q_{gs}		-	6.0		nC
Gate-Drain Charge	Q_{gd}		-	10		nC
Drain-Source Diode Characteristics						
Diode Forward Voltage (Note 3)	V_{SD}	V_{GS}=0V,I_S=7.0A	-		1.4	V
Diode Forward Current (Note 2)	I_S		-	-	7.0	A
Reverse Recovery Time	t_{rr}	TJ = 25°C, IF = 7.0A di/dt = 100A/μs (Note3)	-	315		nS
Reverse Recovery Charge	Qrr		-	2.6		μC
Forward Turn-On Time	t_{on}	Intrinsic turn-on time is negligible (turn-on is dominated by LS+LD)				

Notes:

1. Repetitive Rating: Pulse width limited by maximum junction temperature.
2. Surface Mounted on FR4 Board, t ≤ 10 sec.
3. Pulse Test: Pulse Width ≤ 300μs, Duty Cycle ≤ 2%.
4. Guaranteed by design, not subject to production
5. E_{AS} condition: j=25℃,V_{DD}=50V,V_G=10V,L=0.5mH,Rg=25Ω

Typical Electrical and Thermal Characteristics (Curves)

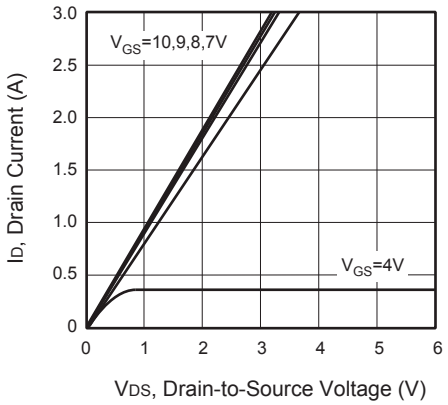

Figure 1. Output Characteristics

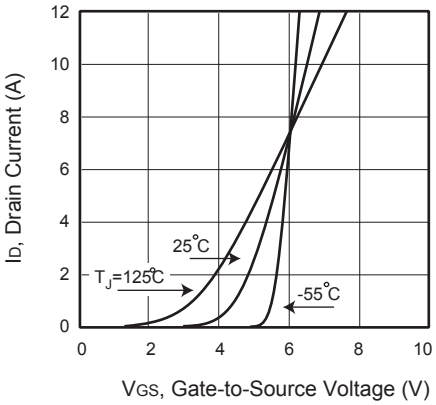

Figure 2. Transfer Characteristics

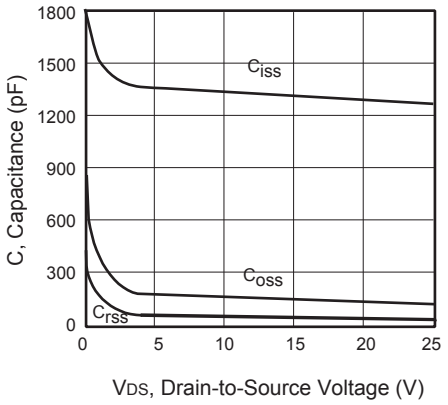

Figure 3. Capacitance

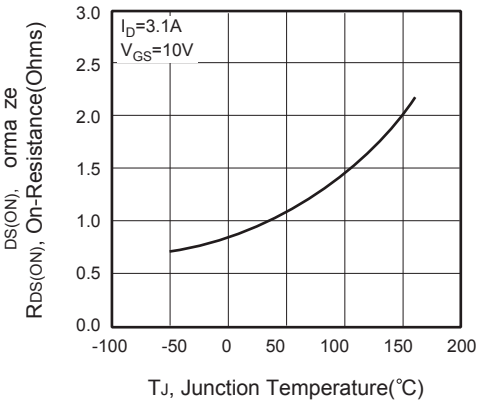

Figure 4. On-Resistance Variation with Temperature

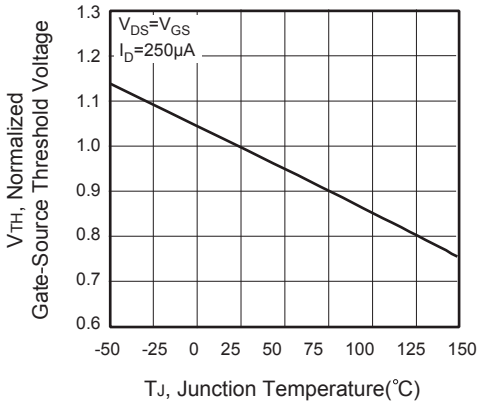

Figure 5. Gate Threshold Variation with Temperature

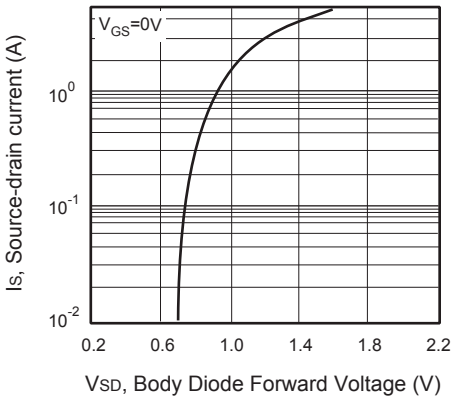

Figure 6. Body Diode Forward Voltage Variation with Source Current

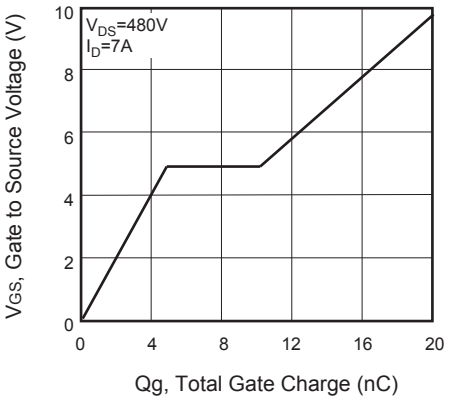

Figure 7. Gate Charge

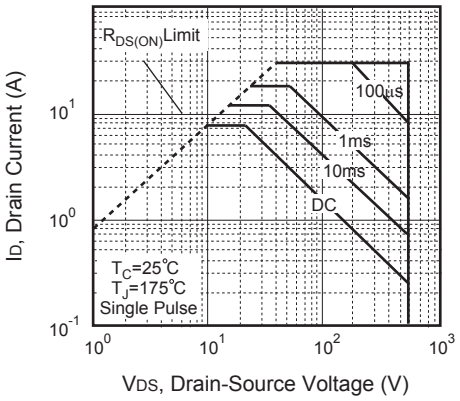

Figure 8. Maximum Safe Operating Area

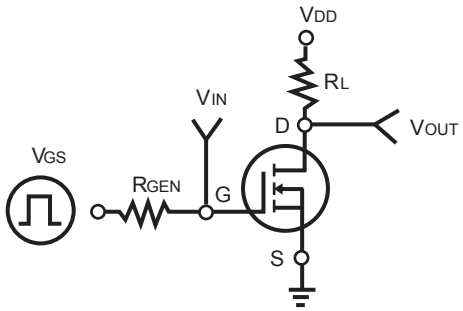

Figure 9. Switching Test Circuit

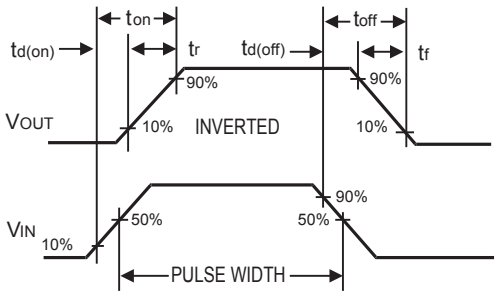

Figure 10. Switching Waveforms

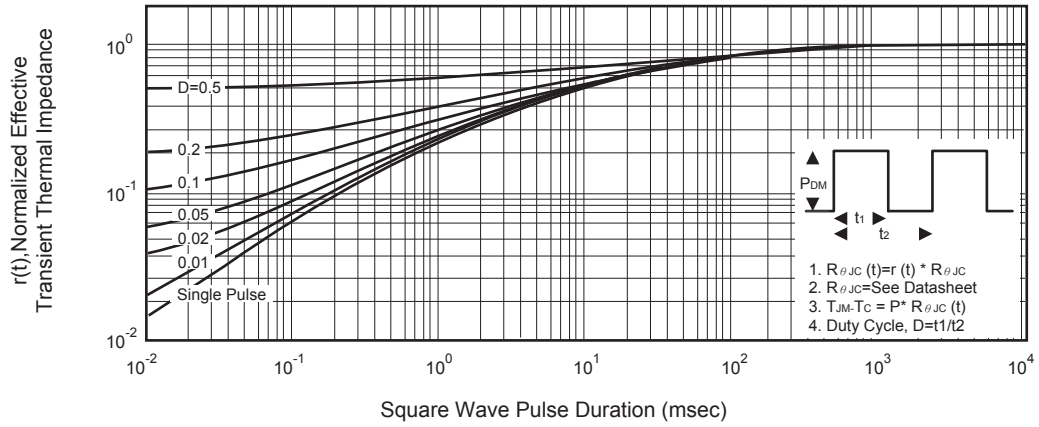

Figure 11. Normalized Thermal Transient Impedance Curve

TO-220F-3L Package Information

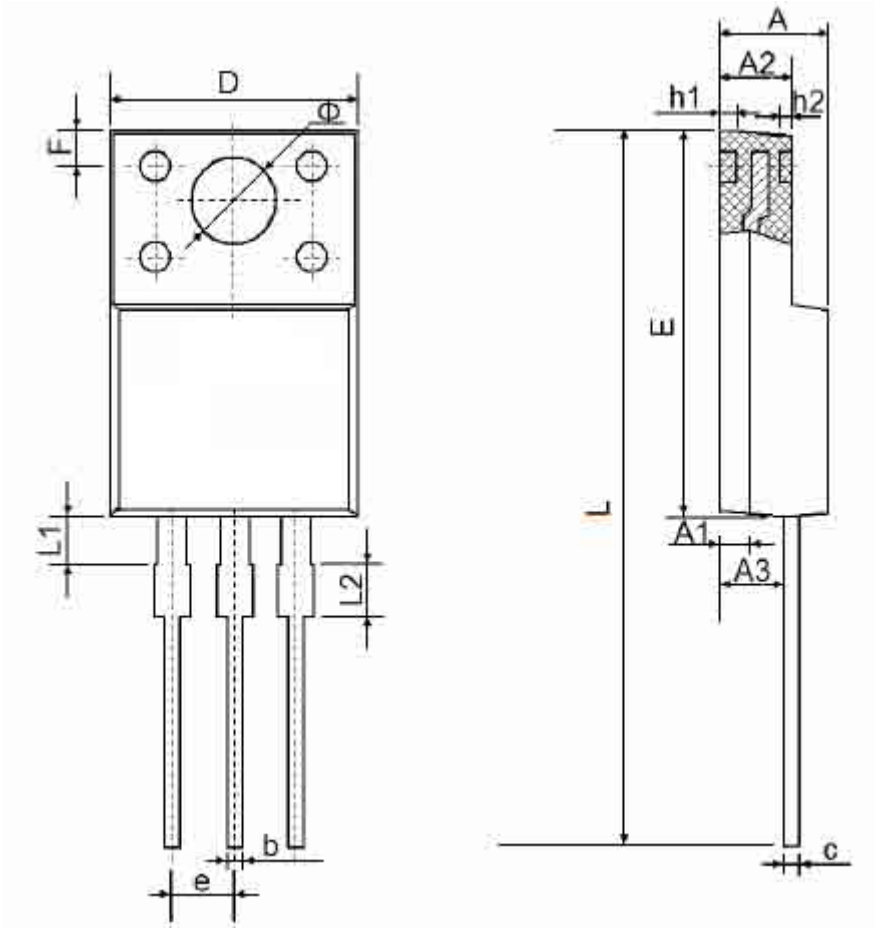

Symbol	Dimensions In Millimeters		Dimensions In Inches	
	Min.	Max.	Min.	Max.
A	4.300	4.700	0.169	0.185
A1	1.300REF		0.051REF	
A2	2.800	3.200	0.110	0.126
A3	2.500	2.900	0.098	0.114
b	0.500	0.750	0.020	0.030
b1	1.100	1.350	0.043	0.053
b2	1.500	1.750	0.059	0.069
c	0.500	0.750	0.020	0.030
D	9.960	10.360	0.392	0.408
E	14.800	15.200	0.583	0.598
e	2.540TYP.		0.100TYP	
F	2.700REF		0.106REF	
Φ	3.500REF		0.138REF	
h1	0.800REF		0.031REF	
h2	0.500REF		0.020REF	
L	28.000	28.400	1.102	1.118
L1	1.700	1.900	0.067	0.075
L2	1.900	2.100	0.075	0.083