Discontinued Product

OKI Semiconductor

This version: Feb. 1999
Previous version: May. 1997

MSM6586

262,144-Word x 1-Bit Serial Register

GENERAL DESCRIPTION

The MSM6586 is a serial register in 262,144 words x 1 bit configuration featuring medium speed operation with low power consumption.

The MSM6586 has a built-in internal address generator circuit allowing continuous serial read/write operation by external clock input. The internal address is automatically incremented or decremented by one by read/write operation. Address increment or decrement can be selected by external input.

Address designation in units of 1024 words in the direction of words is possible by an external serial address input.

A refresh timer and refresh counter are built in to eliminate the need of the external refresh circuit and to realize low power consumption.

18-pin plastic QFJ (PLCC) is used as the package and the operating temperature range is between 0°C and 70°C.

The MSM6586 is suitable for storing large capacity data with battery backup. A solid state recording and playback system can easily be constructed in combination with OKI's voice synthesizer ICs.

FEATURES

- Configuration : 262,144 x 1 bit
- Serial access operation
  - Serial access time : 1.5 µs (3.0 µs)
  - Serial read/write cycle time : 2.0 µs (4.0 µs)
  - Fast mode read/write cycle time : 0.4 µs (0.4 µs)
  - Times in parentheses indicate ones in self-refresh mode.
- Low current consumption : 100 µA max. (for data holding, V_{CC} = 4.0 V)
- Wide operating supply voltage range : Single 3.5 to 5.5 V
- Auto-refresh/self-refresh changeable
- Package:
  18-pin plastic QFJ (PLCC) (QFJ18-P-R290-1.27) (Product name : MSM6586JS)

BLOCK DIAGRAM

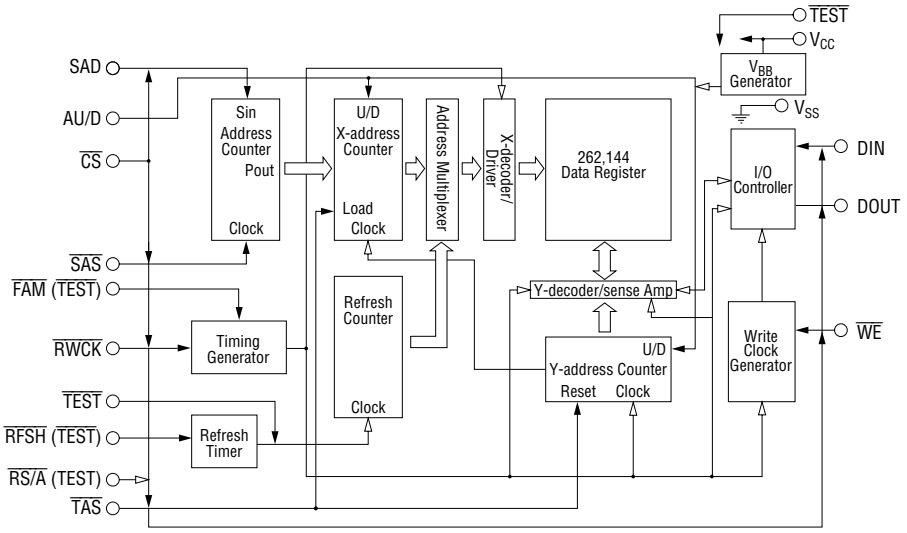

PIN CONFIGURATION (TOP VIEW)

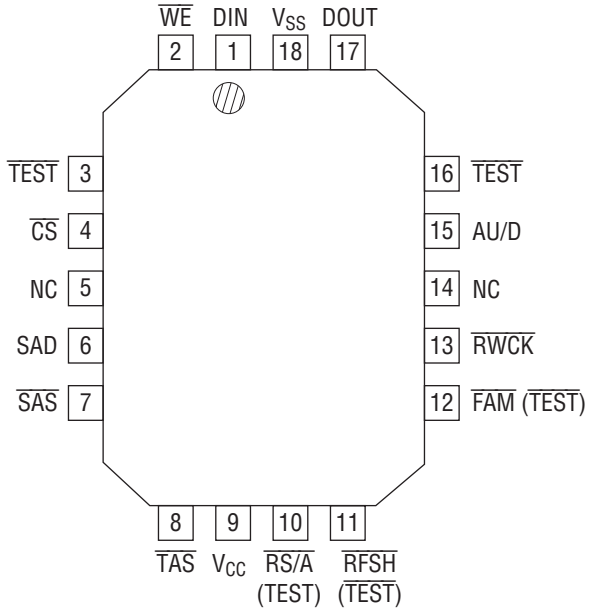

NC : No connection

18-Pin Plastic QFJ

PIN DESCRIPTIONS

Pin	Symbol	Description
1	DIN	Data input
2	$\overline{WE}$	Write enable
3, 16	$\overline{TEST}$	Test input
4	$\overline{CS}$	Chip select
6	SAD	Serial address data
7	$\overline{SAS}$	Serial address strobe
8	$\overline{TAS}$	Transfer address strobe
9	V_{CC}	Power supply (+5V)
10	$\overline{RS/A}$ (TEST)	Self-refresh/auto-refresh select (Test input)
11	$\overline{RFSH}$ ($\overline{TEST}$)	Refresh clock input (Test input)
12	$\overline{FAM}$ ($\overline{TEST}$)	Fast access mode select (Test input)
13	$\overline{RWCK}$	Read/write clock
15	AU/D	Address up/down select
17	DOUT	Data output
18	V_{SS}	Ground (0V)

ABSOLUTE MAXIMUM RATINGS

Parameter	Symbol	Condition	Rating	Unit
Terminal Voltage	V_T	Ta = 25°C, relative to V_{SS}	–1.0 to +7.0	V
Output Short-Circuit Current	I_{OS}	Ta = 25°C	50	mA
Power Dissipation	P_D	Ta = 25°C	1	W
Operating Temperature	T_{op}	—	0 to 70	°C
Storage Temperature	T_{STG}	—	–55 to +150	°C

RECOMMENDED OPERATING CONDITIONS

(Ta = 0 to 70°C)

Parameter	Symbol	Min.	Typ.	Max.	Unit
Supply Voltage	V_{CC}	3.5	5.0	5.5	V
Supply Voltage	V_{SS}	0	0	0	V
"H" Input Voltage	V_{IH}	V_{CC} – 0.5	V_{CC}	V_{CC} + 0.5	V
"L" Input Voltage	V_{IL}	–0.5	0	+0.5	V

ELECTRICAL CHARACTERISTICS

DC Characteristics

(V_{CC} = 3.5V to 5.5V, Ta = 0 to 70°C)

Parameter	Symbol	Condition	Min.	Max.	Unit
"H" Output Voltage	V_{OH}	I_{OH} = –0.5mA	V_{CC} – 0.5	—	V
"L" Output Voltage	V_{OL}	I_{OL} = 0.5mA	—	0.4	V
Input Leakage Current	I_{LI}	V_I = 0V to V_{CC}	–1	+1	µA
Output Leakage Current	I_{LO}	V_O = 0V to V_{CC}	–1	+1	µA
Supply Current (in operating state)	I_{CC1}	V_{CC} = 4V, t_{RWC} = 2µs	—	5	mA
Supply Current (in standby state)	I_{CC2}	V_{CC} = 4V	—	100	µA
Supply Current (FAM)	I_{CC3}	V_{CC} = 4V, t_{RWC} = 0.4µs	—	15	mA

AC Characteristics

(V_{CC} = 3.5V to 5.5V, Ta = 0 to 70°C)

Parameter	Symbol	MSM6586-SELF		MSM6586-AUTO		Unit
		Min.	Max.	Min.	Max.	
Refresh Cycle	t_{REF}	—	—	—	100	ms
Read/Write Cycle Time	t_{RWC}	4,000	—	2,000	—	ns
Access Time	t_{ACC}	—	3,000	—	1500	ns
Output Turn-off Delay Time	t_{OFF}	0	50	0	50	ns
Input Signal Rise/Fall Time	t_T	3	50	3	50	ns
$\overline{RWCK}$ Precharge Time	t_{RWP}	1,000	—	500	—	ns
$\overline{RWCK}$ Pulse Width	t_{RW}	3,000	10,000	1,500	10,000	ns
$\overline{SAS}$ Cycle Time	t_{SSC}	100	—	100	—	ns
$\overline{SAS}$ Pulse Width	t_{SAS}	50	—	50	—	ns
$\overline{SAS}$ Precharge Time	t_{SAP}	50	—	50	—	ns
Address Setup Time	t_{AS}	0	—	0	—	ns
Address Hold Time	t_{AH}	50	—	50	—	ns
$\overline{TAS}$ Setup Time	t_{ATS}	50	—	50	—	ns
$\overline{TAS}$ to $\overline{RWCK}$ Setup Time	t_{TRS}	50	—	50	—	ns
$\overline{TAS}$ Pulse Width	t_{TAS}	50	—	50	—	ns
Read Command Setup Time	t_{RRS}	0	—	0	—	ns
Read Command Hold Time	t_{RRH}	250	—	250	—	ns
Write Command Setup Time	t_{WRS}	0	—	0	—	ns
Write Command Hold Time	t_{WRH}	50	—	50	—	ns
Write Command Pulse Width	t_{WP}	50	—	50	—	ns
$\overline{WE}$ to $\overline{RWCK}$ Lead Time	t_{RWL}	50	—	50	—	ns
Data Setup Time	t_{DS}	0	—	0	—	ns
Data Hold Time	t_{DH}	50	—	50	—	ns
$\overline{RWCK}$ to $\overline{WE}$ Delay Time	t_{RWD}	100	—	100	—	ns
AU/D Setup Time	t_{UDS}	0	—	0	—	ns
AU/D Hold Time	t_{UDH}	50	—	50	—	ns
AU/D to $\overline{TAS}$ Setup Time	t_{UDTS}	0	—	0	—	ns
$\overline{RFSH}$ Setup Time	t_{RFS}	—	—	500	—	ns
$\overline{RFSH}$ Precharge Time	t_{RFP}	—	—	500	—	ns
$\overline{RFSH}$ Pulse Width	t_{RF}	—	—	1,500	10,000	ns
$\overline{RFSH}$ $\overline{RWCK}$ Precharge Time	t_{RRP}	—	—	500	—	ns
Fast $\overline{RWCK}$ Mode Cycle	t_{FC}	400	—	400	—	ns
Fast Mode Access Time	t_{FAC}	—	300	—	300	ns
Fast $\overline{RWCK}$ Precharge Time	t_{FCP}	100	—	100	—	ns
Fast Mode $\overline{RWCK}$ Pulse Width	t_{FR}	300	—	300	—	ns
Fast Mode Setup Time	t_{FS}	0	—	0	—	ns
Fast Mode Hold Time	t_{FH}	50	—	50	—	ns

AC Characteristics (Continued)

Parameter	Symbol	MSM6586-SELF		MSM6586-AUTO		Unit
		Min.	Max.	Min.	Max.	
Fast Mode Width	t_{FCC}	4,000	100,000	2,000	100,000	ns
Slow Mode Setup Time	t_{SS}	0	—	0	—	ns
Slow Mode Hold Time	t_{SH}	50	—	50	—	ns

Note: 1. Up/down switching for internal addresses is not available in fast mode.
2. Switching to the fast mode should be made satisfying the timings of t_{FS} and t_{SS} at the "L" level of RWCK.

TIMING DIAGRAMS

Read/Write/Read Modify Write Cycle

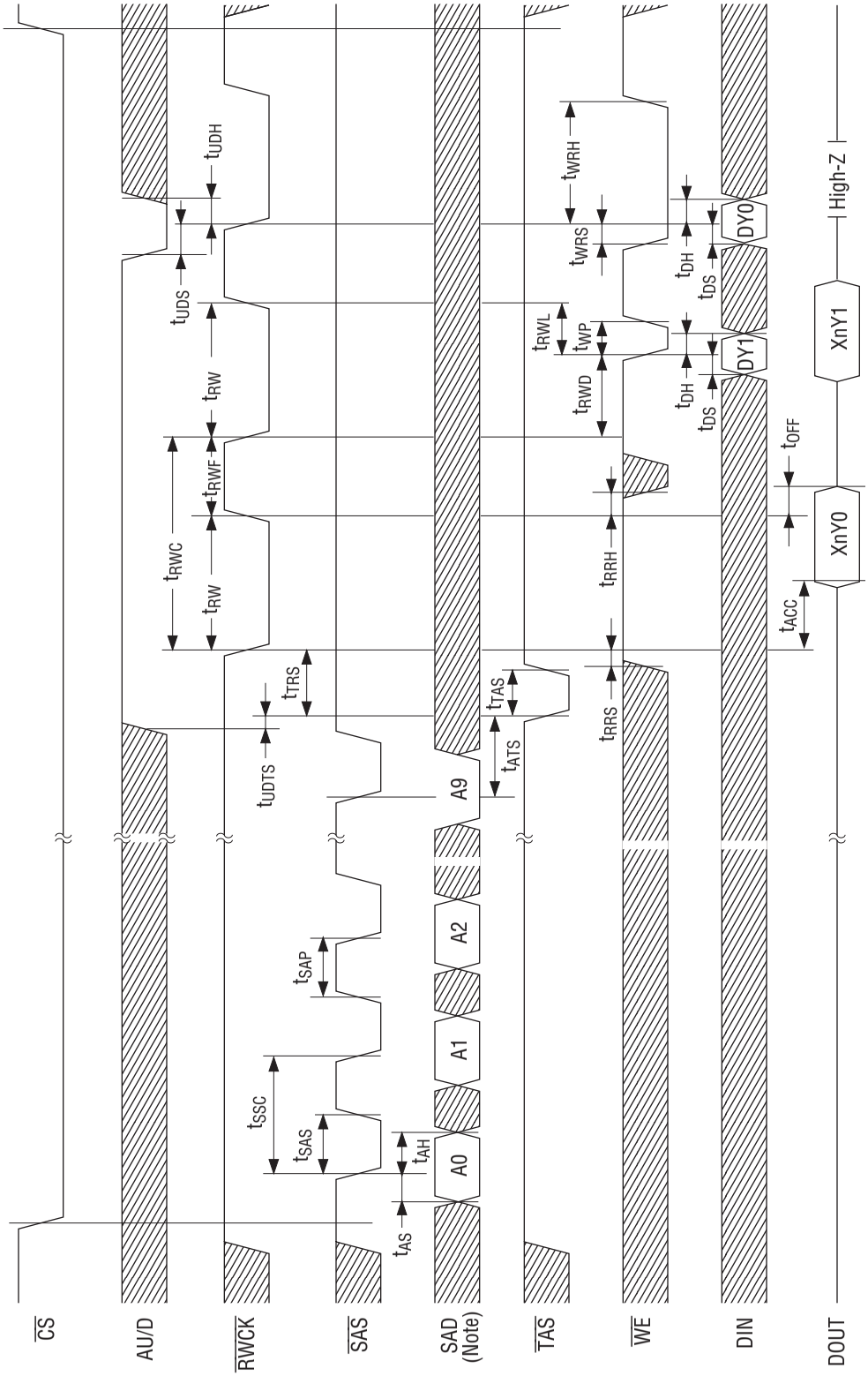

Note: Out of ten bits from A0 to A9, only the eight bits from A0 to A7 are effective. Fix A8 and A9 to "L".

Address Up/Down Select Mode

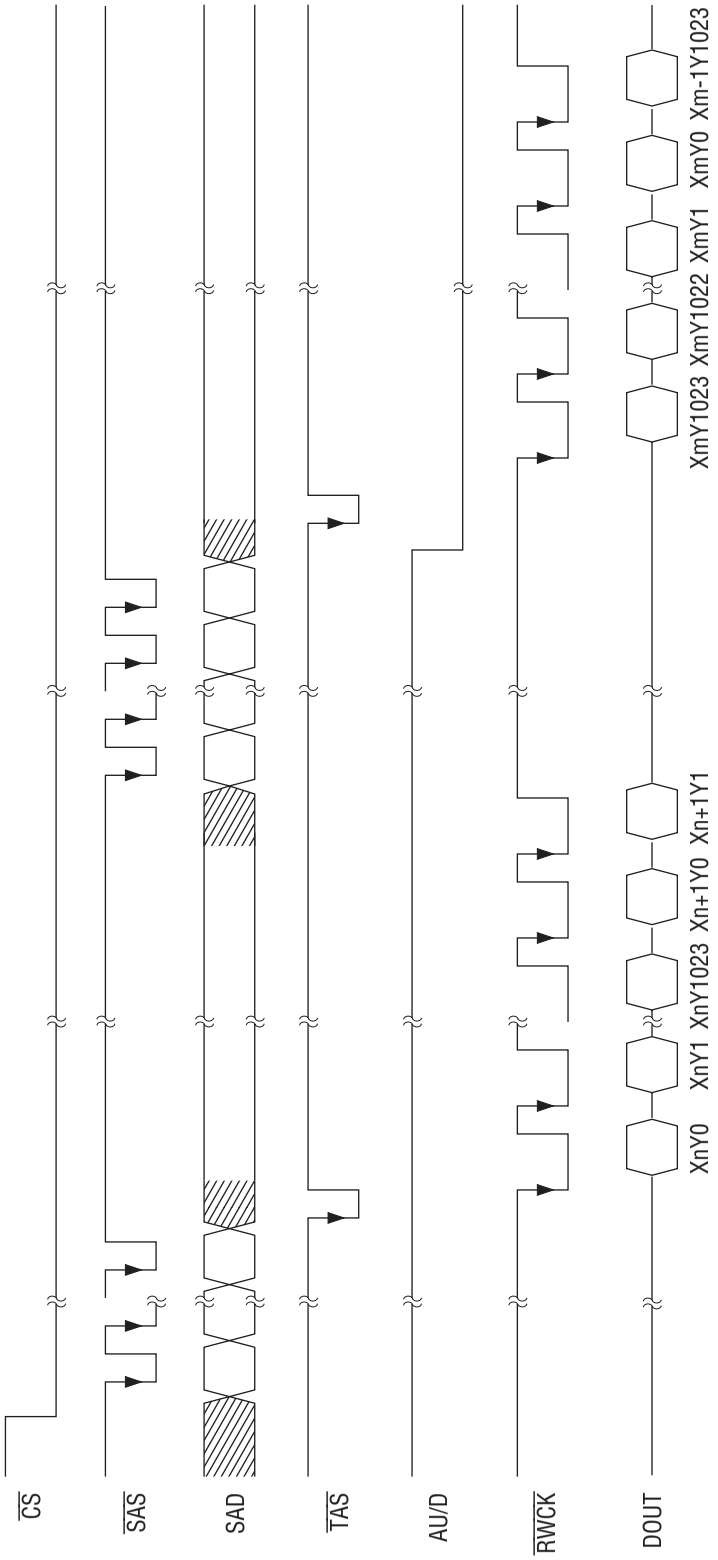

Auto-Refresh Mode

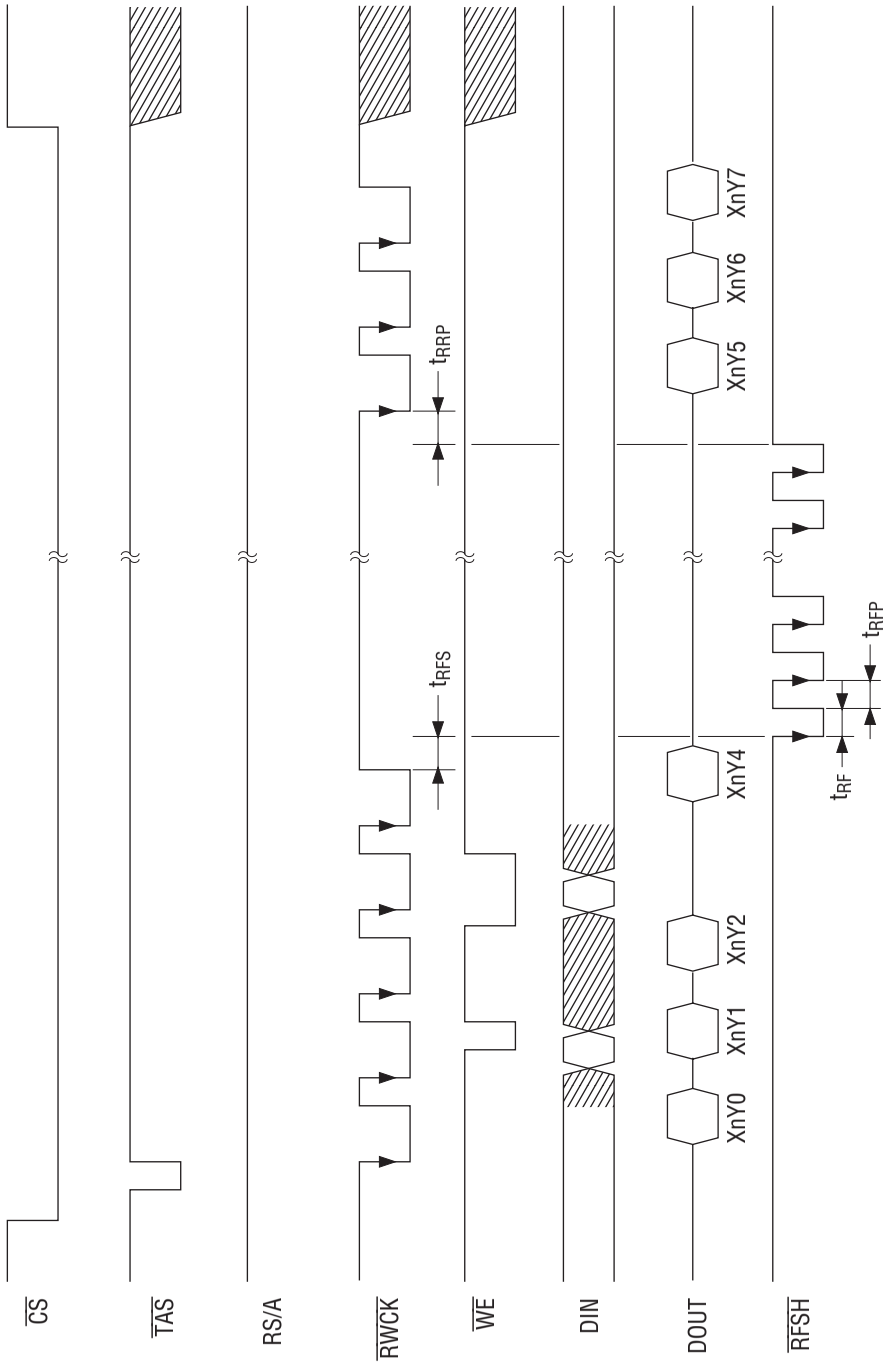

Fast Access Mode

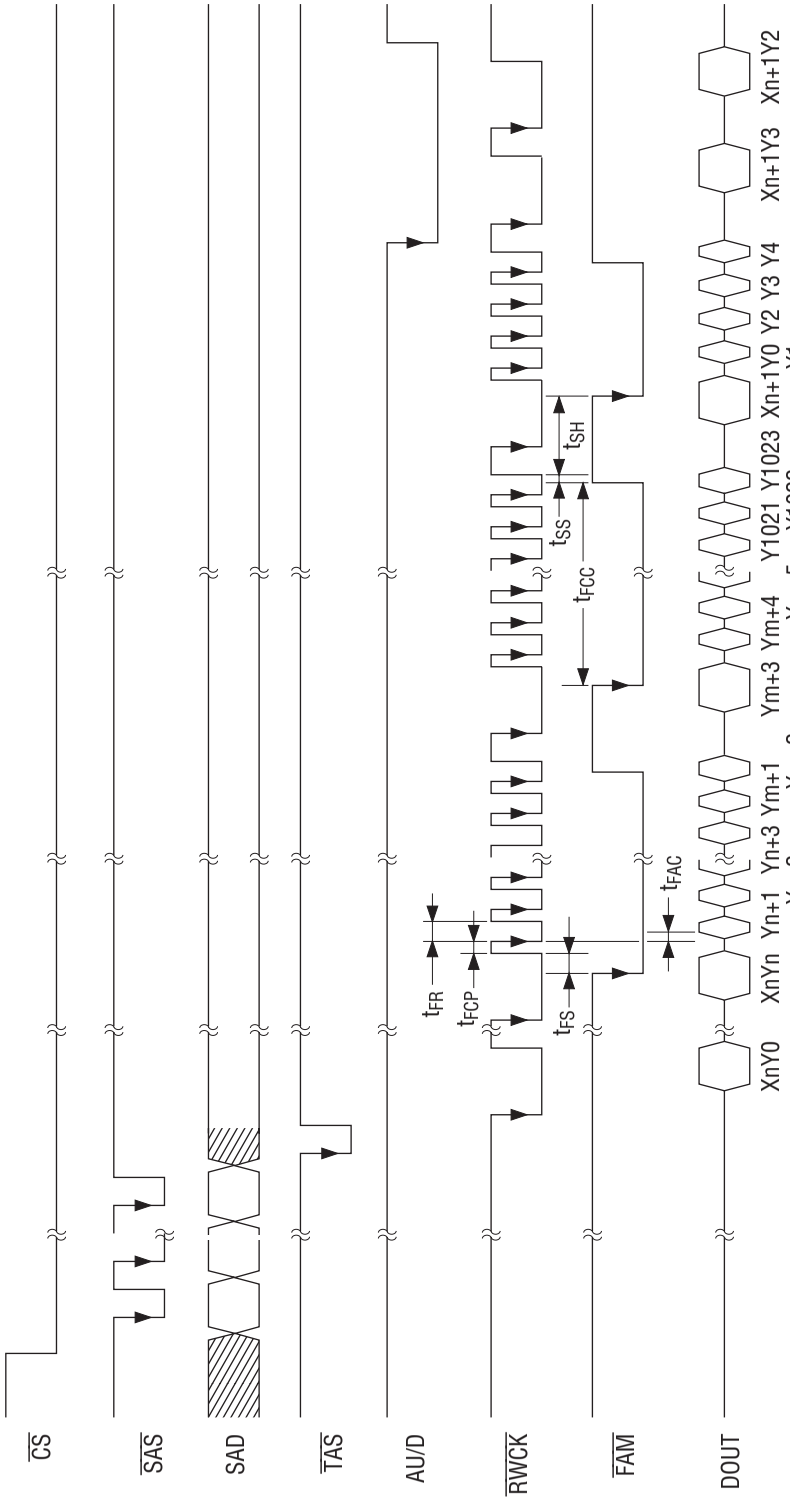

FUNCTIONAL DESCRIPTION

Serial Address Input (SAD)

Pin for inputting the read/write starting address. Designation in units of 1024 words is possible. The 512 address data can be input as 10-bit (A0-A9) serial from the SAD pin. (A0-A7 has enable address, A8 and A9 keep "L".)

Serial Address Strobe ($\overline{SAS}$)

Pin for the clock used to store the serial address data into the internal register.

Address Transfer Strobe ($\overline{TAS}$)

Input pin for setting the serial address data stored in the address register to the internal address counter.
When the $\overline{TAS}$ falls, and the Y address is set to address 0 in the increment mode or to address 1023 in the decrement mode.

Read/Write Clock ($\overline{RWCK}$)

Input pin for the data register information read/write clock.
Internal operation starts at the falling edge of $\overline{RWCK}$. The information in the data register is output to the DOUT pin in the read mode, and the information at the DIN pin is written into the data register in the write mode. The internal address counter is automatically incremented or decremented also when $\overline{RWCK}$ falls.

Write Enable ($\overline{WE}$)

Input pin for selecting the read mode, write mode or read modify write mode.
The read mode is set when $\overline{WE}$ is "H", and the write mode is set when $\overline{WE}$ is "L". When $\overline{WE}$ falls from "H" to "L" while $\overline{RWCK}$ is active, the read modify write mode is set.

Data Input (DIN)

Input pin for write data.
The information at the data input pin is stored at the falling edge of $\overline{RWCK}$ in the write mode, and at the falling edge of $\overline{WE}$ in the modify write mode.

Data Output (DOUT)

The data output pin is always kept in the high impedance state when $\overline{RWCK}$ or $\overline{CS}$ is kept at "H". When "H" or "L" information is read in the read operation, the output pin is set to "H" or "L" and holds the read information until $\overline{RWCK}$ is again set to "H". In the early write mode the output pin maintains the high impedance state, so I/O common operation by connecting DIN and DOUT is possible.

Address Up/Down Select (AU/D)
Input pin for selecting the direction of automatic address updating.
When the $\overline{TAS}$ signal is input with the AU/D pin set to "H", the internal address counters are set to the externally set address for X and to address 0 for Y. Then the address is incremented by 1 every time $\overline{RWCK}$ is input.
When the $\overline{TAS}$ signal is input with the AU/D pin set to "L", the internal address counters are set to the externally set address in the same way for X but set to address 1023 for Y.
Then the address is decremented by 1 every time $\overline{RWCK}$ is input. In either case, the X address is automatically incremented or decremented by 1 when read/write operation for 1024 words ends.
The AU/D pin setting change is possible in any read/write cycle so long as the timing specifications for t_{UDS}, t_{UDH} are satisfied.

Chip Select ($\overline{CS}$)
Input pin for disabling all input and output pins. This pin enables parallel use of multiple MSM6586s by connecting the data input and output pins.

Self/Auto Refresh Select ($\overline{RS/A}$ (TEST))
Pin for selecting a refresh mode in order to retain memory cell data.
If the $\overline{RS/A}$ pin is set to "L" level, the self-refresh mode is selected and no external refresh control is required. If the $\overline{RS/A}$ pin is set to "H" level, the auto-refresh mode is selected and refresh operation is required to retain memory cell data.

Refresh Clock Input ($\overline{RFSH}$ ($\overline{TEST}$))
Input pin for controlling the external refresh when the auto refresh mode is selected.
When the auto-refresh mode is selected, 1024 refresh operations are required within 100ms via the $\overline{RFSH}$ pin while the $\overline{RWCK}$ is at "H" level.

Fast Access Mode Select ($\overline{FAM}$ ($\overline{TEST}$))
Pin for fast read/write operations.
Fast read/write is possible by keeping the $\overline{FAM}$ pin at "L" level. The fast access mode is set or released by inputting "L" level or "H" level to the $\overline{FAM}$ pin when the $\overline{RWCK}$ pin is at "L" level, and when t_{FS} and t_{SS} are satisfied.
When 1024-word data access is complete, be sure to insert a normal cycle in order to increment or decrement the X address.
When the fast access mode is set, the address increment/decrement switching with the AU/D pin is not available.

Test (TEST, $\overline{TEST}$)
The TEST pin is fixed to "L" level.
The $\overline{TEST}$ pin is fixed to "H" level.

PACKAGE DIMENSIONS

(Unit : mm)

QFJ18-P-R290-1.27

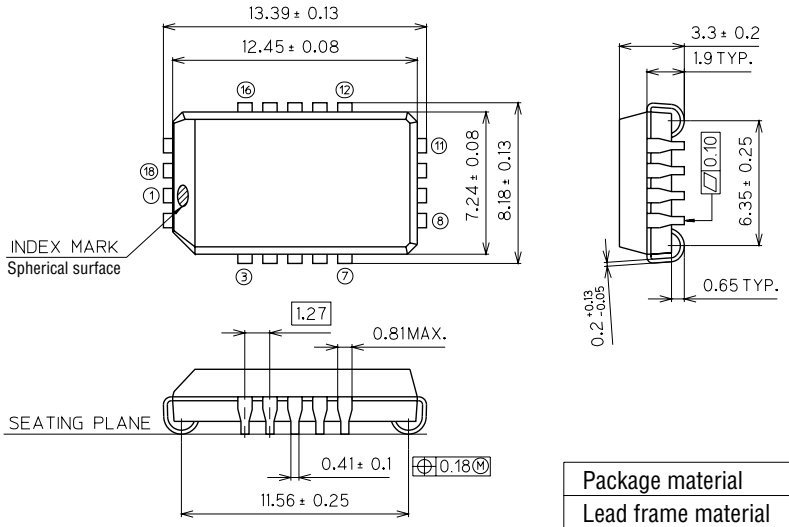

Package material	Epoxy resin
Lead frame material	42 alloy
Pin treatment	Solder plating
Solder plate thickness	5 μm or more
Package weight (g)	0.50 TYP.

Notes for Mounting the Surface Mount Type Package

The SOP, QFP, TSOP, TQFP, LQFP, SOJ, QFJ (PLCC), SHP, and BGA are surface mount type packages, which are very susceptible to heat in reflow mounting and humidity absorbed in storage. Therefore, before you perform reflow mounting, contact Oki's responsible sales person on the product name, package name, pin number, package code and desired mounting conditions (reflow method, temperature and times).

NOTICE

1. The information contained herein can change without notice owing to product and/or technical improvements. Before using the product, please make sure that the information being referred to is up-to-date.

2. The outline of action and examples for application circuits described herein have been chosen as an explanation for the standard action and performance of the product. When planning to use the product, please ensure that the external conditions are reflected in the actual circuit, assembly, and program designs.

3. When designing your product, please use our product below the specified maximum ratings and within the specified operating ranges including, but not limited to, operating voltage, power dissipation, and operating temperature.

4. Oki assumes no responsibility or liability whatsoever for any failure or unusual or unexpected operation resulting from misuse, neglect, improper installation, repair, alteration or accident, improper handling, or unusual physical or electrical stress including, but not limited to, exposure to parameters beyond the specified maximum ratings or operation outside the specified operating range.

5. Neither indemnity against nor license of a third party's industrial and intellectual property right, etc. is granted by us in connection with the use of the product and/or the information and drawings contained herein. No responsibility is assumed by us for any infringement of a third party's right which may result from the use thereof.

6. The products listed in this document are intended for use in general electronics equipment for commercial applications (e.g., office automation, communication equipment, measurement equipment, consumer electronics, etc.). These products are not authorized for use in any system or application that requires special or enhanced quality and reliability characteristics nor in any system or application where the failure of such system or application may result in the loss or damage of property, or death or injury to humans. Such applications include, but are not limited to, traffic and automotive equipment, safety devices, aerospace equipment, nuclear power control, medical equipment, and life-support systems.

7. Certain products in this document may need government approval before they can be exported to particular countries. The purchaser assumes the responsibility of determining the legality of export of these products and will take appropriate and necessary steps at their own expense for these.

8. No part of the contents cotained herein may be reprinted or reproduced without our prior permission.

9. MS-DOS is a registered trademark of Microsoft Corporation.

Copyright 1999 Oki Electric Industry Co., Ltd.

Printed in Japan