OKI Semiconductor

This version: Sep. 1998
Previous version: Mar. 1996

MSM63P180

4-Bit Microcontroller with Built-in 16K Word PROM and 1024-Dot Matrix LCD Drivers

GENERAL DESCRIPTION

The MSM63P180 is an M6318x series one-time-programmable ROM version product of OLMS-63K family, which employs Oki's original CPU core nX-4/250.
The MSM63P180 has one-time PROM as internal program memory.
The MSM63188 and other mask ROM-version products have mask ROM as internal program memory.
The specifications of the MSM63P180 are equal to those of the MSM63188 except for electrical characteristics, packaging, and some functions.
The MSM63P180 is used for evaluating the software development of M6318x series products.

FEATURES

- Rich instruction set
  439 instructions
  Transfer, rotate, increment/decrement, arithmetic operations, comparison, logic operations, mask operations, bit operations, ROM table reference, external memory transfer, stack operations, flag operations, branch, conditional branch, call/return, control.

- Rich selection of addressing modes
  Indirect addressing of four data memory types, with current bank register, extra bank register, HL register and XY register.
  Data memory bank internal direct addressing mode.

- Processing speed
  Two clocks per machine cycle, with most instructions executed in one machine cycle.
  Minimum instruction execution time : 61 µs (@ 32.768 kHz system clock)
  1 µs (@ 2 MHz system clock)

- Clock generation circuit
  Low-speed clock : 32.768 kHz crystal oscillator
  High-speed clock : 2 MHz (Max.) RC or ceramic oscillator select

- Program memory space
  16K words (PROM)
  Basic instruction length is 16 bits/1 word

- Data memory space
  3584 nibbles

- External data memory space
  64 Kbytes (expandable by using an I/O port)

• Stack level
  Call stack level : 16 levels
  Register stack level : 16 levels

• I/O ports
  Input ports: Selectable as input with pull-up resistance/input with pull-down resistance/high-impedance input
  Output ports: Selectable as P-channel open drain output/N-channel open drain output/CMOS output
  Input-output ports: Selectable as input with pull-up resistance/input with pull-down resistance/high-impedance input
  Selectable as P-channel open drain output/N-channel open drain output/CMOS output
  Can be interfaced with external peripherals that use a different power supply than this device uses.
  Number of ports:
  Input port : 2 ports × 4 bits
  Output port : 6 ports × 4 bits
  Input-output port : 8 ports × 4 bits

• Buzzer function
  Buzzer output : 0.946 to 5.461 kHz (adjustable in 15 steps)
  Buzzer output modes : Intermittent sound 1, 2; simple sound; continuous sound

• Melody output function
  Melody sound frequency : 529 to 2979 Hz
  Tone length : 63 types
  Tempo : 15 types
  Note data : Resides in the program memory

• LCD driver
  Number of segments : 1024 Max. (64 SEG × 16 COM)
  1/1 to 1/16 duty
  1/4 or 1/5 bias (regulator built-in)
  Selectable as all-on mode/all-off mode/power down mode/normal display mode
  Adjustable contrast

• Multiplier/divider circuits
  Multiplier : (8 bits) × (8 bits) → Product (16 bits)
  Divider : (16 bits) ÷ (8 bits) → Quotient (16 bits), Remainder (8 bits)

• Reset function
  Reset through RESET pin
  Power-on reset
  Reset by low-speed oscillation halt

• Battery check
  Low-voltage supply check
  Criterion voltage : Selectable as 2.2 V or 2.8 V

- Power supply backup
  Backup circuit (voltage multiplier) enables operation at 1.45 V minimum

- Timers and counter
  8-bit timer × 4
    Selectable as auto-reload mode/capture mode/clock frequency measurement mode
  Watchdog timer × 1
    Overflows in 2 sec.
  100 Hz timer × 1
    Measurable in steps of 1/100 sec.
  15-bit time base counter × 1
    1, 2, 4, 8, 16, 32, 64, and 128 Hz signals can be read

- Time base capture function
  Captures the time base counter output values (32, 64, 128, and 256 Hz) upon the rise (fall) of P1.0 and P1.1

- Serial port

Mode	:	UART mode, synchronous mode
UART communication speed	:	1200 bps, 2400 bps, 4800 bps, 9600 bps
Clock frequency in synchronous mode	:	32.768 kHz (internal clock mode), external clock frequency
Data length	:	5 to 8 bits

- Shift register

Shift clock	:	1x or 1/2x system clock, timer 1 overflow, external clock
Data length	:	8 bits

- Interrupt sources

External interrupt	:	6
Internal interrupt	:	14 (watchdog timer interrupt is a nonmaskable interrupt)

- Operating voltage

When backup used	:	V_{DD} = 1.45 to 2.7 V
When backup not used	:	V_{DD} = 2.7 to 5.5 V

- Package:
  176-pin plastic LQFP (LQFP176-P-2424-0.50-BK)

Product name	:	MSM63P180-xxxGS-BK (written PROM) MSM63P180-NGS-BK (blanked PROM) xxx indicates a code number.

BLOCK DIAGRAM

An asterisk (*) indicates the port secondary function. ⬚ indicates that the power is supplied to the circuits corresponding to the signal names inside ⬚ from V_{DDI} (power supply for interface).

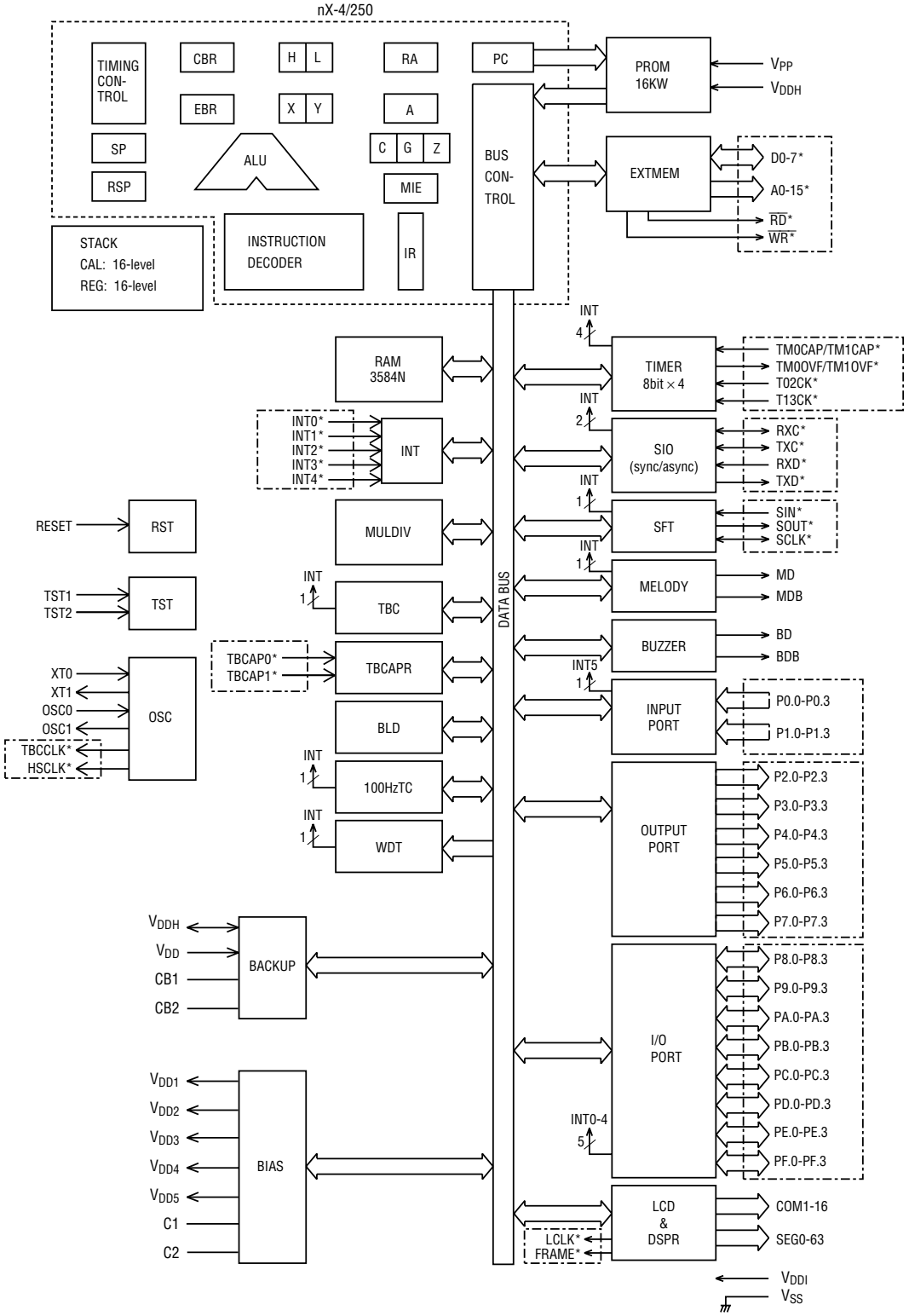

PIN CONFIGURATION (TOP VIEW)

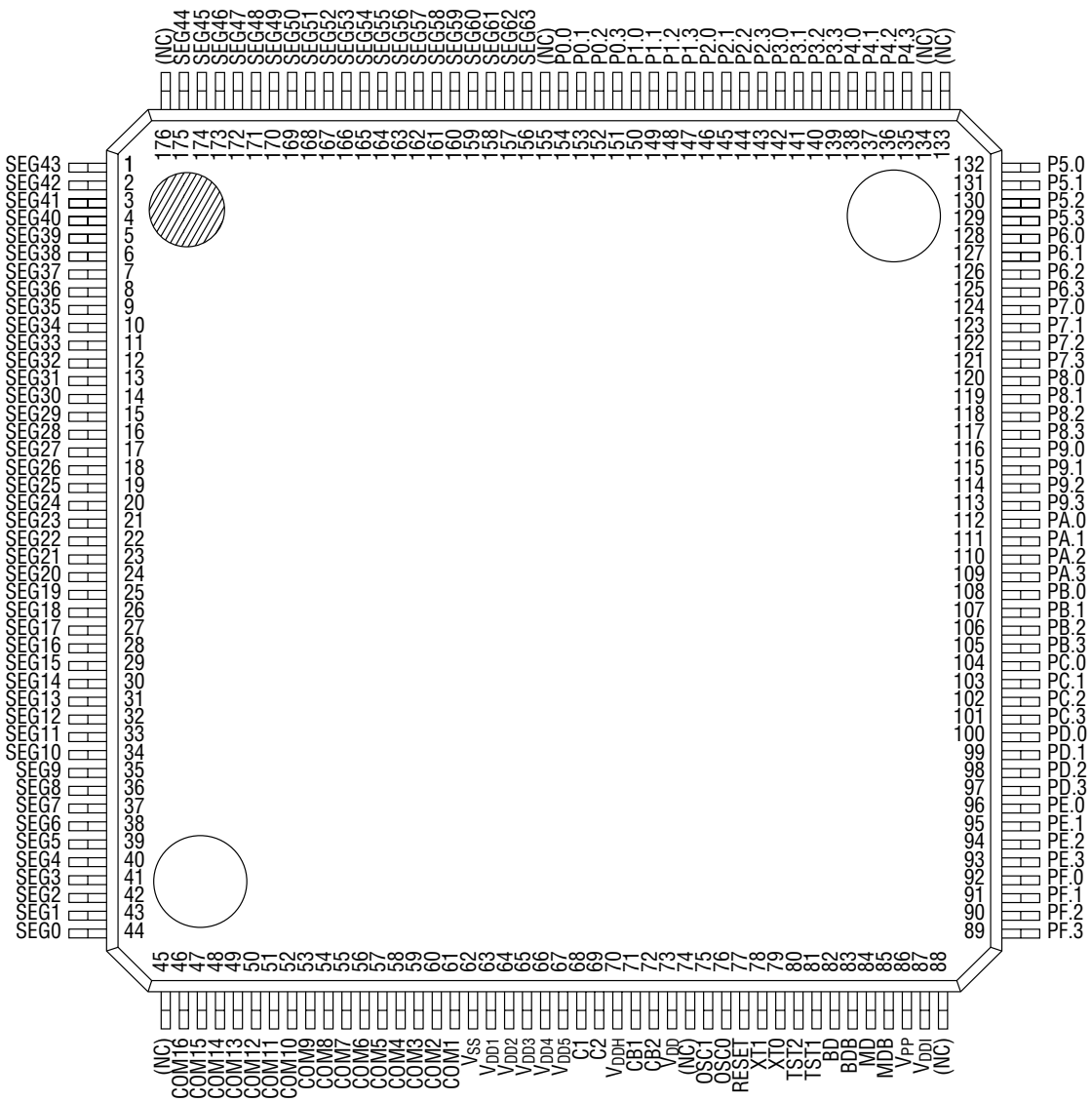

176-Pin Plastic LQFP

Note: Pins marked as (NC) are no-connection pins which are left open.

PIN DESCRIPTIONS

The basic functions of each pin of the MSM63P180 are described in Table 1.
A symbol with a slash (/) denotes a pin that has a secondary function.
Refer to Table 2 for secondary functions.
For type, "—" denotes a power supply pin, "I" an input pin, "O" an output pin, and "I/O" an input-output pin.

Table 1 Pin Descriptions (Basic Functions)

Function	Symbol	Pin	Type	Description
Power Supply	V_{PP}	86	—	Power supply (+12.5 V) for PROM writing
	V_{DD}	73	—	Positive power supply
	V_{SS}	62	—	Negative power supply
	V_{DD1}	63	—	Power supply pins for LCD bias (internally generated). Capacitors (0.1 μF) should be connected between these pins and V_{SS}.
	V_{DD2}	64		
	V_{DD3}	65		
	V_{DD4}	66		
	V_{DD5}	67		
	C1	68	—	Capacitor connection pins for LCD bias generation. A capacitor (0.1 μF) should be connected between C1 and C2.
	C2	69		
	V_{DDI}	87	—	Positive power supply pin for external interface (power supply for input, output, and input-output ports)
	V_{DDH}	70	—	Voltage multiplier pin for power supply backup (internally generated). To enable high-speed oscillation, apply 2.7 V to V_{DDH} with CB1 and CB2 left open (backup OFF). To disable high-speed oscillation, connect a 1 μF capacitor between V_{DDH} and V_{SS} and between CB1 and CB2.
	CB1	71	—	Pins to connect a capacitor for voltage multiplier. A capacitor (0.1 μF) should be connected between CB1 and CB2.
	CB2	72	—	
Oscillation	XT0	79	I	Low-speed clock oscillation pins. A 32.768 kHz crystal should be connected between XT0 and XT1, and C_G (12 to 30 pF) should be connected between XT0 and V_{SS}.
	XT1	78	O	
	OSC0	76	I	High-speed clock oscillation pins. A ceramic resonator and capacitors (C_{L0}, C_{L1}) or external oscillation resistor (R_{OS}) should be connected to these pins.
	OSC1	75	O	
Test	TST1	81	I	Input pins for testing. A pull-down resistor is internally connected to these pins. The user cannot use these pins.
	TST2	80	I	
Reset	RESET	77	I	Reset input pin. Setting this pin to "H" level puts this device into a reset state. Then, setting this pin to "L" level starts executing an instruction from address 0000H. A pull-down resistor is internally connected to this pin.
Buzzer	BD	82	O	Buzzer output pin (non-inverted output)
	BDB	83	O	Buzzer output pin (inverted output)
Melody	MD	84	O	Melody output pin (non-inverted output)
	MDB	85	O	Melody output pin (inverted output)

Table 1 Pin Descriptions (Basic Functions) (continued)

Function	Symbol	Pin	Type	Description
Port	P0.0/INT5	154	I	4-bit input ports. Pull-up resistor input, pull-down resistor input, or high-impedance input is selectable for each bit.
	P0.1/INT5	153		
	P0.2/INT5	152		
	P0.3/INT5	151		
	P1.0/INT5	150	I	
	P1.1/INT5	149		
	P1.2/INT5	148		
	P1.3/INT5	147		
	P2.0	146	O	4-bit output ports. P-channel open drain output, N-channel open drain output, CMOS output, or high-impedance output is selectable for each bit.
	P2.1	145		
	P2.2	144		
	P2.3	143		
	P3.0	142	O	
	P3.1	141		
	P3.2	140		
	P3.3	139		
	P4.0/A0	138	O	
	P4.1/A1	137		
	P4.2/A2	136		
	P4.3/A3	135		
	P5.0/A4	132	O	
	P5.1/A5	131		
	P5.2/A6	130		
	P5.3/A7	129		
	P6.0/A8	128	O	
	P6.1/A9	127		
	P6.2/A10	126		
	P6.3/A11	125		
	P7.0/A12	124	O	
	P7.1/A13	123		
	P7.2/A14	122		
	P7.3/A15	121		

Table 1 Pin Descriptions (Basic Functions) (continued)

Function	Symbol	Pin	Type	Description
Port	P8.0/$\overline{RD}$	120	I/O	4-bit input-output ports. In input mode, pull-up resistor input, pull-down resistor input, or high-impedance input is selectable for each bit. In output mode, P-channel open drain output, N-channel open drain output, CMOS output, or high-impedance output is selectable for each bit.
	P8.1/$\overline{WR}$	119		
	P8.2	118		
	P8.3/INT4	117		
	P9.0/D0	116	I/O	
	P9.1/D1	115		
	P9.2/D2	114		
	P9.3/D3	113		
	PA.0/D4	112	I/O	
	PA.1/D5	111		
	PA.2/D6	110		
	PA.3/D7	109		
	PB.0/INT0/ TM0CAP/ TM0OVF	108	I/O	
	PB.1/INT0/ TM1CAP/ TM1OVF	107		
	PB.2/INT0/T02CK	106		
	PB.3/INT0/T13CK	105		
	PC.0/INT1/RXD	104	I/O	
	PC.1/INT1/TXC	103		
	PC.2/INT1/RXC	102		
	PC.3/INT1/TXD	101		
	PD.0/FRAME	100	I/O	
	PD.1/LCLK	99		
	PD.2/TBCCLK	98		
	PD.3/HSCLK	97		
	PE.0/SIN	96	I/O	
	PE.1/SOUT	95		
	PE.2/SCLK	94		
	PE.3/INT2	93		
	PF.0/INT3	92	I/O	
	PF.1/INT3	91		
	PF.2/INT3	90		
	PF.3/INT3	89		

Table 1 Pin Descriptions (Basic Functions) (continued)

Function	Symbol	Pin	Type	Description
LCD	COM1	61	O	LCD common signal output pins
	COM2	60		
	COM3	59		
	COM4	58		
	COM5	57		
	COM6	56		
	COM7	55		
	COM8	54		
	COM9	53		
	COM10	52		
	COM11	51		
	COM12	50		
	COM13	49		
	COM14	48		
	COM15	47		
	COM16	46		
	SEG0	44	O	LCD segment signal output pins
	SEG1	43		
	SEG2	42		
	SEG3	41		
	SEG4	40		
	SEG5	39		
	SEG6	38		
	SEG7	37		
	SEG8	36		
	SEG9	35		
	SEG10	34		
	SEG11	33		
	SEG12	32		
	SEG13	31		
	SEG14	30		
	SEG15	29		
	SEG16	28		
	SEG17	27		
	SEG18	26		
	SEG19	25		
	SEG20	24		
	SEG21	23		
	SEG22	22		
	SEG23	21		
	SEG24	20		

Table 1 Pin Descriptions (Basic Functions) (continued)

Function	Symbol	Pin	Type	Description
LCD	SEG25	19	O	LCD segment signal output pins
	SEG26	18		
	SEG27	17		
	SEG28	16		
	SEG29	15		
	SEG30	14		
	SEG31	13		
	SEG32	12		
	SEG33	11		
	SEG34	10		
	SEG35	9		
	SEG36	8		
	SEG37	7		
	SEG38	6		
	SEG39	5		
	SEG40	4		
	SEG41	3		
	SEG42	2		
	SEG43	1		
	SEG44	175		
	SEG45	174		
	SEG46	173		
	SEG47	172		
	SEG48	171		
	SEG49	170		
	SEG50	169		
	SEG51	168		
	SEG52	167		
	SEG53	166		
	SEG54	165		
	SEG55	164		
	SEG56	163		
	SEG57	162		
	SEG58	161		
	SEG59	160		
	SEG60	159		
	SEG61	158		
	SEG62	157		
	SEG63	156		

Table 2 shows the secondary functions of each pin of the MSM63P180.

Table 2 Pin Descriptions (Secondary Functions)

Function	Symbol	Pin	Type	Description
External Interrupt	PB.0/INT0	108	I	External 0 interrupt input pins. The change of input signal level causes an interrupt to occur. The Port B Interrupt Enable register (PBIE) enables or disables an interrupt for each bit.
	PB.1/INT0	107		
	PB.2/INT0	106		
	PB.3/INT0	105		
	PC.0/INT1	104	I	External 1 interrupt input pins. The change of input signal level causes an interrupt to occur. The Port C Interrupt Enable register (PCIE) enables or disables an interrupt for each bit.
	PC.1/INT1	103		
	PC.2/INT1	102		
	PC.3/INT1	101		
	PE.3/INT2	93	I	External 2 interrupt input pin. The change of input signal level causes an interrupt to occur.
	PF.0/INT3	92	I	External 3 interrupt input pins. The change of input signal level causes an interrupt to occur. The Port F Interrupt Enable register (PFIE) enables or disables an interrupt for each bit.
	PF.1/INT3	91		
	PF.2/INT3	90		
	PF.3/INT3	89		
	P8.3/INT4	117	I	External 4 interrupt input pin. The change of input signal level causes an interrupt to occur.
	P0.0/INT5	154	I	External 5 interrupt input pins. The change of input signal level causes an interrupt to occur. The Port 0 Interrupt Enable register (P0IE) and Port 1 Interrupt Enable register (P1IE) enable or disable an interrupt for each bit.
	P0.1/INT5	153		
	P0.2/INT5	152		
	P0.3/INT5	151		
	P1.0/INT5	150		
	P1.1/INT5	149		
	P1.2/INT5	148		
	P1.3/INT5	147		
Capture	P1.0/TBCAP0	150	I	Time base counter capture trigger input pins
	P1.1/TBCAP1	149		
	PB.0/TM0CAP	108	I	Timer 0 capture trigger input pin
	PB.1/TM1CAP	107	I	Timer 1 capture trigger input pin

Table 2 Pin Descriptions (Secondary Functions) (continued)

Function	Symbol	Pin	Type	Description
Timer	PB.0/TM0OVF	108	O	Timer 0 overflow flag output pin.
	PB.1/TM1OVF	107	O	Timer 1 overflow flag output pin.
	PB.2/T02CK	106	I	External clock input pin for timer 0 and timer 2.
	PB.3/T13CK	105	I	External clock input pin for timer 1 and timer 3.
LCD External Expansion	PD.0/FRAME	100	O	Frame output pin for LCD driver expansion
	PD.1/LCLK	99	O	Clock output pin for LCD driver expansion
Oscillation Output	PD.2/TBCCLK	98	O	Low-speed oscillation clock output pin
	PD.3/HSCLK	97	O	High-speed oscillation clock output pin
Serial Port	PC.0/RXD	104	I	Serial port receive data input pin
	PC.1/TXC	103	I/O	Sync serial port clock input-output pin. Transmit clock output when this device is used as a master processor. Transmit clock input when this device is used as a slave processor.
	PC.2/RXC	102	I/O	Sync serial port clock input-output pin. Receive clock output when this device is used as a master processor. Receive clock input when this device is used as a slave processor.
	PC.3/TXD	101	O	Serial port transmit data output pin.
Shift Register	PE.0/SIN	96	I	Shift register receive data input pin
	PE.1/SOUT	95	O	Shift register transmit data output pin
	PE.2/SCLK	94	I/O	Shift register clock input-output pin. Clock output when this device is used as a master processor. Clock input when this device is used as a slave processor.

Table 2 Pin Descriptions (Secondary Functions) (continued)

Function	Symbol	Pin	Type	Description
External Memory	P4.0/A0	138	O	Address output bus for external memory
	P4.1/A1	137		
	P4.2/A2	136		
	P4.3/A3	135		
	P5.0/A4	132		
	P5.1/A5	131		
	P5.2/A6	130		
	P5.3/A7	129		
	P6.0/A8	128		
	P6.1/A9	127		
	P6.2/A10	126		
	P6.3/A11	125		
	P7.0/A12	124		
	P7.1/A13	123		
	P7.2/A14	122		
	P7.3/A15	121		
	P9.0/D0	116	I/O	Data bus for external memory
	P9.1/D1	115		
	P9.2/D2	114		
	P9.3/D3	113		
	PA.0/D4	112		
	PA.1/D5	111		
	PA.2/D6	110		
	PA.3/D7	109		
	P8.0/$\overline{RD}$	120	O	Read signal output pin for external memory (negative logic)
	P8.1/$\overline{WR}$	119	O	Write signal output pin for external memory (negative logic)

ABSOLUTE MAXIMUM RATINGS

(V_{SS} = 0 V)

Parameter	Symbol	Condition	Rating	Unit
Power Supply Voltage 1	V_{DD1}	Ta = 25°C	–0.3 to +1.6	V
Power Supply Voltage 2	V_{DD2}	Ta = 25°C	–0.3 to +2.9	V
Power Supply Voltage 3	V_{DD3}	Ta = 25°C	–0.3 to +4.2	V
Power Supply Voltage 4	V_{DD4}	Ta = 25°C	–0.3 to +5.5	V
Power Supply Voltage 5	V_{DD5}	Ta = 25°C	–0.3 to +6.8	V
Power Supply Voltage 6	V_{DD}	Ta = 25°C	–0.3 to +6.0	V
Power Supply Voltage 7	V_{DDI}	Ta = 25°C	–0.3 to +6.0	V
Power Supply Voltage 8	V_{DDH}	Ta = 25°C	–0.3 to +6.0	V
Power Supply Voltage 9	V_{DDL}	Ta = 25°C	–0.3 to +6.0	V
Input Voltage 1	V_{IN1}	V_{DD} Input, Ta = 25°C	–0.3 to V_{DD} + 0.3	V
Input Voltage 2	V_{IN2}	V_{DDI} Input, Ta = 25°C	–0.3 to V_{DDI} + 0.3	V
Output Voltage 1	V_{OUT1}	V_{DD1} Output, Ta = 25°C	–0.3 to V_{DD1} + 0.3	V
Output Voltage 2	V_{OUT2}	V_{DD2} Output, Ta = 25°C	–0.3 to V_{DD2} + 0.3	V
Output Voltage 3	V_{OUT3}	V_{DD3} Output, Ta = 25°C	–0.3 to V_{DD3} + 0.3	V
Output Voltage 4	V_{OUT4}	V_{DD4} Output, Ta = 25°C	–0.3 to V_{DD4} + 0.3	V
Output Voltage 5	V_{OUT5}	V_{DD5} Output, Ta = 25°C	–0.3 to V_{DD5} + 0.3	V
Output Voltage 6	V_{OUT6}	V_{DD} Output, Ta = 25°C	–0.3 to V_{DD} + 0.3	V
Output Voltage 7	V_{OUT7}	V_{DDI} Output, Ta = 25°C	–0.3 to V_{DDI} + 0.3	V
Output Voltage 8	V_{OUT8}	V_{DDH} Output, Ta = 25°C	–0.3 to V_{DDH} + 0.3	V
Storage Temperature	T_{STG}	—	–55 to +150	°C

RECOMMENDED OPERATING CONDITIONS

• When backup is used

(V_{SS} = 0 V)

Parameter	Symbol	Condition	Range	Unit
Operating Temperature	T_{op}	—	0 to +65	°C
Operating Voltage	V_{DD}	—	1.45 to 2.7	V
	V_{DDI}	—	1.5 to 5.5	V
Crystal Oscillation Frequency	f_{XT}	—	30 to 35	kHz
Ceramic Oscillation Frequency	f_{CM}	V_{DD} = 1.45 to 2.7 V (*1)	200k to 1M	Hz
External RC Oscillator Resistance	R_{OS}	V_{DD} = 1.45 to 2.7 V (*1)	50 to 300	kΩ

*1 A voltage of 2.7 V or more must be applied to V_{DDH}.

• When backup is not used

(V_{SS} = 0 V)

Parameter	Symbol	Condition	Range	Unit
Operating Temperature	T_{op}	—	0 to +65	°C
Operating Voltage	V_{DD}	—	2.7 to 5.5	V
	V_{DDI}	—	1.8 to 5.5	V
Crystal Oscillation Frequency	f_{XT}	—	30 to 35	kHz
Ceramic Oscillation Frequency	f_{CM}	V_{DD} = 2.7 to 5.5 V	300k to 1M	Hz
		V_{DD} = 2.9 to 5.5 V	200k to 2M	
External RC Oscillator Resistance	R_{OS}	V_{DD} = 2.7 to 5.5 V	50 to 300	kΩ
		V_{DD} = 2.9 to 5.5 V	30 to 300	

ELECTRICAL CHARACTERISTICS

DC Characteristics

(V_{DD} = V_{DDI} = 1.45 to 5.5 V, V_{SS} = 0 V, Ta = 0 to +65°C unless otherwise specified)

Parameter	Symbol	Condition	Min.	Typ.	Max.	Unit	Measuring Circuit
V_{DD2} Voltage	V_{DD2}	1/5 bias, 1/4 bias (Ta = 25°C)	1.7	1.8	1.9	V	
V_{DD2} Voltage Temperature Deviation	ΔV_{DD2}	—	—	–4	—	mV/°C	
V_{DD1} Voltage	V_{DD1}	1/5 bias, 1/4 bias	Typ.– 0.2	1/2 × V_{DD2}	Typ.+ 0.2	V	
V_{DD3} Voltage	V_{DD3}	1/5 bias	Typ.– 0.3	3/2 × V_{DD2}	Typ.+ 0.2	V	
		1/4 bias (connect V_{DD3} and V_{DD2})	Typ.– 0.2	V_{DD2}	Typ.+ 0.2		
V_{DD4} Voltage	V_{DD4}	1/5 bias	Typ.– 0.4	2 × V_{DD2}	Typ.+ 0.2	V	
		1/4 bias	Typ.– 0.3	3/2 × V_{DD2}	Typ.+ 0.2		
V_{DD5} Voltage	V_{DD5}	1/5 bias	Typ.– 0.5	5/2 × V_{DD2}	Typ.+ 0.2	V	
		1/4 bias	Typ.– 0.4	2 × V_{DD2}	Typ.+ 0.2		
V_{DDH} Voltage (backup used)	V_{DDH}	High-speed clock oscillation stopped V_{DD} = 1.5 V	2.8	—	3.0	V	1
Crystal Oscillation Start Voltage	V_{STA}	Oscillation start time: within 5 seconds	1.40	—	—	V	
Crystal Oscillation Hold Voltage	V_{HOLD}	—	1.35	—	—	V	
Crystal Oscillation Stop Detect Time	T_{STOP}	—	0.1	—	5.0	ms	
External Crystal Oscillator Capacitance	C_G	—	12	—	30	pF	
Internal Crystal Oscillator Capacitance	C_D	—	12	15	20	pF	
External Ceramic Oscillator Capacitance	$C_{L0, 1}$	CSA2.00MG (Murata MFG.-make) used V_{DD} = 3.0 V	—	30	—	pF	
Internal RC Oscillator Capacitance	C_{OS}	—	8	12	16	pF	
POR Voltage	V_{POR1}	V_{DD} = 1.5 V	0.0	—	0.4	V	
		—	0.0	—	0.7	V	
Non-POR Voltage	V_{POR2}	V_{DD} = 1.5 V	1.2	—	1.5	V	
		—	2.0	—	3.0	V	

Notes: 1. "T_{STOP}" indicates that if the crystal oscillator stops over the value of T_{STOP}, the system reset occurs.
2. "POR" denotes Power On Reset.
3. "V_{POR1}" indicates that POR occurs when V_{DD} falls from V_{DD} to V_{POR1} and again rises up to V_{DD}.
4. "V_{POR2}" indicates that POR does not occur when V_{DD} falls from V_{DD} to V_{POR2} and again rises up to V_{DD}.

DC Characteristics

• When backup is used

(V_{DD} = V_{DDI} = 1.5 V, V_{DDH} = 3.0 V, V_{SS} = 0 V, Ta = 0 to +65°C unless otherwise specified)

Parameter	Symbol	Condition	Min.	Typ.	Max.	Unit	Measuring Circuit
Supply Current 1	I_{DD1}	CPU is in HALT state. (High-speed clock oscillation stopped)	—	10	20	µA	1
Supply Current 2	I_{DD2}	CPU is in HALT state. LCD is in Power Down mode. (High-speed clock oscillation stopped)	—	8	16	µA	
Supply Current 3	I_{DD3}	CPU is in operating state. (High-speed clock oscillation stopped)	—	100	140	µA	
Supply Current 4	I_{DD4}	CPU is in operation at high-speed oscillation (RC oscillation, R_{OS} = 51 kΩ)	—	1.5	2	mA	
Supply Current 5	I_{DD5}	CPU is in operation at high-speed oscillation (Ceramic oscillation, 1 MHz)	—	2	3	mA	

• When backup is not used

(V_{DD} = V_{DDI} = V_{DDH} = 3.0 V, V_{SS} = 0 V, Ta = 0 to +65°C unless otherwise specified)

Parameter	Symbol	Condition	Min.	Typ.	Max.	Unit	Measuring Circuit
Supply Current 1	I_{DD1}	CPU is in HALT state. (High-speed clock oscillation stopped)	—	5	10	µA	1
Supply Current 2	I_{DD2}	CPU is in HALT state. LCD is in Power Down mode. (High-speed clock oscillation stopped)	—	4	7	µA	
Supply Current 3	I_{DD3}	CPU is in operating state. (High-speed clock oscillation stopped)	—	60	120	µA	
Supply Current 4	I_{DD4}	CPU is in operation at high-speed oscillation (RC oscillation, R_{OS} = 51 kΩ)	—	1.5	2	mA	
Supply Current 5	I_{DD5}	CPU is in operation at high-speed oscillation (Ceramic oscillation, 2 MHz)	—	3.5	5	mA	

DC Characteristics (continued)

(V_{DD} = V_{DDI} = V_{DDH} = 3.0 V, V_{SS} = 0 V, V_{DD1} = 1.1 V, V_{DD2} = 2.2 V, V_{DD3} = 3.3 V, V_{DD4} = 4.4 V, V_{DD5} = 5.5 V, Ta = 0 to +65°C unless otherwise specified)

Parameter	Symbol	Condition		Min.	Typ.	Max.	Unit	Measuring Circuit
Output Current 1 (P2.0 to P2.3) (P3.0 to P3.3) (P4.0 to P4.3) ⋮ (PF.0 to PF.3)	I_{OH1}	V_{OH1} = V_{DDI} – 0.5 V	V_{DDI} = 1.5 V	–2.1	–1.0	–0.2	mA	
			V_{DDI} = 3.0 V	–5.0	–2.5	–1.0	mA	
			V_{DDI} = 5.0 V	–8.0	–4.0	–2.0	mA	
	I_{OL1}	V_{OL1} = 0.5 V	V_{DDI} = 1.5 V	0.2	1.0	2.1	mA	
			V_{DDI} = 3.0 V	1.0	2.5	5.0	mA	
			V_{DDI} = 5.0 V	2.0	4.0	8.0	mA	
Output Current 2 (BD, BDB) (MD, MDB)	I_{OH2}	V_{OH2} = V_{DD} – 0.7 V	V_{DD} = 1.5 V	–1.8	–1.0	–0.2	mA	
			V_{DD} = 3.0 V	–5.0	–3.0	–1.0	mA	
			V_{DD} = V_{DDH} = 5.0 V	–9.0	–5.5	–4.0	mA	
	I_{OL2}	V_{OL2} = 0.7 V	V_{DD} = 1.5 V	0.2	1.0	1.8	mA	
			V_{DD} = 3.0 V	1.0	3.0	5.0	mA	
			V_{DD} = V_{DDH} = 5.0 V	4.0	5.5	9.0	mA	
Output Current 3 (SEG0 to SEG63) (COM1 to COM16)	I_{OH3}	V_{OH3} = V_{DD5} – 0.2 V (V_{DD5} level)		—	—	–4	µA	2
	I_{OHM3}	V_{OHM3} = V_{DD4} + 0.2 V (V_{DD4} level)		4	—	—	µA	
	I_{OHM3S}	V_{OHM3S} = V_{DD4} – 0.2 V (V_{DD4} level)		—	—	–4	µA	
	I_{OMH3}	V_{OMH3} = V_{DD3} + 0.2 V (V_{DD3} level)		4	—	—	µA	
	I_{OMH3S}	V_{OMH3S} = V_{DD3} – 0.2 V (V_{DD3} level)		—	—	–4	µA	
	I_{OML3}	V_{OML3} = V_{DD2} + 0.2 V (V_{DD2} level)		4	—	—	µA	
	I_{OML3S}	V_{OML3S} = V_{DD2} – 0.2 V (V_{DD2} level)		—	—	–4	µA	
	I_{OLM3}	V_{OLM3} = V_{DD1} + 0.2 V (V_{DD1} level)		4	—	—	µA	
	I_{OLM3S}	V_{OLM3S} = V_{DD1} – 0.2 V (V_{DD1} level)		—	—	–4	µA	
	I_{OL3}	V_{OL3} = V_{SS} + 0.2 V (V_{SS} level)		4	—	—	µA	
Output Current 4 (OSC1)	I_{OH4R}	V_{OH4R} = V_{DDH} – 0.5 V (RC oscillation)	V_{DD} = V_{DDH} = 3.0 V	–2.0	–1.2	–0.6	mA	
			V_{DD} = V_{DDH} = 5.0 V	–3.5	–2.0	–1.0	mA	
	I_{OL4R}	V_{OL4R} = 0.5 V (RC oscillation)	V_{DD} = V_{DDH} = 3.0 V	0.6	1.2	2.0	mA	
			V_{DD} = V_{DDH} = 5.0 V	1.0	2.0	3.5	mA	
	I_{OH4C}	V_{OH4C} = V_{DDH} – 0.5 V (ceramic oscillation)	V_{DD} = V_{DDH} = 3.0 V	–200	–100	–50	µA	
			V_{DD} = V_{DDH} = 5.0 V	–400	–200	–100	µA	
	I_{OL4C}	V_{OL4C} = 0.5 V (ceramic oscillation)	V_{DD} = V_{DDH} = 3.0 V	50	100	200	µA	
			V_{DD} = V_{DDH} = 5.0 V	100	200	400	µA	
Output Leakage (P2.0 to P2.3) (P3.0 to P3.3) (P4.0 to P4.3) ⋮ (PF.0 to PF.3)	I_{OOH}	V_{OH} = V_{DDI}		—	—	0.3	µA	
	I_{OOL}	V_{OL} = V_{SS}		–0.3	—	—	µA	

DC Characteristics (continued)

(V_{DD} = V_{DDI} = V_{DDH} = 3.0 V, V_{SS} = 0 V, V_{DD1} = 1.1 V, V_{DD2} = 2.2 V, V_{DD3} = 3.3 V, V_{DD4} = 4.4 V, V_{DD5} = 5.5 V, Ta = 0 to +65°C unless otherwise specified)

Parameter	Symbol	Condition		Min.	Typ.	Max.	Unit	Measuring Circuit
Input Current 1 (P0.0 to P0.3) (P1.0 to P1.3) (P8.0 to P8.3) (P9.0 to P9.3) ⋮ (PF.0 to PF.3)	I_{IH1}	V_{IH1} = V_{DDI} (when pulled down)	V_{DDI} = 1.5 V	2	10	30	µA	3
			V_{DDI} = 3.0 V	30	90	180	µA	
			V_{DDI} = 5.0 V	100	250	500	µA	
	I_{IL1}	V_{IL1} = V_{SS} (when pulled up)	V_{DDI} = 1.5 V	–30	–10	–2	µA	
			V_{DDI} = 3.0 V	–180	–90	–30	µA	
			V_{DDI} = 5.0 V	–500	–250	–100	µA	
	I_{IH1Z}	V_{IH1} = V_{DDI} (in a high impedance state)		0.0	—	1.0	µA	
	I_{IL1Z}	V_{IL1} = V_{SS} (in a high impedance state)		–1.0	—	0.0	µA	
Input Current 2 (OSC0)	I_{IL2}	V_{IL2} = V_{SS} (when pulled up)	V_{DD} = V_{DDH} = 3.0 V	–200	–110	–30	µA	
			V_{DD} = V_{DDH} = 5.0 V	–600	–350	–150	µA	
	I_{IH2R}	V_{IH2} = V_{DDH} (RC oscillation)		0.0	—	1.0	µA	
	I_{IL2R}	V_{IL2} = V_{SS} (RC oscillation)		–1.0	—	0.0	µA	
	I_{IH2C}	V_{IH2} = V_{DDH} (ceramic oscillation)	V_{DD} = V_{DDH} = 3.0 V	0.1	0.5	1.0	µA	
			V_{DD} = V_{DDH} = 5.0 V	0.75	1.5	3.0	µA	
	I_{IL2C}	V_{IL2} = V_{SS} (ceramic oscillation)	V_{DD} = V_{DDH} = 3.0 V	–1.0	–0.5	–0.1	µA	
			V_{DD} = V_{DDH} = 5.0 V	–3.0	–1.5	–0.75	µA	
Input Current 3 (RESET)	I_{IH3}	V_{IH3} = V_{DD}	V_{DD} = 1.5 V	10	40	80	µA	
			V_{DD} = 3.0 V	150	350	600	µA	
			V_{DD} = V_{DDH} = 5.0 V	0.5	1.0	2.0	mA	
	I_{IL3}	V_{IL3} = V_{SS}		–1.0	—	0.0	µA	
Input Current 4 (TST1, TST2)	I_{IH4}	V_{IH4} = V_{DD}	V_{DD} = 1.5 V	30	120	300	µA	
			V_{DD} = 3.0 V	0.3	0.75	1.5	mA	
			V_{DD} = V_{DDH} = 5.0 V	1.25	2.5	4.0	mA	
	I_{IL4}	V_{IL4} = V_{SS}		–1.0	—	0.0	µA	

DC Characteristics (continued)

(V_{DD} = V_{DDI} = V_{DDH} = 3.0 V, V_{SS} = 0 V, V_{DD1} = 1.1 V, V_{DD2} = 2.2 V, V_{DD3} = 3.3 V, V_{DD4} = 4.4 V, V_{DD5} = 5.5 V, Ta = 0 to +65°C unless otherwise specified)

Parameter	Symbol	Condition	Min.	Typ.	Max.	Unit	Measuring Circuit
Input Voltage 1 (P0.0 to P0.3) (P1.0 to P1.3) (P8.0 to P8.3) (P9.0 to P9.3) ⋮ (PF.0 to PF.3)	V_{IH1}	V_{DDI} = 1.5 V	1.2	—	1.5	V	4
		V_{DDI} = 3.0 V	2.4	—	3.0	V	
		V_{DDI} = 5.0 V	4.0	—	5.0	V	
	V_{IL1}	V_{DDI} = 1.5 V	0.0	—	0.3	V	
		V_{DDI} = 3.0 V	0.0	—	0.6	V	
		V_{DDI} = 5.0 V	0.0	—	1.0	V	
Input Voltage 2 (OSC0)	V_{IH2}	V_{DD} = V_{DDH} = 3.0 V	2.4	—	3.0	V	
		V_{DD} = V_{DDH} = 5.0 V	4.0	—	5.0	V	
	V_{IL2}	V_{DD} = V_{DDH} = 3.0 V	0.0	—	0.6	V	
		V_{DD} = V_{DDH} = 5.0 V	0.0	—	1.0	V	
Input Voltage 3 (RESET, TST1, TST2)	V_{IH3}	V_{DD} = 1.5 V	1.35	—	1.5	V	
		V_{DD} = 3.0 V	2.4	—	3.0	V	
		V_{DD} = V_{DDH} = 5.0 V	4.0	—	5.0	V	
	V_{IL3}	V_{DD} = 1.5 V	0.0	—	0.15	V	
		V_{DD} = 3.0 V	0.0	—	0.6	V	
		V_{DD} = V_{DDH} = 5.0 V	0.0	—	1.0	V	
Hysteresis Width 1 (P0.0 to P0.3) (P1.0 to P1.3) (P8.0 to P8.3) ⋮ (PF.0 to PF.3)	ΔV_{T1}	V_{DDI} = 1.5 V	0.05	0.1	0.3	V	
		V_{DDI} = 3.0 V	0.2	0.5	1.0	V	
		V_{DDI} = 5.0 V	0.25	1.0	1.5	V	
Hysteresis Width 2 (RESET, TST1, TST2)	ΔV_{T2}	V_{DD} = 1.5 V	0.05	0.1	0.3	V	
		V_{DD} = 3.0 V	0.2	0.5	1.0	V	
		V_{DD} = V_{DDH} = 5.0 V	0.25	1.0	1.5	V	
Input Pin Capacitance (P0.0 to P0.3) (P1.0 to P1.3) (P8.0 to P8.3) (P9.0 to P9.3) ⋮ (PF.0 to PF.3)	C_{IN}	—	—	—	5	pF	1

Measuring circuit 1

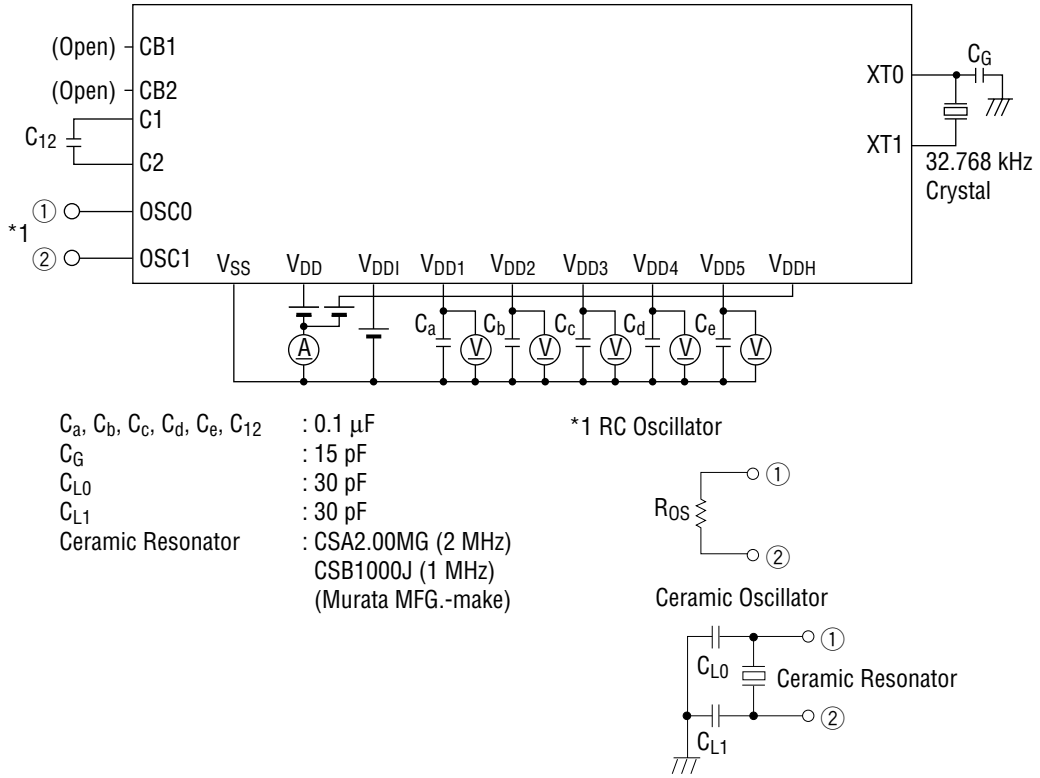

C_a, C_b, C_c, C_d, C_e, C_{12} : 0.1 µF
C_G : 15 pF
C_{L0} : 30 pF
C_{L1} : 30 pF
Ceramic Resonator : CSA2.00MG (2 MHz)
CSB1000J (1 MHz)
(Murata MFG.-make)

*1 RC Oscillator

Ceramic Oscillator

Measuring circuit 2

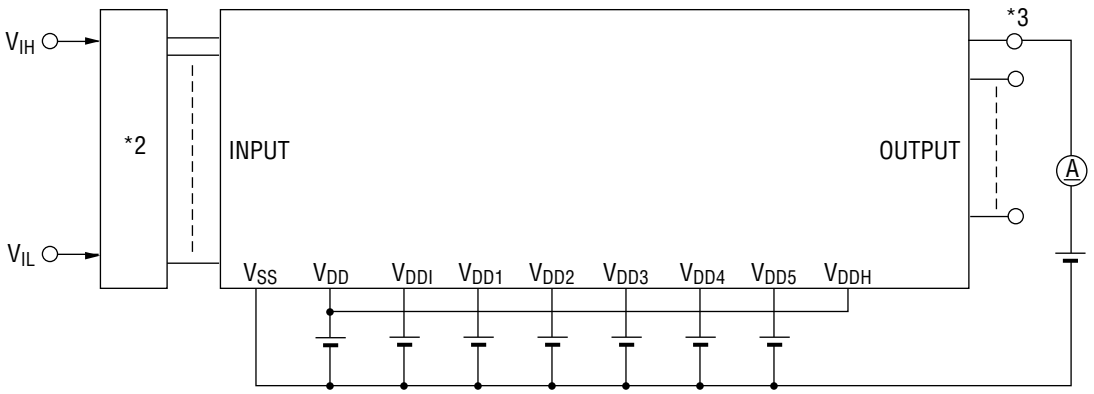

*2 Input logic circuit to determine the specified measuring conditions.
*3 Measured at the specified output pins.

Measuring circuit 3

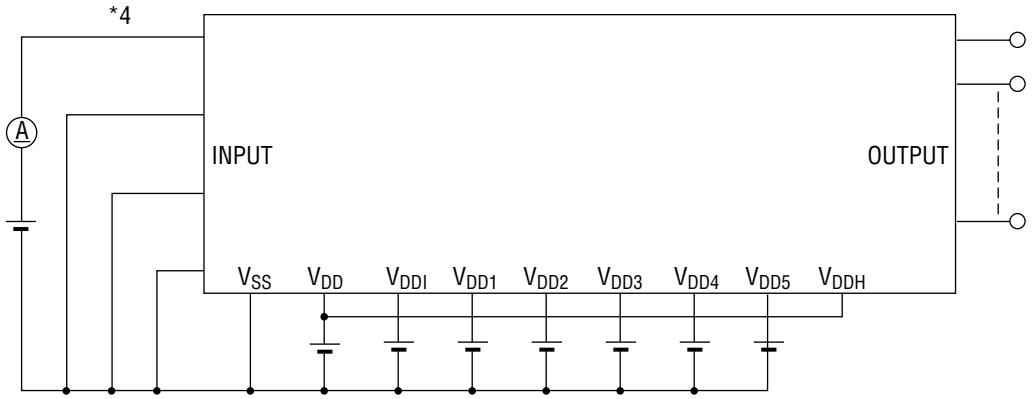

Measuring circuit 4

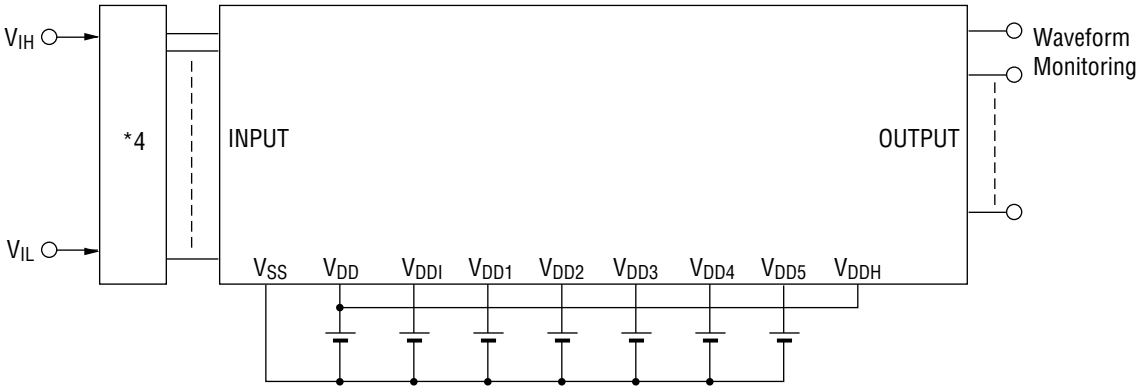

*4 Measured at the specified input pins.

AC Characteristics (Serial Interface, Serial Port)

(V_{DD} = 1.45 to 5.5 V, V_{DDH} = 2.7 to 5.5 V, V_{SS} = 0 V, V_{DDI} = 5.0 V, Ta = 0 to +65°C unless otherwise specified)

(1) Synchronous Communication

Parameter	Symbol	Condition	Min.	Typ.	Max.	Unit
TXC/RXC Input Fall Time	t_f	—	—	—	1.0	µs
TXC/RXC Input Rise Time	t_r	—	—	—	1.0	µs
TXC/RXC Input "L" Level Pulse Width	t_{CWL}	—	0.8	—	—	µs
TXC/RXC Input "H" Level Pulse Width	t_{CWH}	—	0.8	—	—	µs
TXC/RXC Input Cycle Time	t_{CYC}	—	2.0	—	—	µs
TXC/RXC Output Cycle Time	$t_{CYC1(O)}$	CPU in operation state at 32 kHz	—	30.5	—	µs
	$t_{CYC2(O)}$	CPU in operation at 2 MHz V_{DD} = V_{DDH} = 2.9 V to 5.5 V	—	0.5	—	µs
TXD Output Delay Time	t_{DDR}	Output load capacitance 10 pF	—	—	0.4	µs
RXD Input Setup Time	t_{DS}	—	0.5	—	—	µs
RXD Input Hold Time	t_{DH}	—	0.8	—	—	µs

Synchronous communication timing
("H" level = 4.0 V, "L" level = 1.0 V)

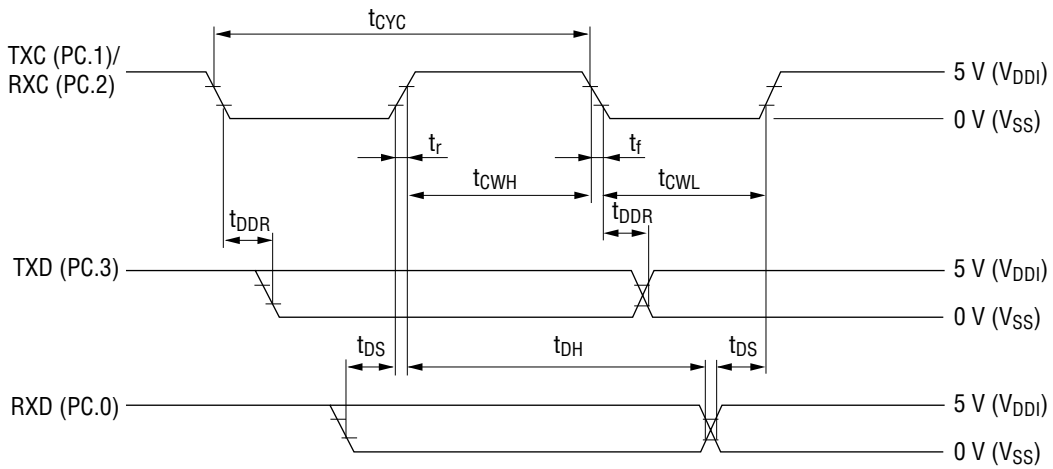

(2) UART Communication

Parameter	Symbol	Condition	Min.	Typ.	Max.	Unit
Transmit Baud Rate	T_{BRT}	$T_{BRT} = 1/f_{BRT}$ $T_{CR} = 1/f_{OSC}$	$T_{BRT}-T_{CR}$	T_{BRT}	$T_{BRT}+T_{CR}$	s
Receive Baud Rate	R_{BRT}	$R_{BRT} = 1/f_{BRT}$	$R_{BRT}\times0.97$	R_{BRT}	$R_{BRT}\times1.03$	s

f_{BRT}: Baud rates (1200, 2400, 4800, 9600 bps)

UART communication timing
("H" level = 4.0 V, "L" level = 1.0 V)

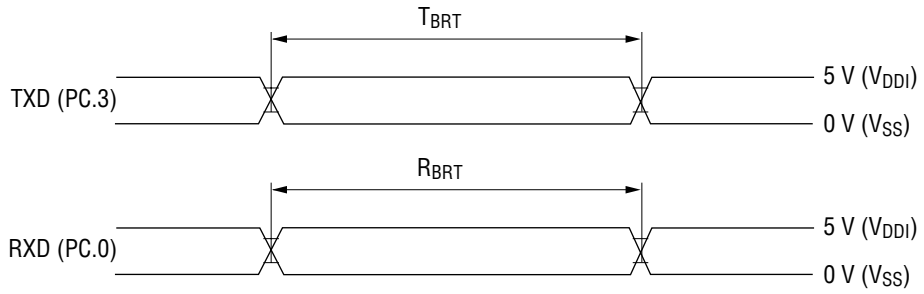

AC Characteristics (Serial Interface, Shift Register)

(V_{DD} = 1.45 to 5.5 V, V_{DDH} = 2.7 to 5.5 V, V_{SS} = 0 V, V_{DDI} = 5.0 V, Ta = 0 to +65°C unless otherwise specified)

Parameter	Symbol	Condition	Min.	Typ.	Max.	Unit
SCLK Input Fall Time	t_f	—	—	—	1.0	µs
SCLK Input Rise Time	t_r	—	—	—	1.0	µs
SCLK Input "L" Level Pulse Width	t_{CWL}	—	0.8	—	—	µs
SCLK Input "H" Level Pulse Width	t_{CWH}	—	0.8	—	—	µs
SCLK Input Cycle Time	t_{CYC}	—	2.0	—	—	µs
SCLK Output Cycle Time	$t_{CYC1(O)}$	CPU in operation state at 32 kHz	—	30.5	—	µs
	$t_{CYC2(O)}$	CPU in operation at 2 MHz V_{DD} = V_{DDH} = 2.9 V to 5.5 V	—	0.5	—	µs
SOUT Output Delay Time	t_{DDR}	C_l = 10 pF	—	—	0.4	µs
SIN Input Setup Time	t_{DS}	—	0.5	—	—	µs
SIN Input Hold Time	t_{DH}	—	0.8	—	—	µs

AC characteristics timing
("H" level = 4.0 V, "L" level = 1.0 V)

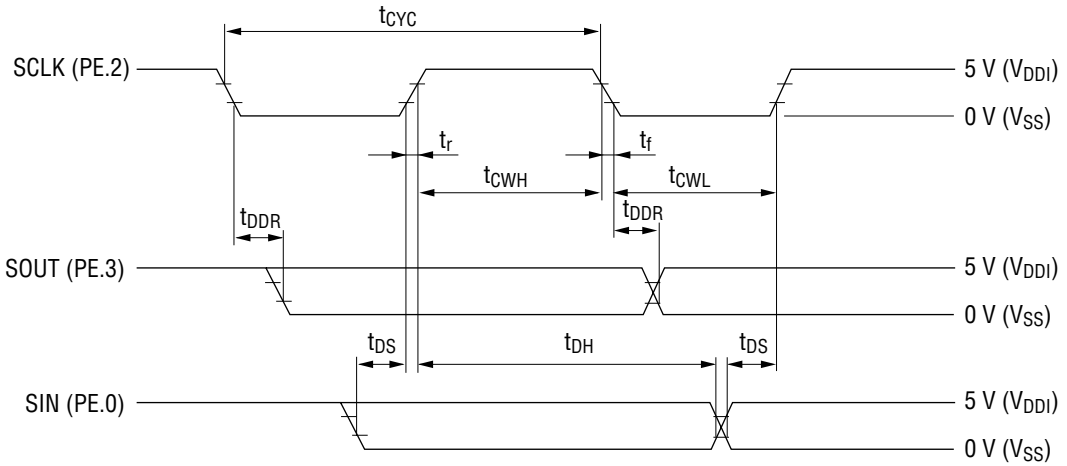

AC Characteristics (External Memory Interface)

(V_{DD} = 1.45 to 5.5 V, V_{DDH} = 2.7 to 5.5 V, V_{SS} = 0 V, V_{DDI} = 5.0 V, Ta = 0 to +65°C unless otherwise specified)

(1) Reading from External Memory

(a) When CPU operates at 32.768 kHz

Parameter	Symbol	Condition	Min.	Typ.	Max.	Unit
Read Cycle Time	t_{RC}	—	—	61.0	—	µs
$\overline{RD}$ Output Delay Time	t_{OE}	—	—	—	5.0	µs
Output Valid Time	t_{OHA}	—	—	—	5.0	µs
External Memory Output Delay Time	t_{DO}	—	—	—	5.0	µs

(b) When CPU operates at 2 MHz (V_{DDH} = 2.9 to 5.5 V)

Parameter	Symbol	Condition	Min.	Typ.	Max.	Unit
Read Cycle Time	t_{RC}	—	1.0	—	—	µs
$\overline{RD}$ Output Delay Time	t_{OE}	—	—	—	100	ns
Output Valid Time	t_{OHA}	—	—	—	100	ns
External Memory Output Delay Time	t_{DO}	—	—	—	150	ns

AC characteristics timing
("H" level = 4.0 V, "L" level = 1.0 V)

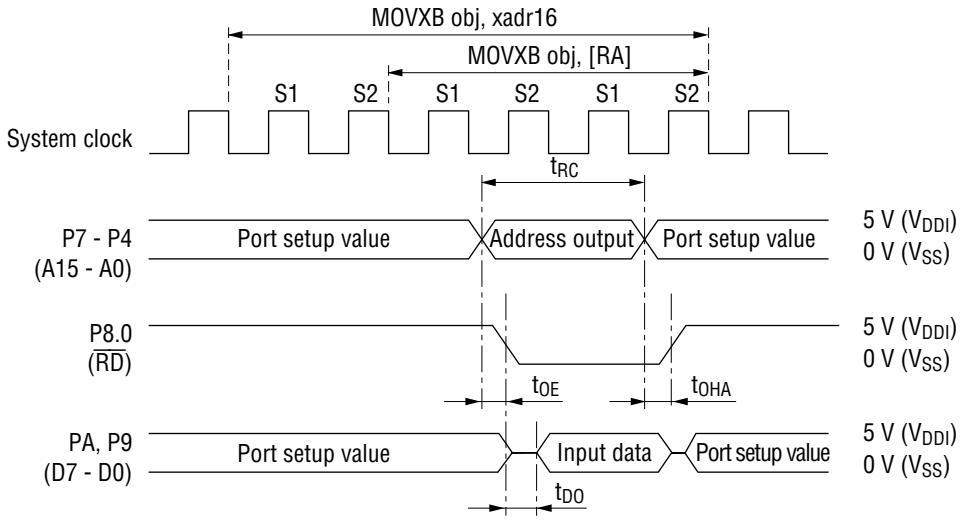

(2) Writing to External Memory

(a) When CPU operates at 32.768 kHz

Parameter	Symbol	Condition	Min.	Typ.	Max.	Unit
Write Cycle Time	t_{WC}	—	—	61.0	—	µs
Address Setup Time	t_{AS}	—	—	30.5	—	µs
Write Time	t_{W}	—	—	15.3	—	µs
Write Recovery Time	t_{WR}	—	—	15.3	—	µs
Data Setup Time	t_{DS}	—	—	45.8	—	µs
Data Hold Time	t_{DH}	—	—	15.3	—	µs

(b) When CPU operates at 2 MHz (V_{DDH} = 2.9 to 5.5 V)

Parameter	Symbol	Condition	Min.	Typ.	Max.	Unit
Write Cycle Time	t_{WC}	—	1.0	—	—	µs
Address Setup Time	t_{AS}	—	0.4	—	—	µs
Write Time	t_{W}	—	0.2	—	—	µs
Write Recovery Time	t_{WR}	—	0.2	—	—	µs
Data Setup Time	t_{DS}	—	0.7	—	—	µs
Data Hold Time	t_{DH}	—	0.2	—	—	µs

AC characteristics timing
("H" level = 4.0 V, "L" level = 1.0 V)

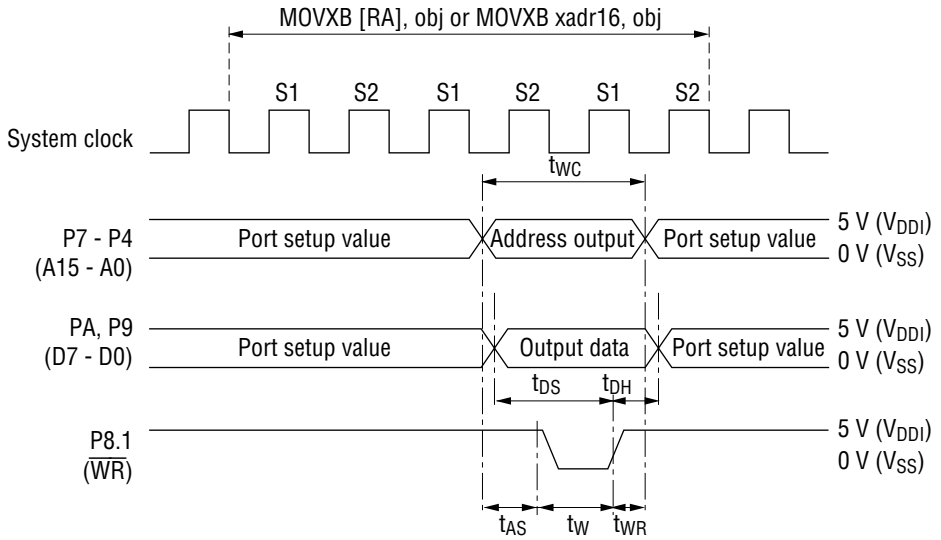

(3) PROM Operations (Applies to Both the Cases of Using and Not Using Backup)

ABSOLUTE MAXIMUM RATINGS

(V_{SS} = 0 V)

Parameter	Symbol	Condition	Rating	Unit
PROM Power Source Voltage	V_{CC}	$V_{CC} = V_{DD} = V_{DDH} = V_{DDI}$ Ta = 25°C	–0.3 to +6.7	V
Program Voltage	V_{PP}	Ta = 25°C	–0.3 to +14.0	V
PROM Input Voltage	V_I	V_{CC} input Ta = 25°C	–0.3 to V_{CC} + 0.3	V
PROM Output Voltage	V_O	V_{CC} output Ta = 25°C	–0.3 to V_{CC} + 0.3	V
Storage Temperature	T_{STG}	—	–55 to +150	°C

RECOMMENDED OPERATING CONDITIONS

(V_{SS} = 0 V)

Parameter	Symbol	Condition	Range	Unit
Operating Temperature	T_{OPEP}	—	0 to +65	°C
V_{CC} Power Supply Voltage	V_{CC}	—	4.75 to 5.25	V
V_{PP} Power Supply Voltage	V_{PP}	When data is read	4.75 to 5.25	V
		When data is written	12.0 to 13.5	V
Input Voltage	V_{IH}	—	4.0 to V_{CC}	V
	V_{IL}	—	0 to 1.0	V

ELECTRICAL CHARACTERISTICS

(1) Read Operation

DC Characteristics

(V_{CC} = V_{PP} = 5 V ±5%, Ta = 25°C ±5°C unless otherwise specified)

Parameter	Symbol	Condition	Min.	Typ.	Max.	Unit
V_{CC} Power Supply Current (Standby)	I_{CC1}	$\overline{CE}$ = V_{IH}	—	—	35	mA
V_{CC} Power Supply Current (Operating)	I_{CC2}	$\overline{CE}$ = V_{IL}	—	—	100	mA
Input Voltage	V_{IH}	—	4.0	—	V_{CC}	V
	V_{IL}	—	0	—	1.0	V
Output Current	I_{OH}	V_{OH} = V_{CC} – 0.5 V	–8	–4	–2	mA
	I_{OL}	V_{OL} = 0.5 V	2	4	8	mA

AC Characteristics

(V_{CC} = 5 V ±5%, V_{PP} = V_{CC}, Ta = 0 to +65°C unless otherwise specified)

Parameter	Symbol	Condition	Min.	Typ.	Max.	Unit
Address Access Time	t_{ACC}	$\overline{OE}$ = $\overline{CE}$ = V_{IL}	—	—	120	ns
$\overline{CE}$ Access Time	t_{CE}	$\overline{OE}$ = V_{IL}	—	—	120	ns
$\overline{OE}$ Access Time	t_{OE}	$\overline{CE}$ = V_{IL}	—	—	50	ns
Output Disable Time	t_{DF}	$\overline{CE}$ = V_{IL}	0	—	40	ns

Measurement conditions:

Input pulse level ..... 0.45 V to 4.55 V
Input rise/fall time ..... 5 ns
Threshold level ..... input 0.8 V, 2 V/output 0.8 V, 2 V

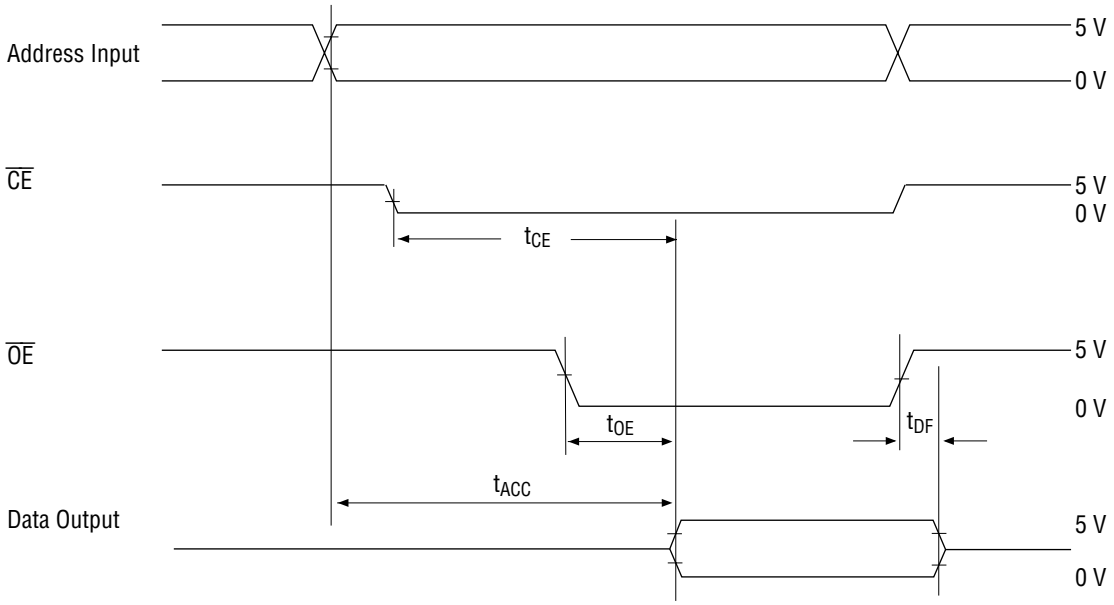
Address Input
5 V
0 V
CE
5 V
0 V
tCE
OE
5 V
0 V
tOE
tDF
tACC
Data Output
5 V
0 V

(2) Write Operation

DC Characteristics

(V_{SS} = 0 V, V_{CC} = 5 V ±5%, V_{PP} = 12.5 V ±0.5 V, Ta = 25°C ±5°C unless otherwise specified)

Parameter	Symbol	Condition	Min.	Typ.	Max.	Unit
V_{PP} Power Supply Current	I_{PP}	$\overline{CE}$ = V_{IH}	—	—	50	mA
V_{CC} Power Supply Current	I_{CC}	—	—	—	100	mA
Input Voltage	V_{IH}	—	4.0	—	V_{CC}	V
	V_{IL}	—	0	—	1.0	V
Output Current	I_{OH}	V_{OH} = V_{CC} – 0.5 V	–8	–4	–2	mA
	I_{OL}	V_{OL} = 0.5 V	2	4	8	mA

AC Characteristics

(V_{SS} = 0 V, V_{CC} = 5 V ±5%, V_{PP} = 12.5 V ±0.5 V, Ta = 25°C ±5°C unless otherwise specified)

Parameter	Symbol	Condition	Min.	Typ.	Max.	Unit
Address Setup Time	t_{AS}	—	2.0	—	—	µs
$\overline{OE}$ Setup Time	t_{OES}	—	2.0	—	—	µs
Data Setup Time	t_{DS}	—	2.0	—	—	µs
Address Hold Time	t_{AH}	—	0	—	—	µs
Data Hold Time	t_{DH}	—	2.0	—	—	µs
$\overline{OE}$ Output Floating Delay Time	t_{DFP}	—	0	—	130	ns
V_{PP} Power Source Setup Time	t_{VS}	—	2.0	—	—	µs
Initial Program Pulse Width	t_{PW}	6 V ±0.25 V	0.95	1.0	1.05	ms
Additional Program Pulse Width	t_{OPW}	6 V ±0.25 V	2.85	—	78.75	ms
$\overline{OE}$ Output Effective Delay Time	t_{OE}	—	—	—	150	ns

Measurement conditions:

Input pulse level ..... 0.45 V to 4.55 V
Input rise/fall time ..... less than 20 ns
Threshold level ..... input 0.8 V, 2 V/output 0.8 V, 2 V

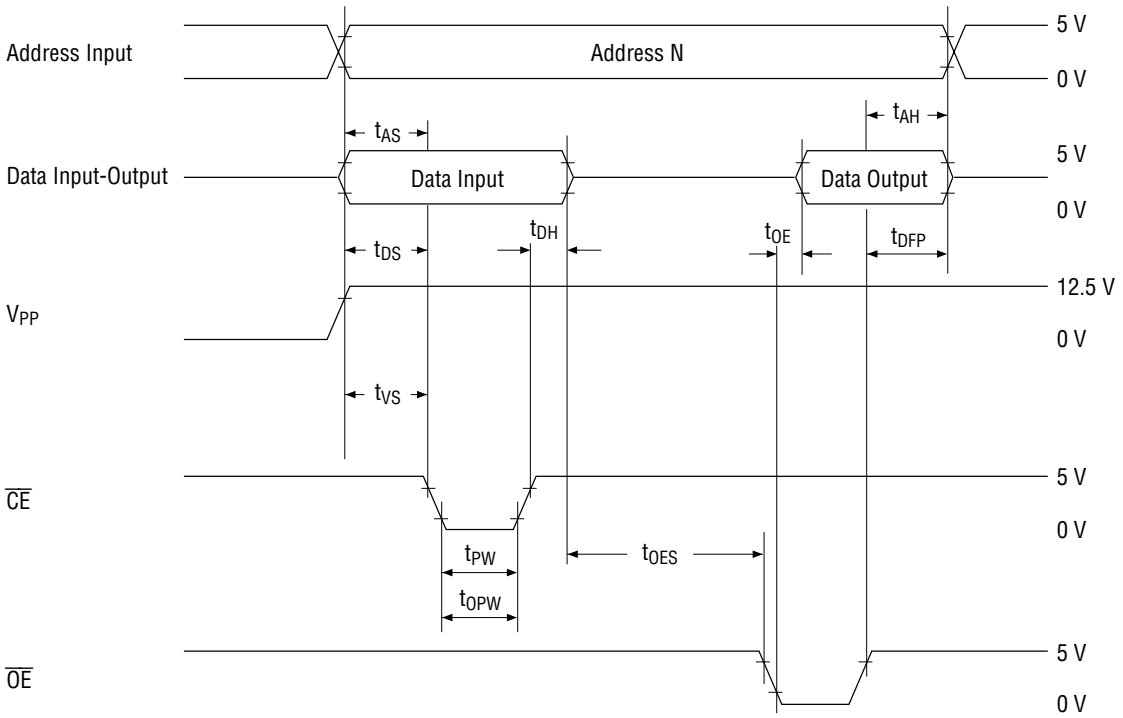
Address Input
Address N
5 V
0 V
tAS
tAH
Data Input-Output
Data Input
Data Output
5 V
0 V
tDH
tOE
tDS
tDFP
VPP
12.5 V
0 V
tVS
CE
5 V
0 V
tPW
tOES
tOPW
OE
5 V
0 V

APPLICATION CIRCUITS

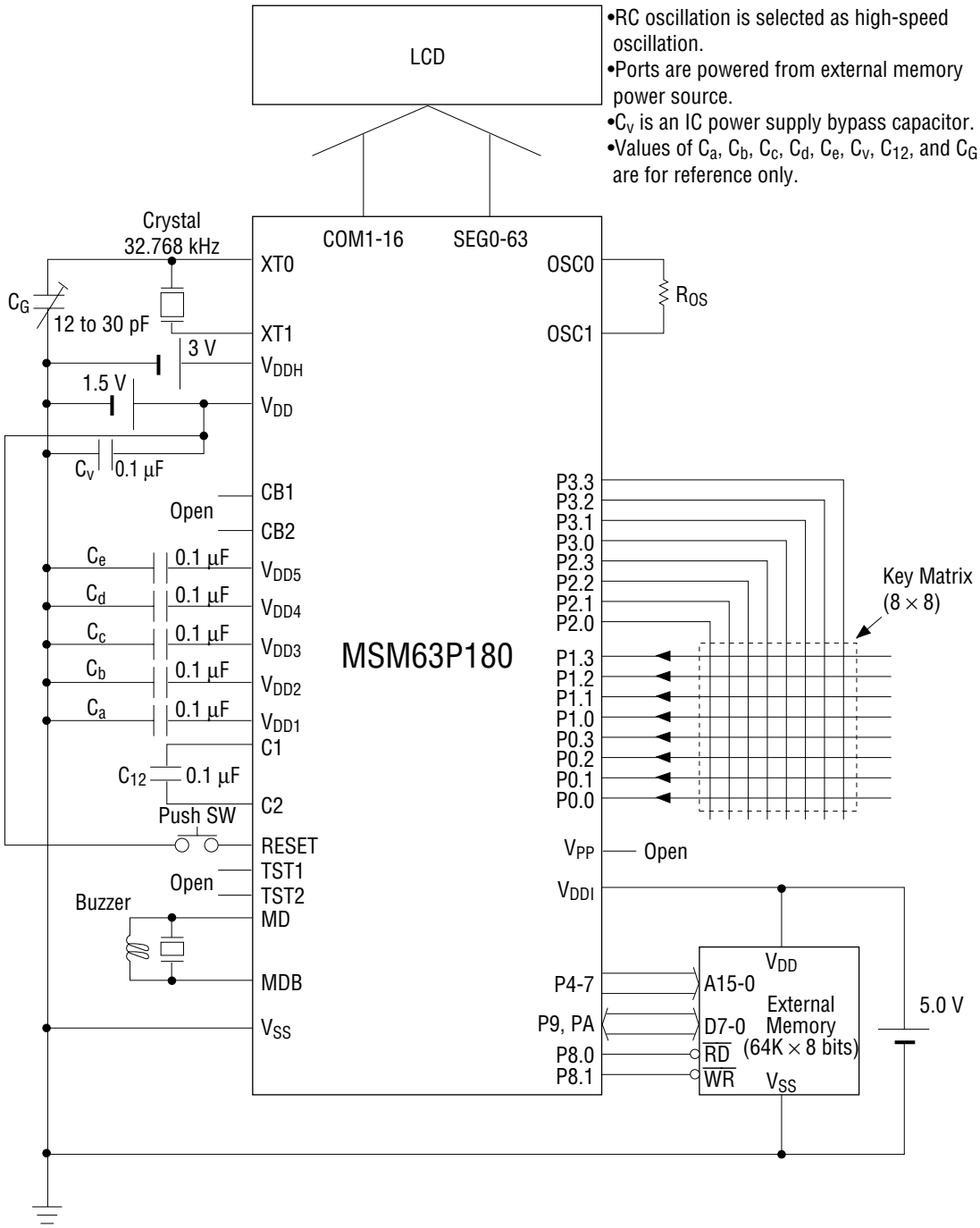

Note: V_{DDI} is the power supply pin for the input, output, and input-output ports.
Be sure to connect the V_{DDI} pin either to the positive power supply pin (V_{DD}) of this device or to the positive power supply pin of the external memory.

Application Circuit Example with Power Supply Backup

APPLICATION CIRCUITS (continued)

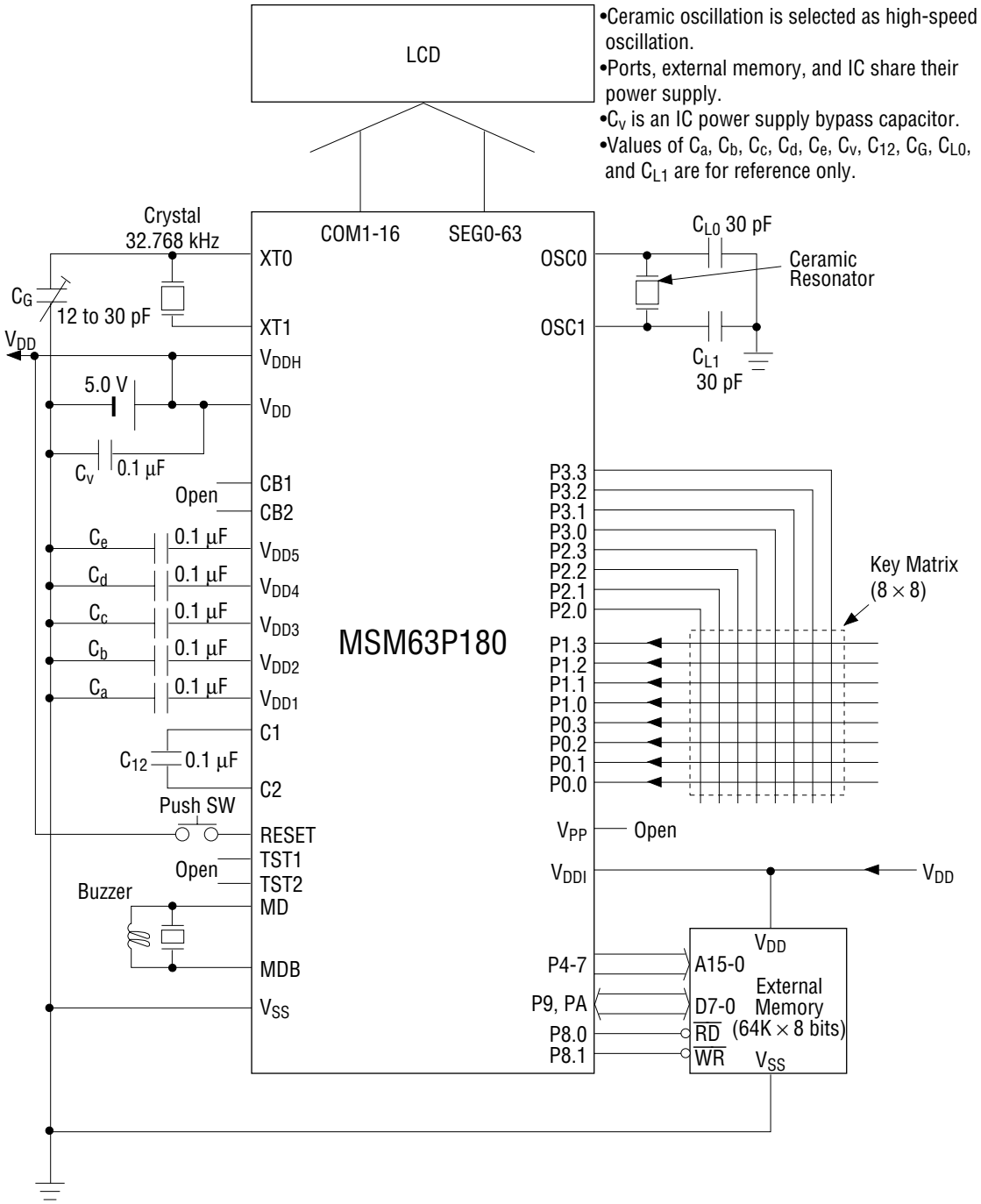

Note: V_{DDI} is the power supply pin for the input, output, and input-output ports.
Be sure to connect the V_{DDI} pin either to the positive power supply pin (V_{DD}) of this device or to the positive power supply pin of the external memory.

Application Circuit Example with No Power Supply Backup

PACKAGE DIMENSIONS

(Unit : mm)

LQFP176-P-2424-0.50-BK

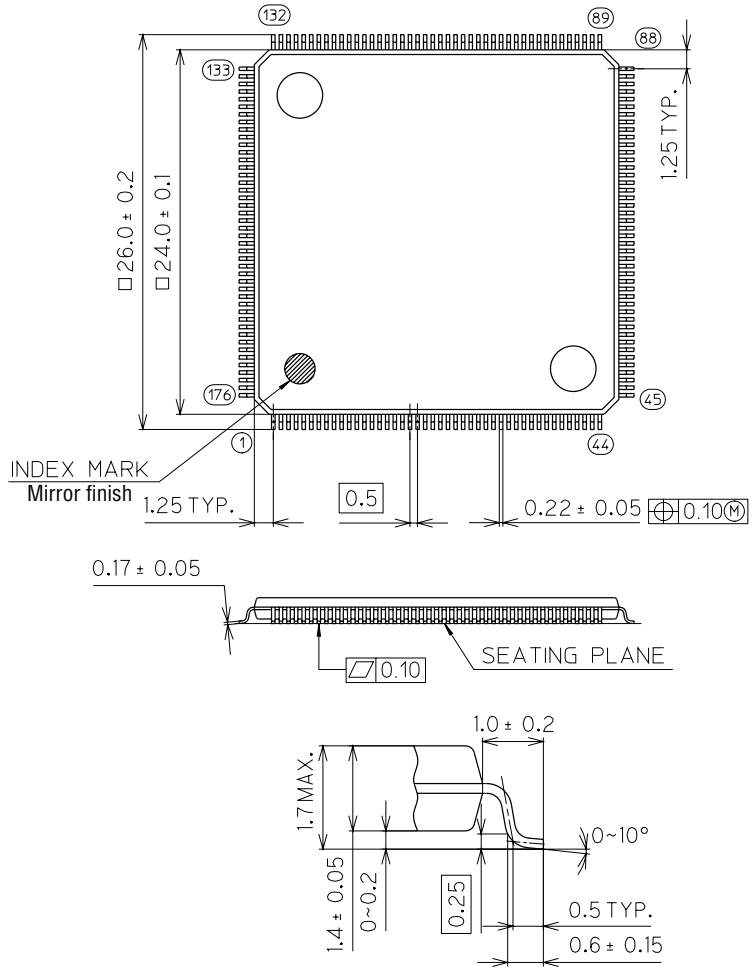

Package material	Epoxy resin
Lead frame material	42 alloy
Pin treatment	Solder plating
Solder plate thickness	5 μm or more
Package weight (g)	1.87 TYP.

Notes for Mounting the Surface Mount Type Package

The SOP, QFP, TSOP, SOJ, QFJ (PLCC), SHP and BGA are surface mount type packages, which are very susceptible to heat in reflow mounting and humidity absorbed in storage.
Therefore, before you perform reflow mounting, contact Oki's responsible sales person for the product name, package name, pin number, package code and desired mounting conditions (reflow method, temperature and times).