Discontinued Product

OKI Semiconductor

MSM53V1655F

524,288-Double Words x 32-bit or 1,048,576-Words x 16-bit MaskROM
4Double Words x 32-Bit or 8Words x 16-Bit/Page Mode MASKROM

DESCRIPTION

The OKI MSM53V1655F is a 524,288-double words x 32-bit or 1,048,576-words x 16-bit CMOS Mask ROM with an asynchronous page read mode. Each page is organized 4double words x 32-bit or 8 words x 16-bit. It operates on a single 3.3V power supply and is TTL compatible. The chip's asynchronous I/O requires no external clock assuring easy operation. A power-down mode provides low power dissipation when the chip is not selected. The CE and OE pins are provided as control signals that permit three-stated output allowing easy memory expansion on a system bus.The MSM531655F is suited for use as large capacity fixed memory for microcomputers and data terminals.

FEATURES

- Single 3.3V power supply
- 524,288-double words x 32-bit / 1,048,576-words x 16-bit
- 4-double words(A1,A0) or 8-words(A1,A0,A-1) / Page
- Access time
  100ns Max (Normal access)
  30ns Max (Page access)
- Input/Output TTL compatible
- Tri-State output configurations
- Internal powerdown function
- Packages:
  70-PIN PLASTIC SSOP (SSOP70-P-500-K)
  70-PIN PLASTIC TSOP (TSOP70-P-400/0.65)
- Pin compatible OTP available

PIN CONFIGURATION

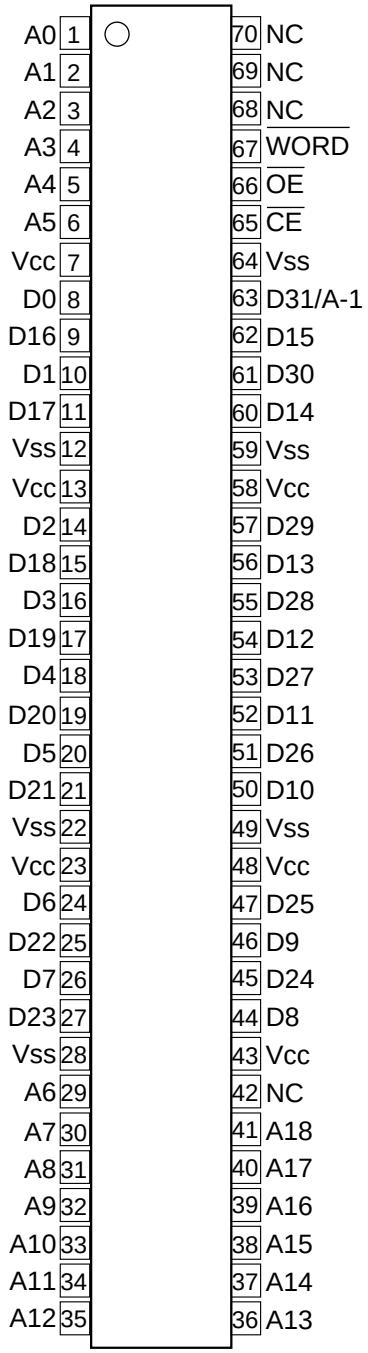

Pin Name	Function
D31/A-1	Data output / address input
A0 to A18	Address input
D0 to D30	Data output
$\overline{CE}$	Chip enable
$\overline{OE}$	Output enable
$\overline{WORD}$	Mode switch (H:DW/L:W)
V_{CC}, V_{SS}	Power supply

BLOCK DIAGRAM

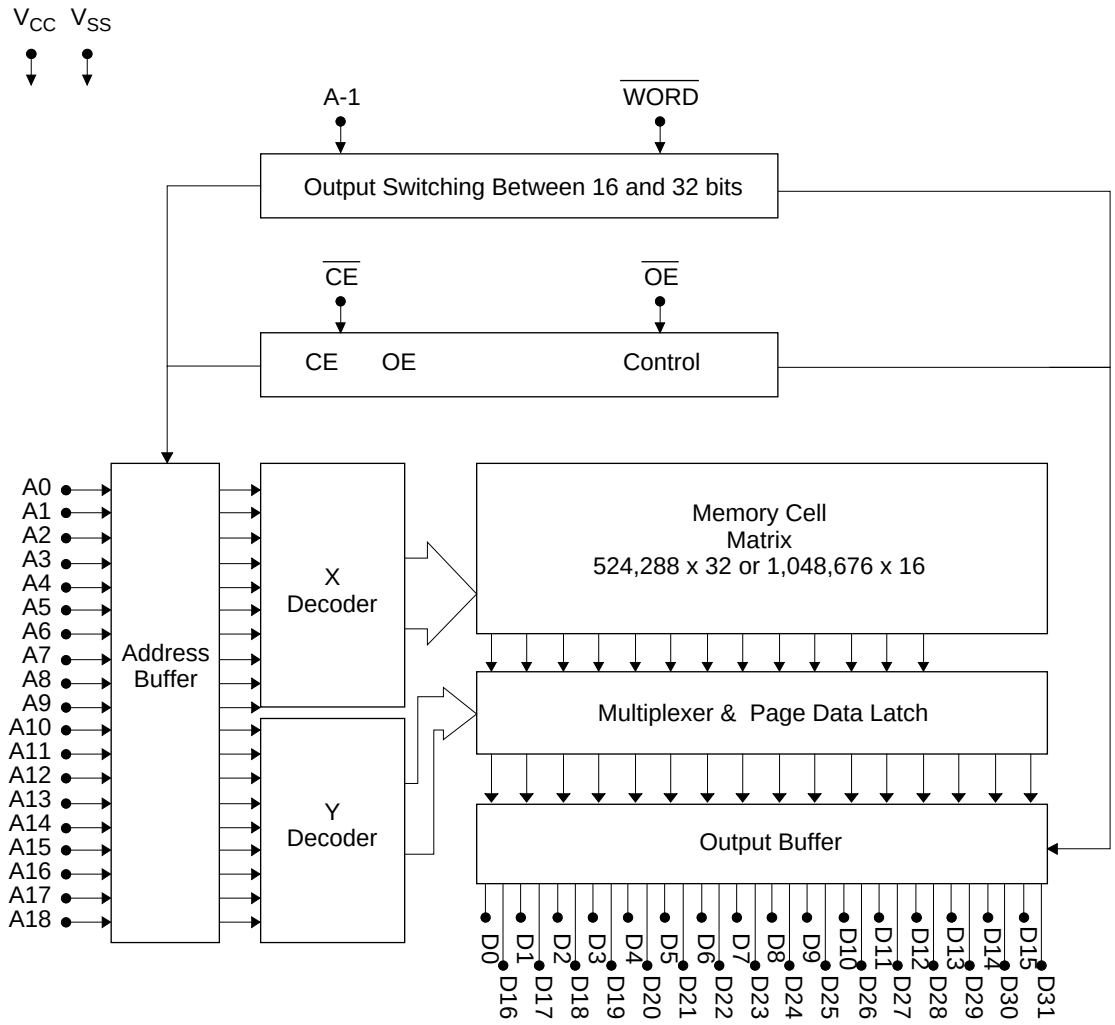

FUNCTION TABLE

$\overline{CE}$	$\overline{OE}$	$\overline{BYTE}$	A-1/D31	D0—D15	D16—D31	D_{OUT} Mode	LSB	MSB
H	X	X	X	Hi-Z	Hi-Z	Hi-Z	—	—
L	H	X	X	Hi-Z	Hi-Z			
L	L	H	Input Inhibited (D31)	D0 to D15	D16 to D31	32 bit	A0	A18
L	L	H	Input Inhibited (D31)	D0 to D15	D16 to D31	32 bit(Page Mode)	A0	A1
L	L	L	L	D0 to D15	Hi-Z	16 bit	A-1	A18
L	L	L	H	D16 to D31	Hi-Z			
L	L	L	L	D0 to D15	Hi-Z	16 bit(Page Mode)	A-1	A1
L	L	L	H	D16 to D31	Hi-Z			

ABSOLUTE MAXIMUM LIMITS

Parameter	Symbol	Conditions	Limits	Unit
Power Supply Voltage	V_{CC}	to V_{SS}	–0.3 to 7	V
Input Voltage	V_I		–0.3 to V_{CC} + 0.5	V
Output Voltage	V_O		–0.3 to V_{CC} + 0.5	V
Power Dissipation	P_D	Per Package T_{opr} = 25°C	1.0	W
Operating Temperature	T_{opr}	—	0 to 70	°C
Storage Temperature	T_{stg}	—	–55 to 150	°C

RECOMMENDED OPERATING CONDITIONS

Parameter	Symbol	Conditions	Limits			Unit
			Min.	Typ.	Max.	
Power Supply Voltage	V_{CC}	—	3.0	3.3	3.6	V
	V_{SS}	—	0.0	0.0	0.0	V
"H" Input Voltage	V_{IH}	—	2.2	3.3	V_{CC} + 0.5	V
"L" Input Voltage	V_{IL}	—	–0.3	0.0	0.8	V
Operating Temperature	T_{opr}	—	0	—	70	°C

DC CHARACTERISTICS

(V_{CC} = 3.3V±0.3V, Ta = 0 to 70°C)

Parameter	Symbol	Conditions	Limits			Unit
			Min.	Typ.	Max.	
"H" Output Voltage	V_{OH}	I_{OH} = –400uA	2.4	—	—	V
"L" Output Voltage	V_{OL}	I_{OH} = 1.0mA	—	—	0.4	V
Input Leakage Current	I_{LI}	V_I = 0 to V_{CC}	–10	—	10	µA
Output Leakage Current	I_{LO}	V_O = 0 to V_{CC} CE = $V_{IH\ MIN}$	–10	—	10	µA
Power Supply Current (Operating)	I_{CC}	CE = V_{IL}, OE = V_{IH}, t_C = 100ns	—	—	100	mA
Power Supply Current (Standby)	I_{CCS}[1]	CE = V_{CC}–0.2V	—	—	50	µA
	I_{CCS}	CE = $V_{IH\ MIN}$	—	—	500	µA

AC CHARACTERISTICS

Test conditions

Parameter	Conditions
Input Signal Level	V_{IH}=3.0V, V_{IL}=0.0V
Transtion Time	t_r=t_f=5ns
Timing Reference Level	Input Voltage=1.5V Output Voltage=0.8V&2.0V
Load Condition	CL=100pF+1TTL

Read Cycle

(Ta = 0 to 70°C)

Parameter	Symbol	Conditions	Limits			Unit
			Min.	Typ.	Max.	
Random Access Cycle time	t_C	—	100	—	—	ns
Random Address Access time	t_{ACC}	—	—	—	100	ns
Page Set up time	t_{PSET}	—	100	—	—	ns
Page Access Cycle time	t_{PC}	—	30	—	—	ns
Page Access time	t_{PAC}	—	—	—	30	ns
$\overline{CE}$ Access time	t_{CE}	—	—	—	100	ns
$\overline{OE}$ Access time	t_{OE}	—	—	—	30	ns
$\overline{CE}$ Output Disable time	t_{CHZ}	—	0	—	30	ns
$\overline{OE}$ Output Disable time	t_{OHZ}	—	0	—	25	ns
Output Hold time	t_{OH}	—	0	—	—	ns

Read Cycle (Note1)

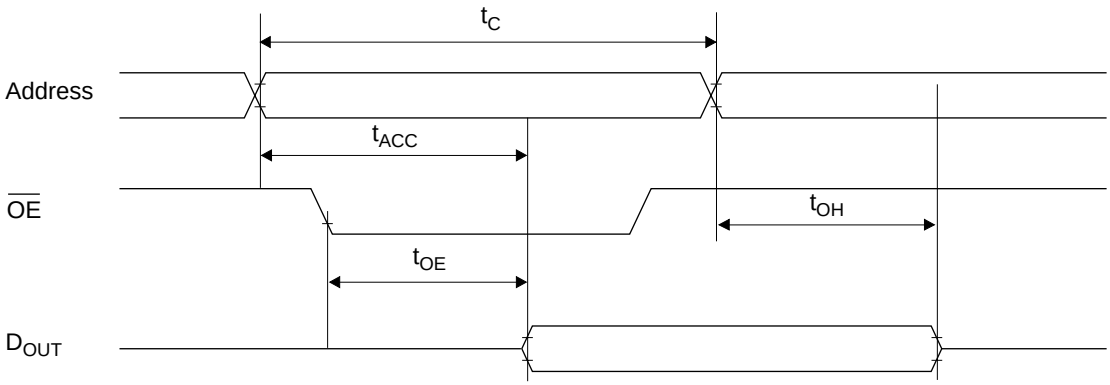

Read Cycle (Note2)

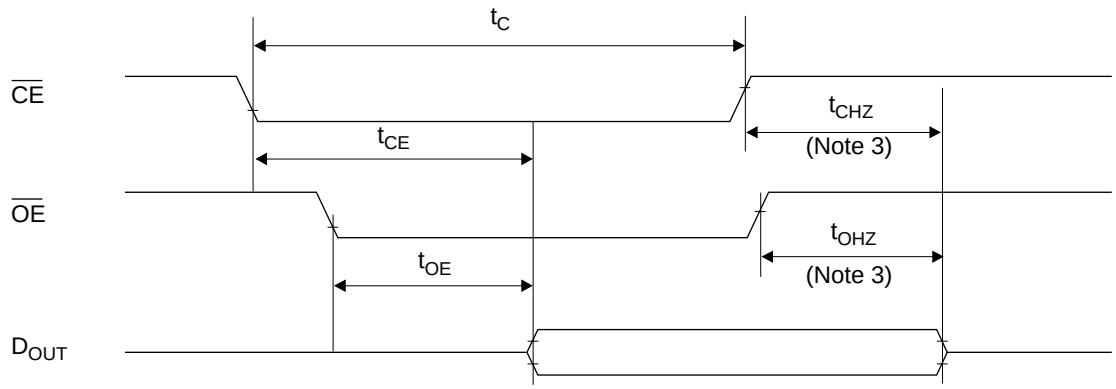

Page Mode Read Cycle (Note4)

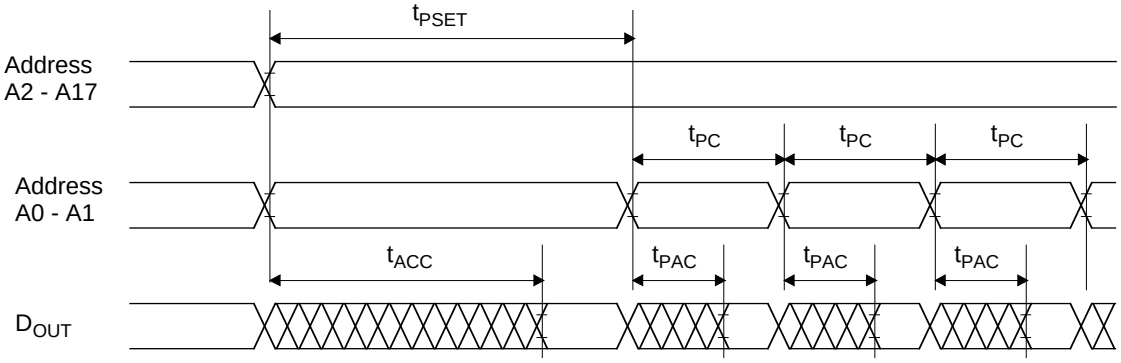

Note) 1. CE is low level.
2. Address is fixed before or at the same time when CE level falls.
3. t_{CHZ} & t_{OHZ} indicate the time until floating. They are not determined by the output level.
4. CE is low level and OE is low level.

I/O CAPACITANCE

Parameter	Symbol	Conditions	Rated Value			Unit
			Min.	Typ.	Max.	
Input Capacitance	C_I	V_I=0V	—	—	8	pF
Output Capacitance	C_O	V_O=0V	—	—	10	pF

NOTICE

The information contained herein can change without notice owing to product and/or technical improvements. Before using the product, please make sure that the information being referred to is up-to-date.

The outline of action and examples for application circuits described herein have been chosen as an explanation for the standard action and performance of the product. When planning to use the product, please ensure that the external conditions are reflected in the actual circuit, assembly, and program designs.

When designing your product, please use our product below the specified maximum ratings and within the specified operating ranges including, but not limited to, operating voltage, power dissipation, and operating temperature.

Oki assumes no responsibility or liability whatsoever for any failure or unusual or unexpected operation resulting from misuse, neglect, improper installation, repair, alteration or accident, improper handling, or unusual physical or electrical stress including, but not limited to, exposure to parameters beyond the specified maximum ratings or operation outside the specified operating range.

Neither indemnity against nor license of a third party's industrial and intellectual property right, etc. is granted by us in connection with the use of the product and/or the information and drawings contained herein. No responsibility is assumed by us for any infringement of a third party's right which may result from the use thereof.

The products listed in this document are intended for use in general electronics equipment for commercial applications (e.g., office automation, communication equipment, measurement equipment, consumer electronics, etc.). These products are not authorized for use in any system orapplication that requires special or enhanced quality and reliability characteristics nor in any system or application where the failure of such system or application may result in the loss or damage of property, or death or injury to humans. Such applications include, but are not limited to, traffic and automotive equipment, safety devices, aerospace equipment, nuclear power control, medical equipment, and life-support systems.

Certain products in this document may need government approval before they can be exported to particular countries. The purchaser assumes the responsibility of determining the legality of export of these products and will take appropriate and necessary steps at their own expense for these.

No part of the contents cotained herein may be reprinted or reproduced without our prior permission.

All brand, company and product names are the trademarks or registered trademarks of their respective owners.

Copyright 1998 Oki Electric Industry Co., Ltd.

ADDRESSES & SEMICONDUCTOR WEB SITES

OKI Electric Industry Co., Ltd.,
Device Business Group,
10-3, Shibaura, 4-chome,
Minato-ku, Tokyo 108, Japan,
Tel.: +81-(0)3-5445-6327,
Fax.: +81-(0)3-5445-6328,
http://www.oki.co.jp/OKI/DBG/english/index.htm
(NOTE: URL is case sensitive)

OKI Semiconductor Group,
785 North Mary Avenue,
Sunnyvale, CA 94086, U.S.A.,
Tel.: +1-408-720-1900,
Fax.: +1-408-720-1918,
http://www.okisemi.com/

OKI Electric Europe GmbH,
Head Office Europe,
Hellersbergstrasse 2,
D-41460 Neuss, Germany,
Tel: +49-2131-15960,
Fax: +49-2131-103539,
http://www.oki-europe.de/

OKI Electronics (Hong Kong) Ltd.,
Suite 1901-1&19, Tower 3,
China Hong Kong City,
33 Canton Road, Tsimshatsui,
Kowloon, Hong Kong,
Tel.: +852-2-736-2336,
Fax.: +852-2-736-2395

OKI Semiconductor (Asia) Pte. Ltd.,
78 Shenton Way 09-01,
Singapore 0207,
Tel.: +65-221-3722,
Fax.: +65-323-5376

OKI Semiconductor (Asia) Pte. Ltd.,
Taipei Branch,
7th Fl. No.260, Tun Hwa North Road,
Taipei, Taiwan, R.O.C.,
Sumitomo-Flysun Building,
Tel.: +886-2-2719-2561,
Fax.: +886-2-2715-2892
http://www.oki.net.tw/

For further information, please contact:

OKI
People To People Technology