MIL-PRF-38534 AND 38535 CERTIFIED FACILITY

10 AMP, 55V, 3 PHASE BRUSHLESS MOTOR SPEED CONTROLLER

4310

FEATURES:

- 55 Volt Motor Supply Voltage
- 10 Amp Output Switch Capability
- Shoot-Through/Cross Conduction Protection
- Hall Sensing and Commutation Circuitry on Board
- User Programable Current Limit
- Tach Out-Closed Loop Control
- Available With 3 Lead Configurations
- Contact MSK for MIL-PRF-38534 Qualification Status

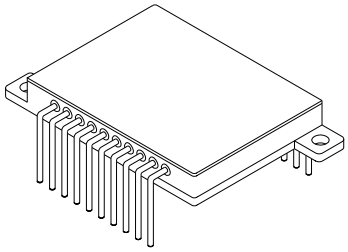

DESCRIPTION:

The MSK4310 is a complete 3 Phase Brushless Motor Speed Controller in an electrically isolated hermetic package. The hybrid is capable of 10 amps of output current and 55 volts of DC bus voltage. Included is all of the bridge drive circuitry, hall sensing circuitry and commutation circuitry. Also included is a user programable current limit circuit and a tachometer circuit for closed loop operation. The MSK4310 has good thermal conductivity of the output switches due to isolated substrate/package design that allows direct heat sinking of the hybrid without insulators.

EQUIVALENT SCHEMATIC

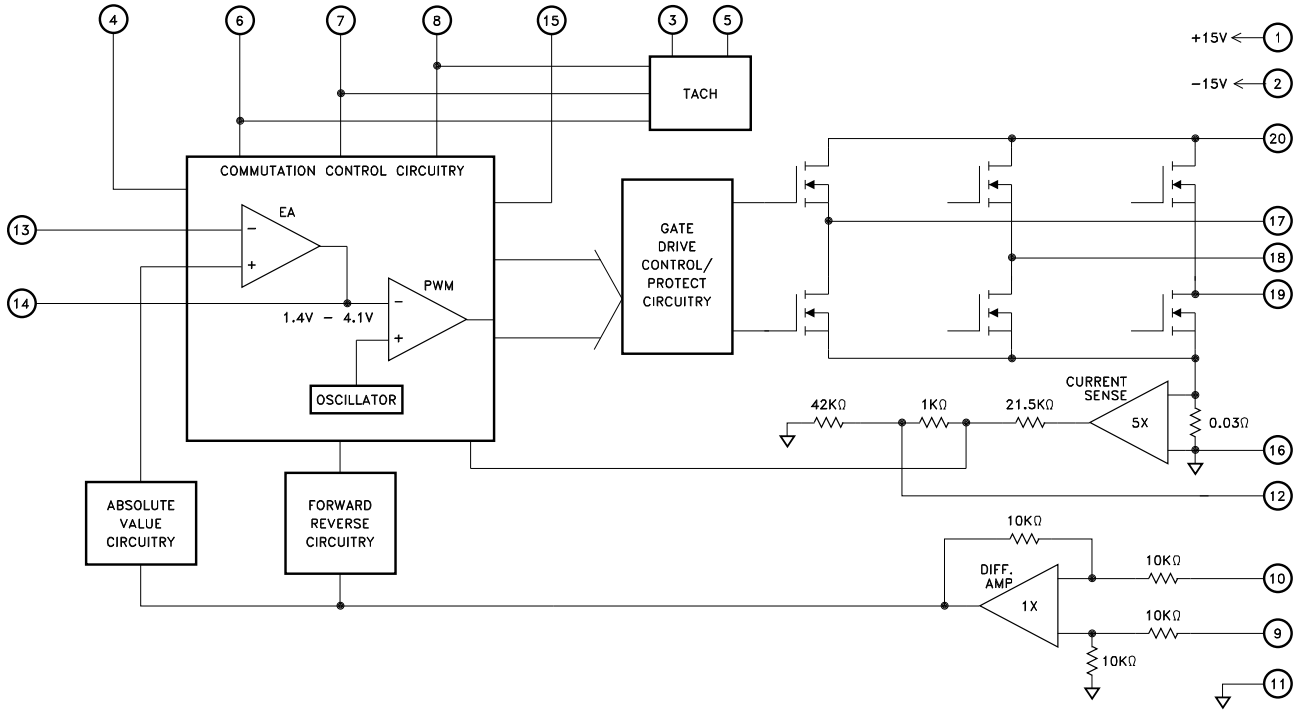

TYPICAL APPLICATIONS

- Fan/Blower Speed Control
- Azimuth/Elevation Antenna Control
- Optical Tracking Control
- Robot Velocity Control

PIN-OUT INFORMATION

1	+15V INPUT	20	V +
2	-15V INPUT	19	CØ
3	TACH OUT	18	BØ
4	REF OUT	17	AØ
5	TACH RC	16	GND
6	HALL A	15	BRAKE
7	HALL B	14	E/A OUT
8	HALL C	13	-E/A
9	SPEED - COMMAND	12	CURRENT LIMIT ADJUST
10	SPEED + COMMAND	11	SIGNAL GND

ABSOLUTE MAXIMUM RATINGS ⑦

V +	High Voltage Supply ⑧	+55V	
V_{IN}	Speed Command (+,-)	±15VIN	
V_{IND}	Hall A,B,C,Brake	+V REF	
I_{OUT}	Continuous Output Current	10A	
I_{pK}	Peak Output Current	15A	
$+15V_{IN}$	+15 Volt Input Voltage	+16V	
$-15V_{IN}$	-15 Volt Input Voltage	-16V	
Θ_{JC}	Thermal Resistance (@ 125°C)	4.8°C/W	
T_{ST}	Storage Temperature Range ⑨	-65°C to +150°C	
T_{LD}	Lead Temperature Range (10 Seconds)	+300°C	
T_C	Case Operating Temperature		
T_J	MSK4310	-40°C to +85°C	
	MSK4310H	-55°C to +125°C	
	Junction Temperature	+150°C	

ELECTRICAL SPECIFICATIONS

Parameter	Test Conditions	Group A Subgroup	MSK4310H ③			MSK4310 ③			Units
			Min.	Typ.	Max.	Min.	Typ.	Max.	
PWM									
Clock Frequency		4	21	25	29	20	25	30	KHz
		5,6	20	25	30	-	-	-	KHz
POWER SUPPLY REQUIREMENTS									
+15 Volt Input Current		1	-	37	50	-	37	60	mA
		2,3	-	41	60	-	-	-	mA
-15 Volt Input Current		1	-	8	15	-	8	18	mA
		2,3	-	9	20	-	-	-	mA
HALL INPUTS									
VIL ②		-	-	-	0.8	-	-	0.8	VOLTS
VIH ②		-	3.0	-	-	3.0	-	-	VOLTS
ANALOG SECTION									
Speed Command Input Range	E/A DC Gain=1, Positive Command	1	1.2	-	4.5	1.2	-	4.5	VOLTS
Speed Command Input Range	E/A DC Gain=1, Negative Command	1	-1.2	-	-4.5	-1.2	-	-4.5	VOLTS
Speed Command Input Current ②	V_{IN}=5V	-	-	-	1.5	-	-	1.5	mA
REFERENCE OUTPUT VOLTAGE									
Reference Voltage	@ 1mA	1	5.9	6.24	6.5	5.82	6.24	6.57	VOLTS
		2,3	5.82	-	6.57	-	-	-	VOLTS
ERROR AMP									
Input Offset Voltage ②		-	-	0.4	10	-	0.4	10	mV
Input Offset Current ②		-	-	8.0	500	-	8.0	500	nA
Input Bias Current ②		-	-	-46	-1000	-	-46	-1000	nA
Input Common Mode Voltage Range ②	V_O=3V, R_L=15K	-	0	-	V_{REF}	0	-	V_{REF}	V
Open-Loop Voltage Gain ②		-	70	80	-	70	80	-	db
Input Common Mode Rejection Ratio ②		-	55	86	-	55	86	-	db
Power Supply Rejection Ratio ②		-	65	105	-	65	105	-	db
OUTPUT SECTION									
Voltage Drop Across Bridge (1 Upper & 1 Lower) ②	10 AMPS	-	-	0.8	-	-	0.8	-	VOLTS
Voltage Drop Across Bridge (1 Upper & 1 Lower) ②	10 AMPS @ 150°C Junction	-	-	1.6	1.92	-	1.6	1.92	VOLTS
Leakage Current ②	All switches off, V+=44V, 150°C Junction	-	-	-	750	-	-	750	µA
Diode VSD ②		-	-	-	1.6	-	-	1.6	VOLTS
trr ②		-	-	86	-	-	86	-	nSec
Dead Time ②		-	-	2	-	-	2	-	µSec
TACH OUT									
Output Voltage High State	I Source = 5mA	-	3.60	3.95	4.20	3.60	3.95	4.20	V
Output Voltage Low State	I Sink = 10mA	-	-	0.25	0.50	-	0.25	0.50	V
Output Pulse Width ①	R/C=20K/0.01uF	4	150	200	250	150	200	250	µSec
CURRENT LIMIT									
Current Limit	Current Limit Adjust Pin=Open	1,2,3	0.4	1	1.60	0.3	1	1.70	Amps

NOTES:

① ±15V INPUT = ±15V, V+ = 28V, BRAKE = GND unless otherwise specified.
② Guaranteed by design but not tested. Typical parameters are representative of actual device performance but are for reference only.
③ Industrial devices shall be tested to subgroups 1 and 4 unless otherwise specified.
④ Military grade devices ("H" Suffix) shall be 100% tested to Subgroups 1, 2, 3 and 4.
⑤ Subgroups 5 and 6 testing available upon request.
⑥ Subgroup 1, 4 TA = TC = +25°C
2, 5 TA = TC = +125°C
3, 6 TA = TC = -55°C
⑦ Continuous operation at or above absolute maximum ratings may adversely effect the device performance and/or life cycle.
⑧ When applying power to the device, apply the low voltage followed by the high voltage or alternatively,apply both at the same time. Do not apply high voltage without low voltage present.
⑨ Internal solder reflow temperature is 180°C, do not exceed.

APPLICATION NOTES

MSK 4310 PIN DESCRIPTIONS

V+ - is the power connection from the hybrid to the bus. The external wiring to the pin should be sized according to the RMS current required by the motor. This pin should be bypassed by a high quality monolithic ceramic capacitor for high frequencies and enough bulk capacitance to keep the V+ power supply from drooping.

AØ OUT, BØ OUT, CØ OUT-are the connections to the motor phase windings from the bridge output. The wiring to these pins should be sized according to the motor current requirements. There are no internal short circuit protection provisions for these output pins in the hybrid. Shorts to V+ or ground from these pins must be avoided or the bridge will be destroyed.

GND- is the power return connection from the hybrid to the bus. All ground returns internal to the hybrid connect to this point in a star configuration. All external ground connections to this point should be made in a similar fashion. The V+ capacitors should be returned to this pin as close as possible. Wire sizing to this pin connection should be made according to the required current.

SIG GND - is the ground pin that connects to the ground plane for all low power circuitry inside the device.

+15 V INPUT - is the pin for applying +15 volts to run the low power control circuitry inside the hybbrid. This pin should be bypassed to the signal ground pin using a high quality 10μF tantalum capacitor and a 0.1μF ceramic capacitor as close to these pins as possible.

-15 V INPUT - is the pin for applying -15 volts to run the low power control circuitry inside the hybrid. This pin should be bypassed to the signal ground pin using a high quality 10μF tantalum capacitor and a 0.1μF ceramic capacitor as close to these pins as possible.

BRAKE - is the pin for commanding the output bridge into a motor brake mode. When this pin is taken low, normal operation of the hybrid proceeds. When this pin is taken high, the three high side switches in the bridge turn off and the three lowside switches turn fully on. This will cause rapid deceleration of the motor and will cease motor operation until taken low again. The pin left open is internally pulled high.

HALL A, B & C - are the hall input pins from the hall devices in the motor. These pins are internally pulled up to 6.25 volts. The halls reflect a 120/240 degree commutation scheme.

TACH RC - is used to set the tach out pulse width. This is done by connecting a resistor from this pin to the REF OUT pin and a capacitor from the pin to the signal ground. Selection of these components is based on the desired maximum motor speed. (See TACH RC component selection)

TACH OUT - is connected to the -E/A pin through a resistor when using the speed controller in a closed loop configuration..

-E/A - is the error amp inverting input connection. It is brought out to allow various loop compensation circuits to be connected between this and E/A out.

E/A OUT - this is the loop error amp output connection. It is brought out for allowing various loop compensation circuits to be connected between this and -E/A.

REF OUT - is a 6.25 volt regulated output that can be used to power the hall devices in various motors. Up to 15 milliamps of current is available. In applications where pull-up resistors are being used to pull up to REF OUT, and the device being pulled up is a dual supply(±15V, for instance) device such as an open-collector comparator, a schottky diode shall be used between REF OUT and SIG GND to prevent a negative voltage condition on REF OUT during power-up. Without it, the device may latch up.

CURRENT LIMIT ADJUST - is used to adjust the output current limit. The pin, if left open will limit the output current to about 1 amp. The pin, taken to ground will limit the current to about 15 amps. A resistor from the pin to ground will yield current limits in between. (See Current Limit Adjust)

SPEED COMMAND (+,-) - are differential inputs for controlling the motor speed. With a positive voltage command the motor will operate in the forward direction and with a negative command the motor will operate in the reverse direction. The maximum operational command voltage should be ±5 volts.

COMMUTATION TRUTH TABLE

HALL SENSOR PHASING 120°			SPEED COMMAND = POS.			SPEED COMMAND = NEG.		
HALL A	HALL B	HALL C	AØ	BØ	CØ	AØ	BØ	CØ
1	0	0	H	-	L	L	-	H
1	1	0	-	H	L	-	L	H
0	1	0	L	H	-	H	L	-
0	1	1	L	-	H	H	-	L
0	0	1	-	L	H	-	H	L
1	0	1	H	L	-	L	H	-
1	1	1	-	-	-	-	-	-
0	0	0	-	-	-	-	-	-
X	X	X	L	L	L	L	L	L

1 = High Level
0 = Low Level
X = Don't Care

H = SOURCE
L = SINK
- = OPEN

BUS VOLTAGE FILTER CAPACITORS

The size and placement of the capacitors for the DC bus has a direct bearing on the amount of noise filtered and also on the size and duration of the voltage spikes seen by the bridge. What is being created is a series RLC tuned circuit with a resonant frequency that is seen as a damped ringing every time one of the transistors switches. For the resistance, wire resistance, power supply impedance and capacitor ESR all add up for the equivalent lumped resistance in the circuit. The inductance can be figured at about 30 nH per inch from the power supply. Any voltage spikes are on top of the bus voltage and the back EMF from the motor. All this must be taken into account when designing and laying out the system. If everything has been minimized, there is another solution. A second capacitance between 5 and 10 times the first capacitor and it should either have some ESR or a resistor can be added in series with the second capacitor to help damp the voltage spikes.

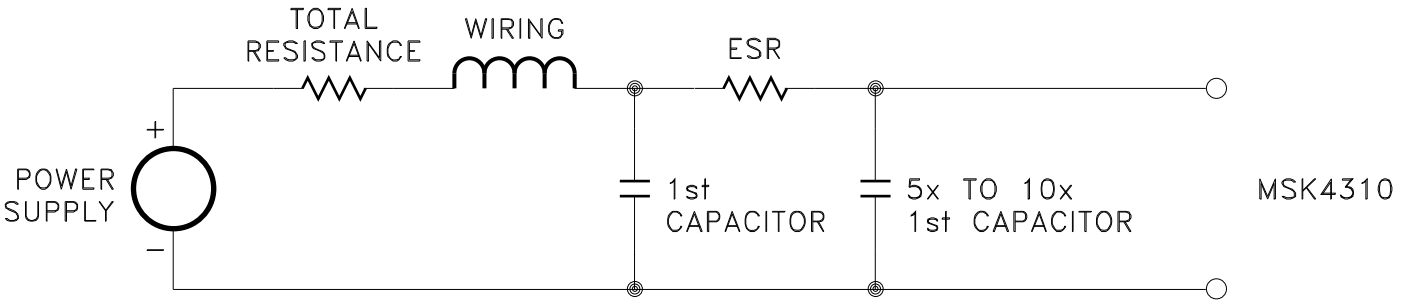

Be careful of the ripple current in all the capacitors. Excessive ripple current, beyond what the capacitors can handle, will destroy the capacitors.

INPUT VOLTAGE FILTER CAPACITORS

It is recommended that about 10 μF of capacitance (tantalum electrolytic) for bypassing the + and -15V power supplies be placed as close to the module pins as practical. Adding ceramic bypass capacitors of about 0.1 μF to 1 μF will aid in suppressing noise transients.

GENERAL LAYOUT

Good PC layout techniques are a must. Ground plane for the analog circuitry must be used and should be tied back to the SIG GND. Ground plane for the power circuitry should be tied back to the GND pin, pin 16. Pin 16 should be connected to pin 11 external to the hybrid by a single thick trace. This will connect the two ground planes together.

LOW POWER STARTUP

When starting up a system utilizing the MSK4310 for the first time, there are a few things to keep in mind. First, because of the small size of the module, short circuiting the output phases either to ground or the DC bus will destroy the bridge. The current limiting and control only works for current actually flowing through the bridge. The current sense resistor has to see the current in order for the electronics to control it. If possible, for startup use a lower voltage and lower current power supply to test out connections and the low current stability. With a limited current supply, even if the controller locks up, the dissipation will be limited. The ±15 volt power should be applied prior to applying the V+ voltage.

TACH RC COMPONENT SELECTION

For a given maximum motor speed, the tach output has a maximum pulse width. For example, if a maximum motor speed of 3000 RPM were desired and the permanet magnet on the rotor of the motor being used has two pairs of poles, each mechanical revolution would cause each hall effect sensor to deliver two pulses. The three sensors would generate six pulses. The MSK4310 tachometer would generate 12 pulses, one for each rising and falling edge of the sensor pulses. If a maximum motor speed in the example were desired, this would be 50 revolutions per second. The tachometer will be producing 600 pulses per second or have a frequency of 600Hz. Therefore, the maximum puse width would have to be less than 1.66 milliseconds. Figure one can be used to select component values to achieve the desired pulse width.

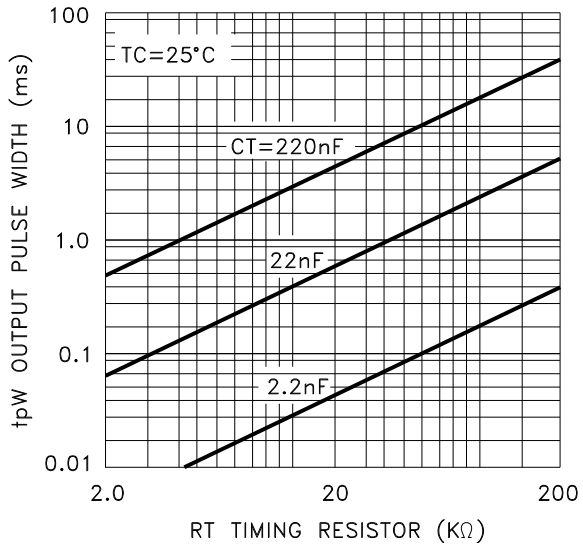

FIGURE 1

CURRENT LIMIT ADJUST

With the current limit adjust pin (pin 12) left open, the current will be limited to 1 amp ±0.6 amps. If a current limit of more than 1 amp but less than 15 amps is desired, a resistor between the pin and ground can be used to set a different limit. Figure two can assist in the selection of the resistor value for this purpose

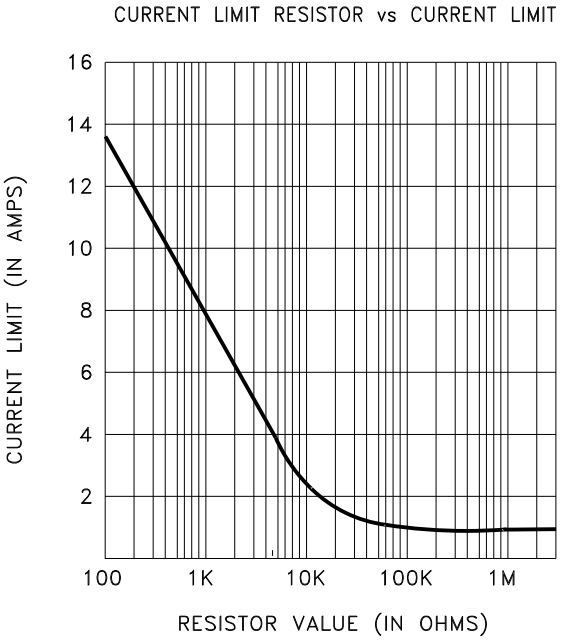

FIGURE 2

MSK4310 TYPICAL APPLICATION CIRCUIT

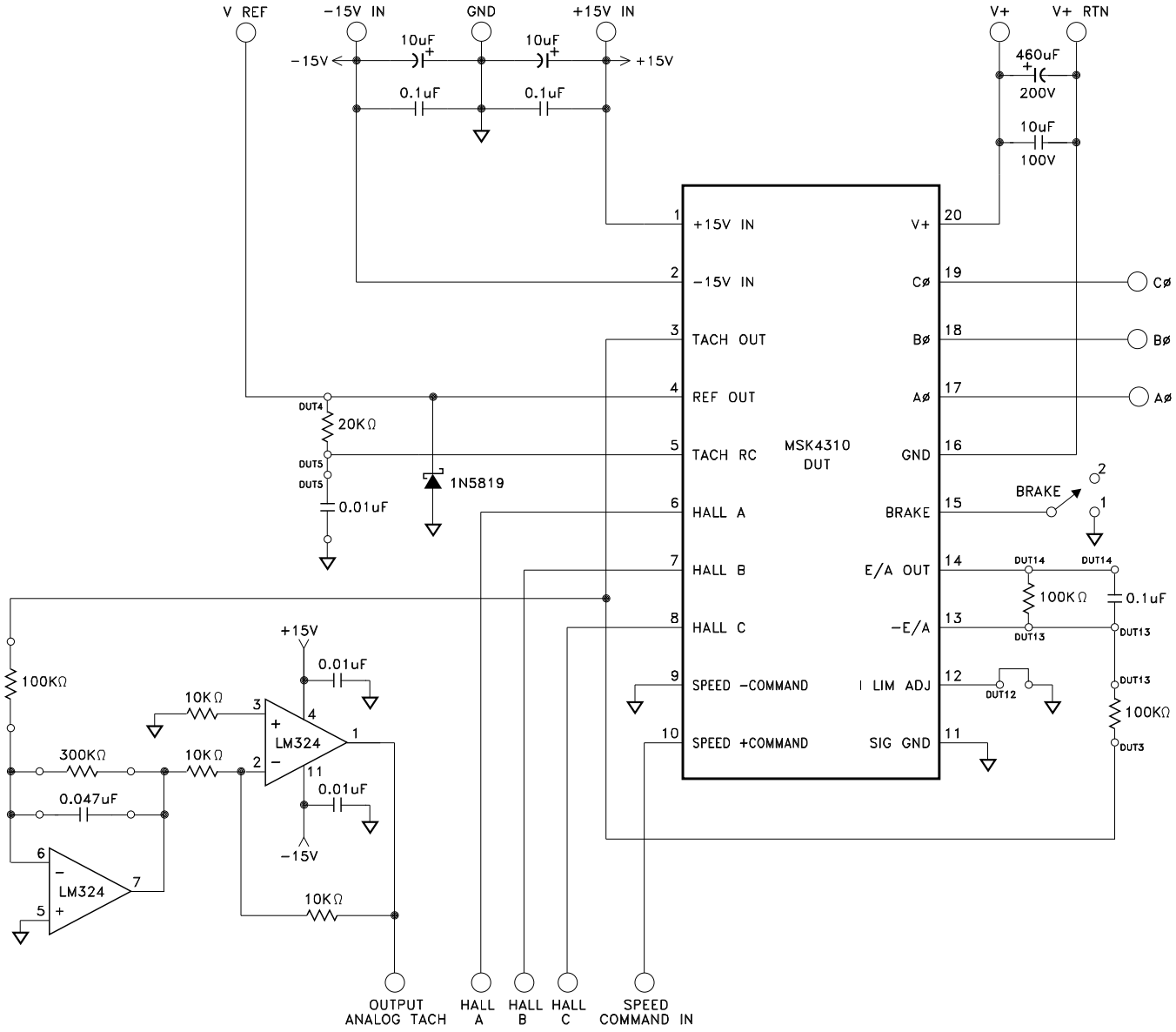

MECHANICAL SPECIFICATIONS

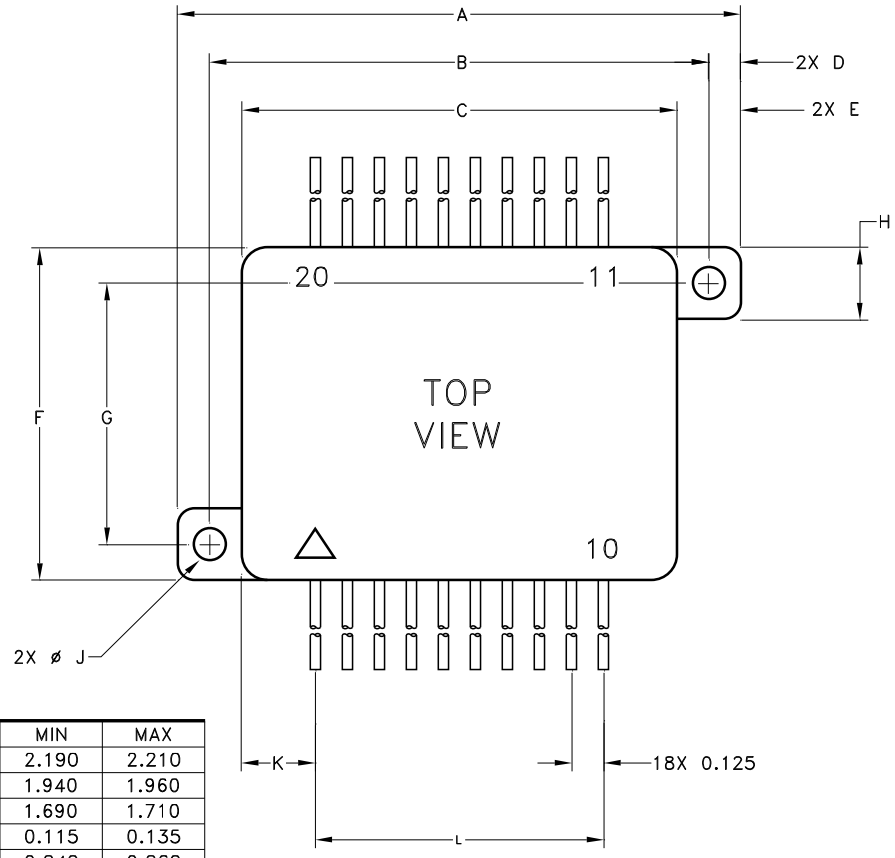

REF	MIN	MAX
A	2.190	2.210
B	1.940	1.960
C	1.690	1.710
D	0.115	0.135
E	0.240	0.260
F	1.290	1.310
G	1.040	1.060
H	0.270	0.290
J	0.120	0.130
K	0.278	0.298
L	1.115	1.135
M	0.500	———
N	———	0.300
O	0.050	0.070
P	0.035	0.045
R	0.150	0.170
S	0.120	0.130
T	0.175	———

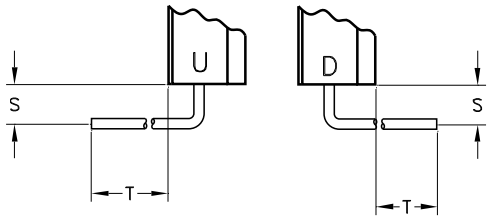

ESD TRIANGLE INDICATES PIN 1
WEIGHT = 41.4 GRAMS TYPICAL

ALL DIMENSIONS ARE SPECIFIED IN INCHES

ORDERING INFORMATION

MSK4310 H U

LEAD CONFIGURATIONS
S= STRAIGHT; U= BENT UP; D= BENT DOWN

SCREENING
BLANK= INDUSTRIAL; H=MIL-PRF-38534 CLASS H

GENERAL PART NUMBER

The above example is a Military grade hybrid with leads bent up.

REVISION HISTORY

REV	STATUS	DATE	DESCRIPTION
F	Released	12/14	Add internal note and clarify mechanical specifications.

MSK
Phone (315) 701-6751
FAX (315) 701-6752
www.mskennedy.com

The information contained herein is believed to be accurate at the time of printing. MSK reserves the right to make changes to its products or specifications without notice, however, and assumes no liability for the use of its products. Please visit our website for the most recent revision of this datasheet.
Contact MSK for MIL-PRF-38534 qualification status.