MSH Series 3.2 x 2.5 Ceramic SMD Oscillator

- **Low Profile Ceramic SMD Package**
- **Hermetically Sealed**
- **Tristate Function / Standby Option**
- **Wide Frequency Range**

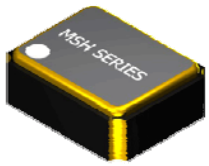

Frequency Range		1.544MHZ to 70.000MHZ	1.544MHZ to 110.000MHZ	
Temperature Stability*		(See Part Number Guide for Options)		
Aging (+25°C ±3°C)		±5ppm First Year		
Operating Temperature Range		(See Part Number Guide for Options)		
Storage Temperature Range		-55°C to +125°C		
Supply Voltage (±10%)		+1.80VDC	+2.50VDC	+3.30VDC
Supply Current	1.544MHZ to 9.999MHZ	10mA max	12mA max	14mA max
	10.000MHZ to 35.999MHZ	12mA max	14mA max	16mA max
	36.000MHZ to 49.999MHZ	15mA max	20mA max	25mA max
	50.000MHZ to 110.000MHZ	25mA max	30mA max	35mA max
Standby Current (With Stand-by Option)		100µA		
Tristate		VOH = 70% of Vdd min or No Connection to Enable Output VOL = 30% of Vdd max or grounded to Disable Output (High Impendence)		
Logic "0"		10% Vdd max		
Logic "1"		90% Vdd min		
Output Type		HCMOS		
Symmetry (50% of waveform)		(See Part Number Guide for Options)		
Rise/Fall Time (10% to 90% of Supply Voltage)		5nSEC	6nSEC	7nSEC
Load		15pF		
Start-up Time		2mSec max		
* Inclusive of Temperature., Load and Voltage.				

Mechanical & Environmental Detail

Humidity	85% RH, 85°C, 48 Hours
Hermetic Seal	Leak Rate 5 X 10^{-8} ATM cc/s He
Solderability	MIL-STD-202G, Method 208
Reflow Solderability	260°C for 10 seconds
Vibration	MIL-STD-202G, Method 204 35G, 50 to 2000 Hz
Shock	MIL-STD-202G, Method 203 Test Cond E, 1000G's, ½ Sinewave
MIL-STD-883	Available with Level B Screening

Marking Detail

First Line = MXX.XX (not to exceed 5 characters)		
M	=	MMD
XX.XX	=	Device Frequency (four digits including decimal point)
Second Line = SYWWL (not to exceed 5 characters)		
S	=	Internal Code
YWW	=	Date Code (Year/Week)
L	=	RoHS Compliant

QUALITY SYSTEM CERTIFIED = ISO 9001 =

MMD MONITOR/QUARTZEK – An ILSI Company,
5458 Louie Lane, Reno, NV 89511
Phone: (775) 851-8880, www.mmdcomp.com

RoHS Compliant Lead Free

Revision:	05/24/16_L

Part Number Guide

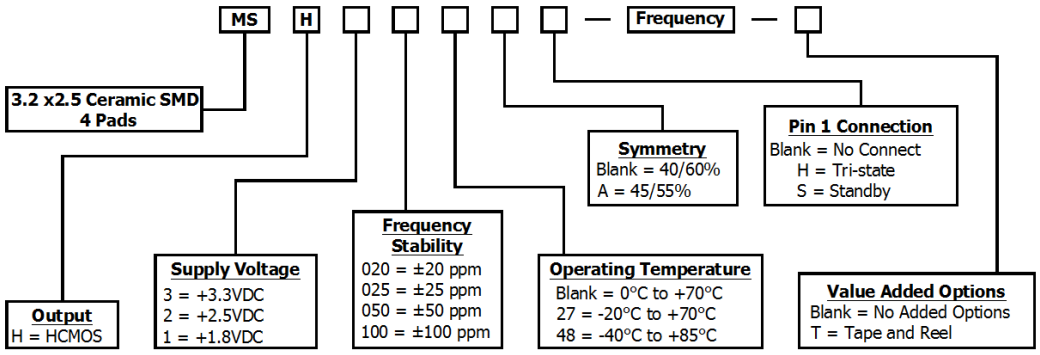

Please Consult with MMD Sales Department for any other Parameters or Options

Mechanical Details

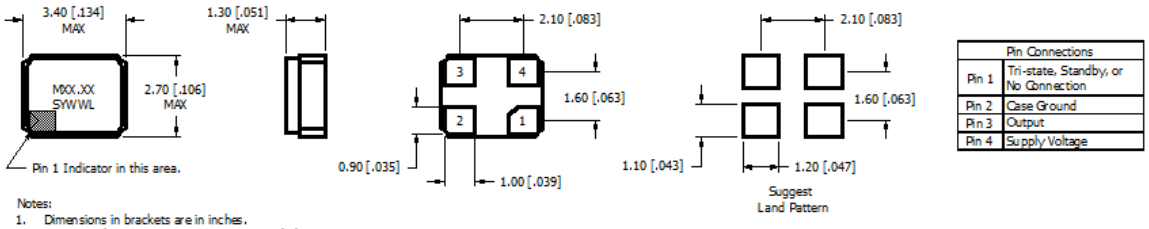

Pin Connections	
Pin 1	Tri-state, Standby, or No Connection
Pin 2	Case Ground
Pin 3	Output
Pin 4	Supply Voltage

Notes:
1. Dimensions in brackets are in inches.
2. An External Bypass Capacitor is recommended.
3. Pads Plating
   Base or under conductor Ni thickness: 1.3 um to 8.8 um
   Final plating: Au (99.9%) less than 0.5 um, 0.3 um typ

Tape & Reel Dimensions

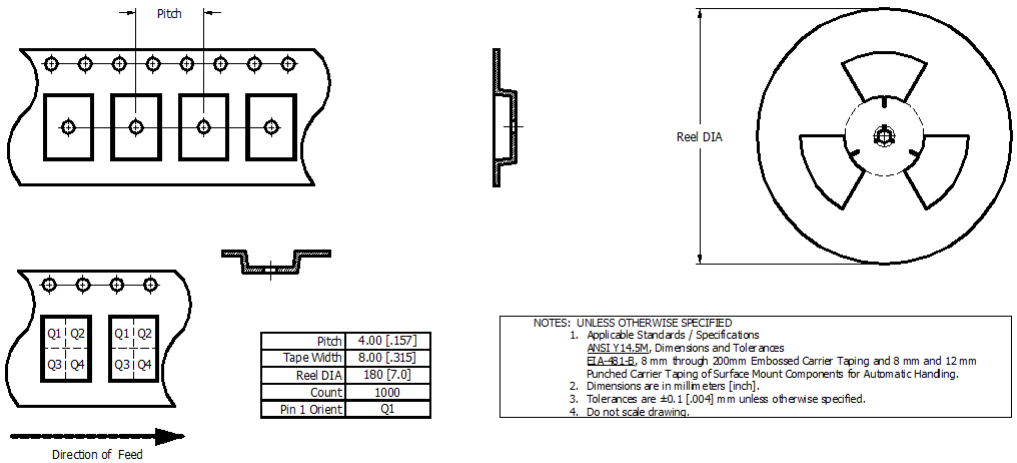

Pitch	4.00 [.157]
Tape Width	8.00 [.315]
Reel DIA	180 [7.0]
Count	1000
Pin 1 Orient	Q1

NOTES: UNLESS OTHERWISE SPECIFIED
1. Applicable Standards / Specifications
   ANSI Y14.5M, Dimensions and Tolerances
   EIA-481-B, 8 mm through 200mm Embossed Carrier Taping and 8 mm and 12 mm Punched Carrier Taping of Surface Mount Components for Automatic Handling.
2. Dimensions are in millimeters [inch].
3. Tolerances are ±0.1 [.004] mm unless otherwise specified.
4. Do not scale drawing.

QUALITY SYSTEM CERTIFIED = ISO 9001 =

MMD MONITOR/QUARTZEK – An ILSI Company,
5458 Louie Lane, Reno, NV 89511
Phone: (775) 851-8880, www.mmdcomp.com

RoHS Compliant Lead Free

Revision:	05/24/16_L