MSD602-RT1G

NPN General Purpose Amplifier Transistor Surface Mount

Features

- S Prefix for Automotive and Other Applications Requiring Unique Site and Control Change Requirements; AEC−Q101 Qualified and PPAP Capable
- These Devices are Pb−Free, Halogen Free/BFR Free and are RoHS Compliant*

MAXIMUM RATINGS (T_A = 25°C)

Rating	Symbol	Value	Unit
Collector−Base Voltage	$V_{(BR)CBO}$	60	Vdc
Collector−Emitter Voltage	$V_{(BR)CEO}$	50	Vdc
Emitter−Base Voltage	$V_{(BR)EBO}$	7.0	Vdc
Collector Current − Continuous	I_C	500	mAdc
Collector Current − Peak	$I_{C(P)}$	1.0	Adc

THERMAL CHARACTERISTICS

Characteristic	Symbol	Max	Unit
Power Dissipation	P_D	200	mW
Junction Temperature	T_J	150	°C
Storage Temperature	T_{stg}	−55 ~ +150	°C

Stresses exceeding those listed in the Maximum Ratings table may damage the device. If any of these limits are exceeded, device functionality should not be assumed, damage may occur and reliability may be affected.

*For additional information on our Pb−Free strategy and soldering details, please download the ON Semiconductor Soldering and Mounting Techniques Reference Manual, SOLDERRM/D.

ON Semiconductor®

http://onsemi.com



SC−59
CASE 318D
STYLE 1

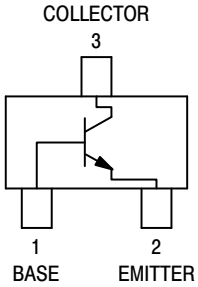

MARKING DIAGRAM

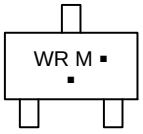

WR = Specific Device Code
M = Date Code
▪ = Pb−Free Package
(Note: Microdot may be in either location)

ORDERING INFORMATION

Device	Package	Shipping†
MSD−602RT1G	SC−59 (Pb−Free)	3,000 / Tape & Reel
SMSD−602RT1G	SC−59 (Pb−Free)	3,000 / Tape & Reel

†For information on tape and reel specifications, including part orientation and tape sizes, please refer to our Tape and Reel Packaging Specifications Brochure, BRD8011/D.

© Semiconductor Components Industries, LLC, 2014

ELECTRICAL CHARACTERISTICS (T_A = 25°C)

Characteristic	Symbol	Min	Max	Unit
Collector−Emitter Breakdown Voltage (I_C = 10 mA, I_B = 0)	$V_{(BR)CEO}$	50	−	V
Collector−Base Breakdown Voltage (I_C = 10 μA, I_E = 0)	$V_{(BR)CBO}$	60	−	V
Emitter−Base Breakdown Voltage (I_E = 10 μA, I_C = 0)	$V_{(BR)EBO}$	7.0	−	V
Collector−Base Cutoff Current (V_{CB} = 20 V, I_E = 0)	I_{CBO}	−	0.1	μA
DC Current Gain (Note 1) (V_{CE} = 10 V, I_C = 150 mA) (V_{CE} = 10 V, I_C = 500 mA)	h_{FE1} h_{FE2}	120 40	240 −	−
Collector−Emitter Saturation Voltage (I_C = 300 mA, I_B = 30 mA)	$V_{CE(sat)}$	−	0.6	V
Base−Emitter On Voltage (I_C = 300 mA, V_{CE} = 5 V)	$V_{BE(on)}$	−	1.0	V
Base−Emitter Saturation Voltage (I_C = 300 mA, I_B = 30 mA)	$V_{BE(sat)}$	−	1.0	V
Output Capacitance (V_{CB} = 10 V, I_E = 0, f = 1.0 MHz)	C_{ob}	−	15	pF

Product parametric performance is indicated in the Electrical Characteristics for the listed test conditions, unless otherwise noted. Product performance may not be indicated by the Electrical Characteristics if operated under different conditions.

1. Pulse Test: Pulse Width ≤ 300 μs, D.C. ≤ 2%.

TYPICAL CHARACTERISTICS

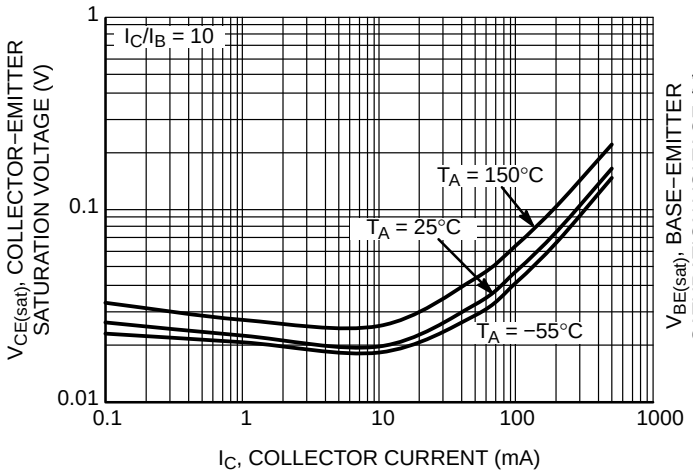

Figure 1. Collector−Emitter Saturation Voltage vs. Collector Current

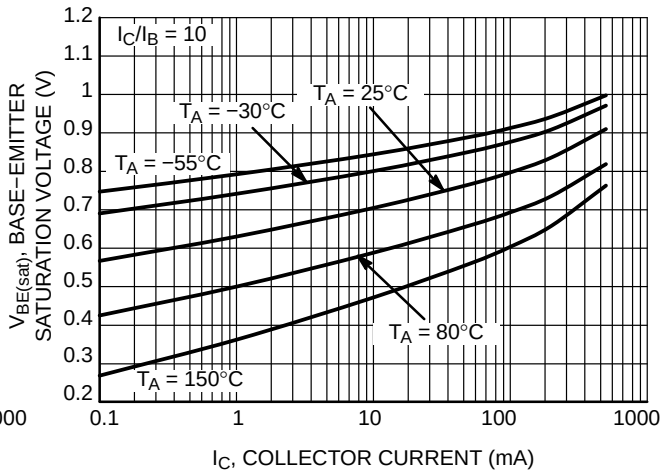

Figure 2. Base−Emitter Saturation Voltage vs. Collector Current

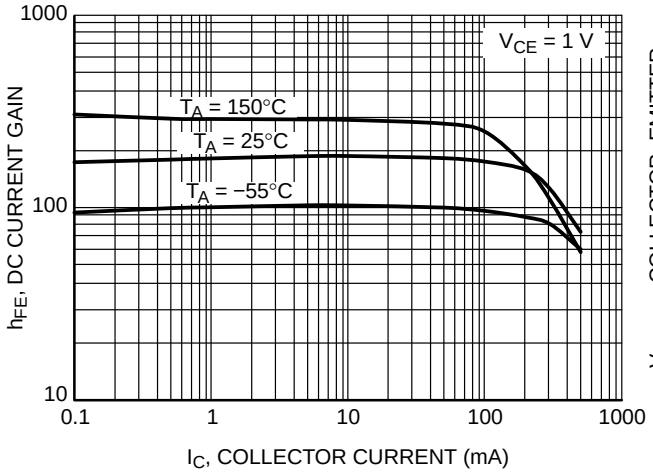

Figure 3. DC Current Gain vs. Collector Current

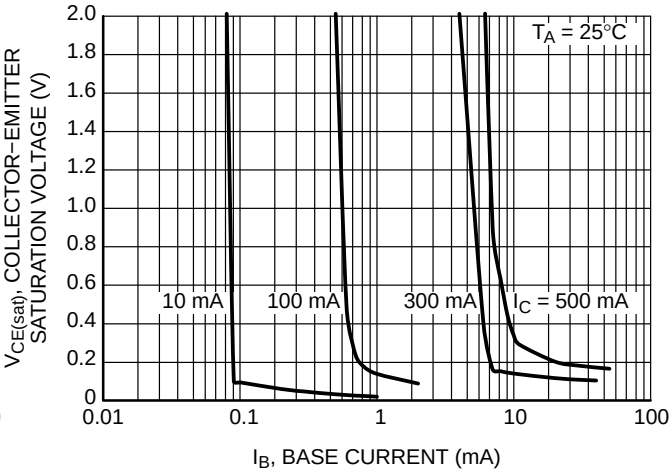

Figure 4. Saturation Region

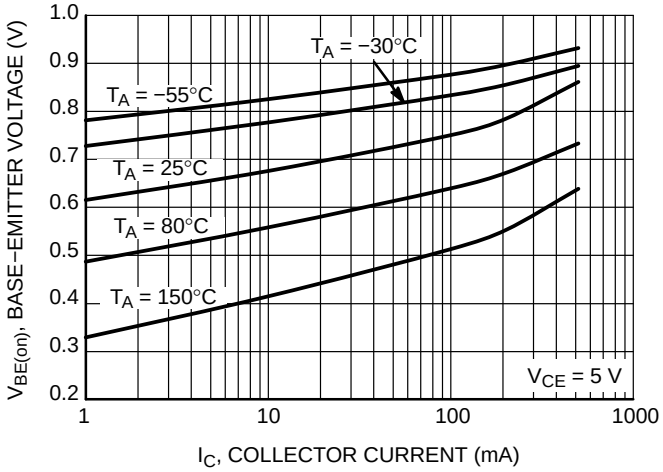

Figure 5. Base−Emitter Turn−On Voltage vs. Collector Current

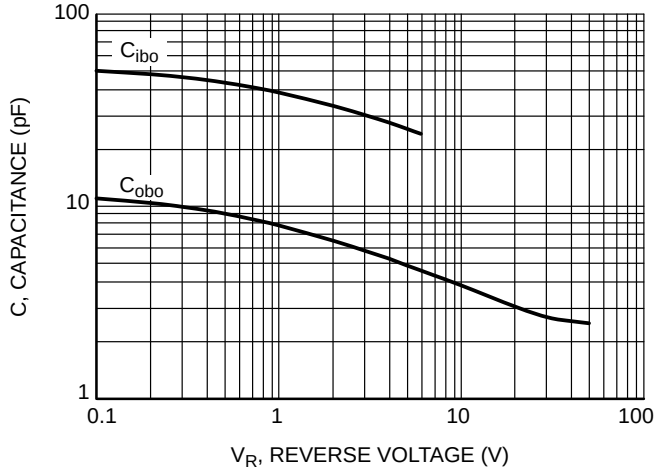

Figure 6. Capacitance

TYPICAL CHARACTERISTICS

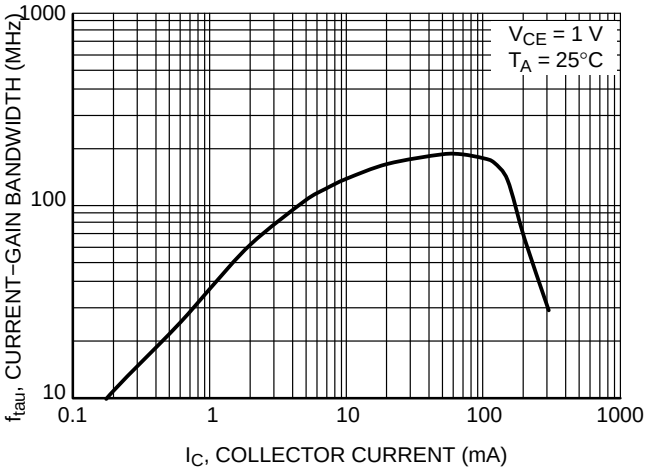

Figure 7. Current Gain Bandwidth Product vs. Collector Current

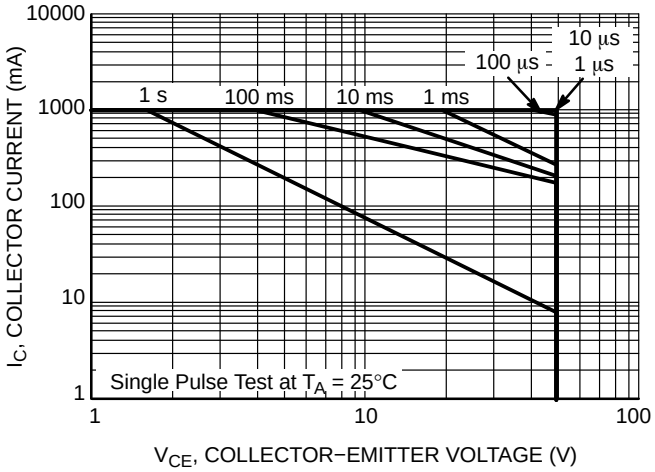

Figure 8. Safe Operating Area

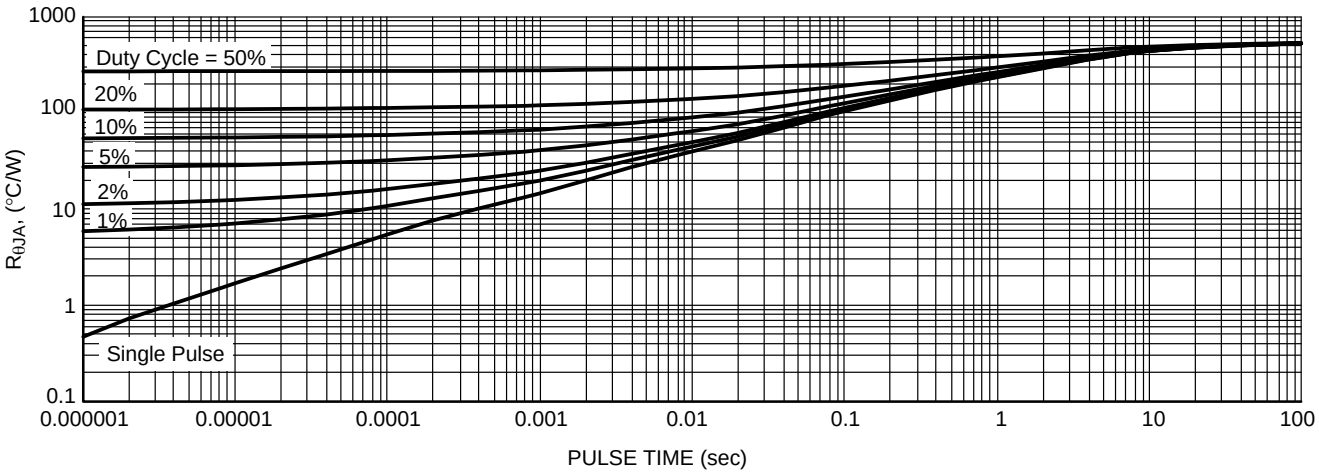

Figure 9. Thermal Response

MSD602−RT1G

PACKAGE DIMENSIONS

SC−59
CASE 318D−04
ISSUE H

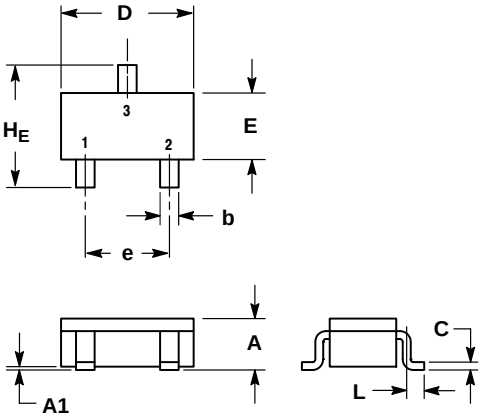

NOTES:
1. DIMENSIONING AND TOLERANCING PER ANSI Y14.5M, 1982.
2. CONTROLLING DIMENSION: MILLIMETER.

	MILLIMETERS			INCHES		
DIM	**MIN**	**NOM**	**MAX**	**MIN**	**NOM**	**MAX**
A	1.00	1.15	1.30	0.039	0.045	0.051
A1	0.01	0.06	0.10	0.001	0.002	0.004
b	0.35	0.43	0.50	0.014	0.017	0.020
c	0.09	0.14	0.18	0.003	0.005	0.007
D	2.70	2.90	3.10	0.106	0.114	0.122
E	1.30	1.50	1.70	0.051	0.059	0.067
e	1.70	1.90	2.10	0.067	0.075	0.083
L	0.20	0.40	0.60	0.008	0.016	0.024
H_E	2.50	2.80	3.00	0.099	0.110	0.118

STYLE 1:
PIN 1. BASE
2. EMITTER
3. COLLECTOR

SOLDERING FOOTPRINT*

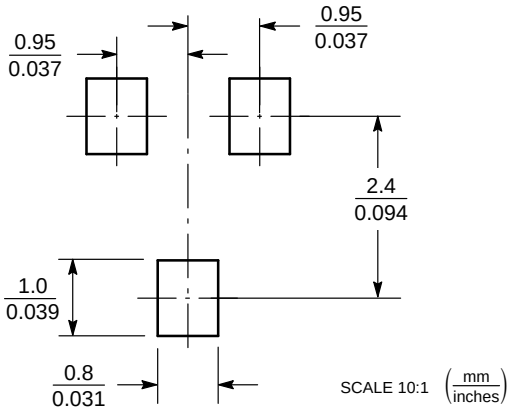

*For additional information on our Pb−Free strategy and soldering details, please download the ON Semiconductor Soldering and Mounting Techniques Reference Manual, SOLDERRM/D.

ON Semiconductor and ON are registered trademarks of Semiconductor Components Industries, LLC (SCILLC). SCILLC owns the rights to a number of patents, trademarks, copyrights, trade secrets, and other intellectual property. A listing of SCILLC's product/patent coverage may be accessed at www.onsemi.com/site/pdf/Patent−Marking.pdf. SCILLC reserves the right to make changes without further notice to any products herein. SCILLC makes no warranty, representation or guarantee regarding the suitability of its products for any particular purpose, nor does SCILLC assume any liability arising out of the application or use of any product or circuit, and specifically disclaims any and all liability, including without limitation special, consequential or incidental damages. "Typical" parameters which may be provided in SCILLC data sheets and/or specifications can and do vary in different applications and actual performance may vary over time. All operating parameters, including "Typicals" must be validated for each customer application by customer's technical experts. SCILLC does not convey any license under its patent rights nor the rights of others. SCILLC products are not designed, intended, or authorized for use as components in systems intended for surgical implant into the body, or other applications intended to support or sustain life, or for any other application in which the failure of the SCILLC product could create a situation where personal injury or death may occur. Should Buyer purchase or use SCILLC products for any such unintended or unauthorized application, Buyer shall indemnify and hold SCILLC and its officers, employees, subsidiaries, affiliates, and distributors harmless against all claims, costs, damages, and expenses, and reasonable attorney fees arising out of, directly or indirectly, any claim of personal injury or death associated with such unintended or unauthorized use, even if such claim alleges that SCILLC was negligent regarding the design or manufacture of the part. SCILLC is an Equal Opportunity/Affirmative Action Employer. This literature is subject to all applicable copyright laws and is not for resale in any manner.

PUBLICATION ORDERING INFORMATION

LITERATURE FULFILLMENT:
Literature Distribution Center for ON Semiconductor
P.O. Box 5163, Denver, Colorado 80217 USA
Phone: 303−675−2175 or 800−344−3860 Toll Free USA/Canada
Fax: 303−675−2176 or 800−344−3867 Toll Free USA/Canada
Email: orderlit@onsemi.com

N. American Technical Support: 800−282−9855 Toll Free USA/Canada
Europe, Middle East and Africa Technical Support:
Phone: 421 33 790 2910
Japan Customer Focus Center
Phone: 81−3−5817−1050

ON Semiconductor Website: **www.onsemi.com**

Order Literature: http://www.onsemi.com/orderlit

For additional information, please contact your local Sales Representative

MSD602−RT1/D