MS6038-S series



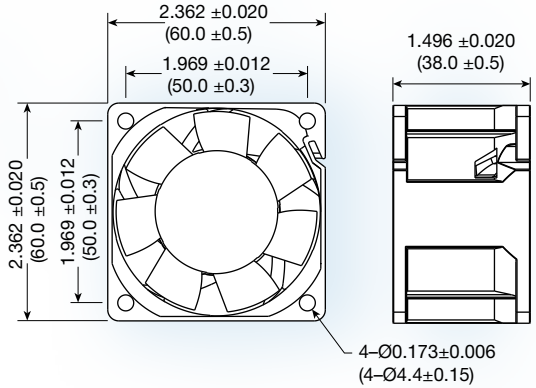

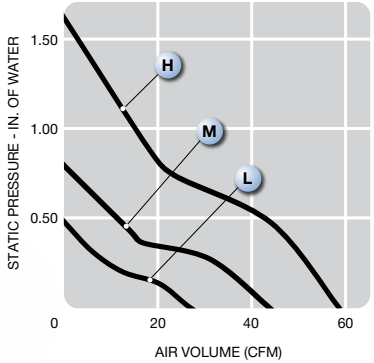

(60 x 60 x 38 mm)

2.36 x 2.36 x 1.50 inches

Features:	soft start, polarity protection, auto-restart
Operating Voltage:	12, 24 and 48 VDC
Construction:	UL94V-0 plastic impeller and plastic frame
Bearing option:	ball bearing
Air Flow:	air exhaust over struts
Options:	• tachometer; • locked rotor alarm signal; • PWM speed control; • conformal coating; • encapsulated motor (IP68)



Model No.	Rated Voltage	Current A			Speed	Air Volume		Max. Static Pressure (H_2O)		Sound Noise	Weight
	VDC	12	24	48	RPM	M^3/Min.	CFM	MM	INCH	dbA	g
MS6038L-S	12/24/48	0.27	0.13	0.09	6,000	0.74	32	11.89	0.47	39	104
MS6038M-S	12/24/48	0.58	0.32	0.14	8,000	1.24	44.1	20.73	0.81	54	104
MS6038H-S	12/24/48	1.30	0.58	0.29	11,000	1.64	58.0	40.60	1.60	59	104

*Additional performance levels available, contact Mechatronics for more options