MS3480 - Connector Wrench
MIL-DTL-5015 and MIL-DTL-83723 Series II

MS3480-28

Basic Part No. — Dash No.

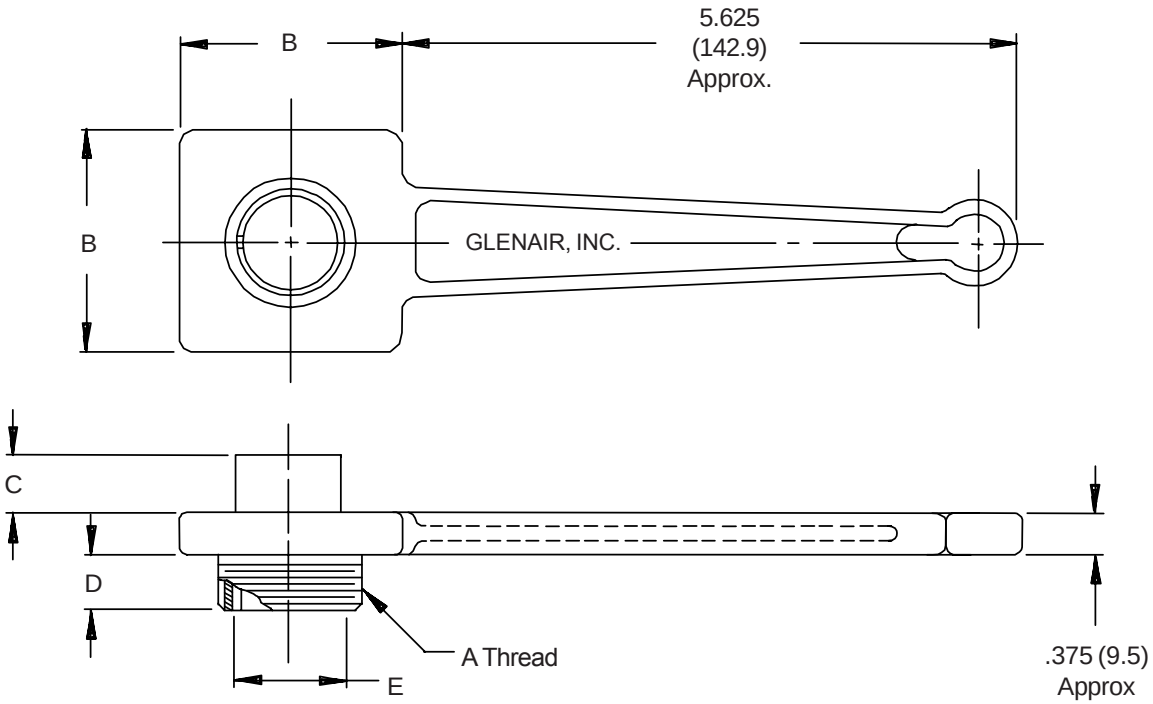

TABLE I

Dash No.	Shell Size	A Thread Class 2A	B Dia. ± .060	(1.5)	C Approx.		D Approx.		E +0 -.015	(.4)
8	8S	1/2 -28 UNEF	1.250	(31.8)	.718	(18.2)	.687	(17.4)	.370	(9.4)
10	10S, 10SL	5/8 -24 UNEF	1.250	(31.8)	.718	(18.2)	.687	(17.4)	.448	(11.4)
12	12, 12S	3/4 -20 UNEF	1.250	(31.8)	.921	(23.4)	.750	(19.1)	.557	(14.1)
14	14, 14S	7/8 -20 UNEF	1.250	(31.8)	.921	(23.4)	.750	(19.1)	.682	(17.3)
16	16, 16S	1 -20 UNEF	2.000	(50.8)	.921	(23.4)	.750	(19.1)	.807	(20.5)
18	18	1 1/8 -18 UNEF	2.000	(50.8)	.921	(23.4)	.750	(19.1)	.932	(23.7)
20	20	1 1/4 -18 UNEF	2.000	(50.8)	.921	(23.4)	.750	(19.1)	1.058	(26.9)
22	22	1 3/8 -18 UNEF	2.000	(50.8)	.921	(23.4)	.750	(19.1)	1.182	(30.0)
24	24	1 1/2 -18 UNEF	2.000	(50.8)	.921	(23.4)	.750	(19.1)	1.307	(33.2)
28	28	1 3/4 -18 UNS	2.750	(69.9)	.921	(23.4)	.750	(19.1)	1.526	(38.8)
32	32	2 -18 UNS	2.750	(69.9)	.921	(23.4)	.750	(19.1)	1.776	(45.1)
36	36	2 1/4 -16 UN	2.750	(69.9)	.921	(23.4)	.750	(19.1)	1.995	(50.7)
40	40	2 1/2 -16 UN	2.750	(69.9)	.921	(23.4)	.750	(19.1)	2.245	(57.0)

1. For complete dimensions see applicable Military Specification.
2. Metric dimensions (mm) are indicated in parentheses.
3. Material: Aluminum alloy with electroless nickel finish.

© 2005 Glenair, Inc.
CAGE Code 06324 Printed in U.S.A.