Freescale Semiconductor
Technical Data

Document Number: MRF6V12500H
Rev. 5, 7/2016

RF Power LDMOS Transistors

N-Channel Enhancement-Mode Lateral MOSFETs

These RF power transistors are designed for applications operating at frequencies between 960 and 1215 MHz such as distance measuring equipment (DME), transponders and secondary radars for air traffic control. These devices are suitable for use in pulse applications, including Mode S ELM.

- Typical Pulse Performance: V_{DD} = 50 Volts, I_{DQ} = 200 mA

Application	Signal Type	P_{out} (1) (W)	Freq. (MHz)	G_{ps} (dB)	η_D (%)
Narrowband Short Pulse	Pulse (128 μsec, 10% Duty Cycle)	500 Peak	1030	19.7	62.0
Narrowband Mode S ELM	Pulse (48 × (32 μsec on, 18 μsec off), Period 2.4 msec, 6.4% Long-term Duty Cycle)	500 Peak	1030	19.7	62.0
Broadband	Pulse (128 μsec, 10% Duty Cycle)	500 Peak	960-1215	18.5	57.0

1. Minimum output power for each specified pulse condition.

- Capable of Handling 10:1 VSWR @ 50 Vdc, 1030 MHz, 500 Watts Peak Power

Features

- Characterized with Series Equivalent Large-Signal Impedance Parameters
- Internally Matched for Ease of Use
- Qualified up to a Maximum of 50 V_{DD} Operation
- Integrated ESD Protection
- Greater Negative Gate-Source Voltage Range for Improved Class C Operation

MRF6V12500H
MRF6V12500HS
MRF6V12500GS

960-1215 MHz, 500 W, 50 V
PULSE
RF POWER LDMOS TRANSISTORS

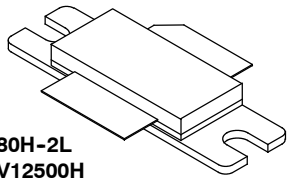

NI-780H-2L
MRF6V12500H

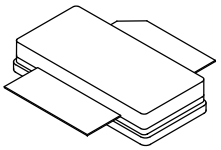

NI-780S-2L
MRF6V12500HS

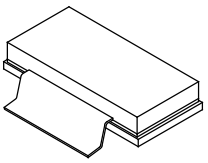

NI-780GS-2L
MRF6V12500GS

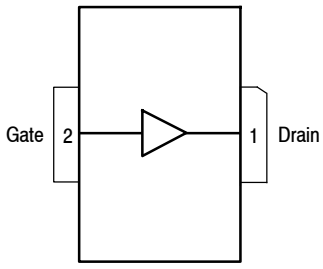

(Top View)

Note: The backside of the package is the source terminal for the transistor.

Figure 1. Pin Connections

© Freescale Semiconductor, Inc., 2009-2010, 2012, 2015-2016. All rights reserved.

Table 1. Maximum Ratings

Rating	Symbol	Value	Unit
Drain-Source Voltage	V_{DSS}	-0.5, +110	Vdc
Gate-Source Voltage	V_{GS}	-6.0, +10	Vdc
Storage Temperature Range	T_{stg}	-65 to +150	°C
Case Operating Temperature	T_C	150	°C
Operating Junction Temperature (1,2)	T_J	225	°C

Table 2. Thermal Characteristics

Characteristic	Symbol	Value (2,3)	Unit
Thermal Impedance, Junction to Case Case Temperature 80°C, 500 W Peak, 128 μsec Pulse Width, 10% Duty Cycle	$Z_{\theta JC}$	0.044	°C/W

Table 3. ESD Protection Characteristics

Test Methodology	Class
Human Body Model (per JESD22-A114)	2, passes 2600 V
Machine Model (per EIA/JESD22-A115)	B, passes 200 V
Charge Device Model (per JESD22-C101)	IV, passes 2000 V

Table 4. Electrical Characteristics (T_A = 25°C unless otherwise noted)

Characteristic	Symbol	Min	Typ	Max	Unit
Off Characteristics					
Gate-Source Leakage Current (V_{GS} = 5 Vdc, V_{DS} = 0 Vdc)	I_{GSS}	—	—	10	μAdc
Drain-Source Breakdown Voltage (V_{GS} = 0 Vdc, I_D = 200 mA)	$V_{(BR)DSS}$	110	—	—	Vdc
Zero Gate Voltage Drain Leakage Current (V_{DS} = 50 Vdc, V_{GS} = 0 Vdc)	I_{DSS}	—	—	20	μAdc
Zero Gate Voltage Drain Leakage Current (V_{DS} = 90 Vdc, V_{GS} = 0 Vdc)	I_{DSS}	—	—	200	μAdc
On Characteristics					
Gate Threshold Voltage (V_{DS} = 10 Vdc, I_D = 1.32 mA)	$V_{GS(th)}$	0.9	1.7	2.4	Vdc
Gate Quiescent Voltage (V_{DD} = 50 Vdc, I_D = 200 mAdc, Measured in Functional Test)	$V_{GS(Q)}$	1.7	2.4	3.2	Vdc
Drain-Source On-Voltage (V_{GS} = 10 Vdc, I_D = 3.26 Adc)	$V_{DS(on)}$	—	0.25	—	Vdc
Dynamic Characteristics (4)					
Reverse Transfer Capacitance (V_{DS} = 50 Vdc ± 30 mV(rms)ac @ 1 MHz, V_{GS} = 0 Vdc)	C_{rss}	—	0.2	—	pF
Output Capacitance (V_{DS} = 50 Vdc ± 30 mV(rms)ac @ 1 MHz, V_{GS} = 0 Vdc)	C_{oss}	—	697	—	pF
Input Capacitance (V_{DS} = 50 Vdc, V_{GS} = 0 Vdc ± 30 mV(rms)ac @ 1 MHz)	C_{iss}	—	1391	—	pF

1. Continuous use at maximum temperature will affect MTTF.
2. MTTF calculator available at http://www.nxp.com/RF/calculators.
3. Refer to AN1955, *Thermal Measurement Methodology of RF Power Amplifiers.* Go to http://www.nxp.com/RF and search for AN1955.
4. Part internally matched both on input and output.

(continued)

Table 4. Electrical Characteristics (T_A = 25°C unless otherwise noted) **(continued)**

Characteristic	Symbol	Min	Typ	Max	Unit
Functional Tests (In Freescale Narrowband Test Fixture, 50 ohm system) V_{DD} = 50 Vdc, I_{DQ} = 200 mA, P_{out} = 500 W Peak (50 W Avg.), f = 1030 MHz, 128 μsec Pulse Width, 10% Duty Cycle					
Power Gain	G_{ps}	18.5	19.7	22.0	dB
Drain Efficiency	η_D	58.0	62.0	—	%
Input Return Loss	IRL	—	-18	-9	dB
Typical Broadband Performance — 960-1215 MHz (In Freescale 960-1215 MHz Test Fixture, 50 ohm system) V_{DD} = 50 Vdc, I_{DQ} = 200 mA, P_{out} = 500 W Peak (50 W Avg.), f = 960-1215 MHz, 128 μsec Pulse Width, 10% Duty Cycle					
Power Gain	G_{ps}	—	18.5	—	dB
Drain Efficiency	η_D	—	57.0	—	%

Table 5. Ordering Information

Device	Tape and Reel Information	Package
MRFE6V12500HR5	R5 Suffix = 50 Units, 56 mm Tape Width, 13-inch Reel	NI-780H-2L
MRFE6V12500HSR5		NI-780S-2L
MRFE6V12500GSR5		NI-780GS-2L

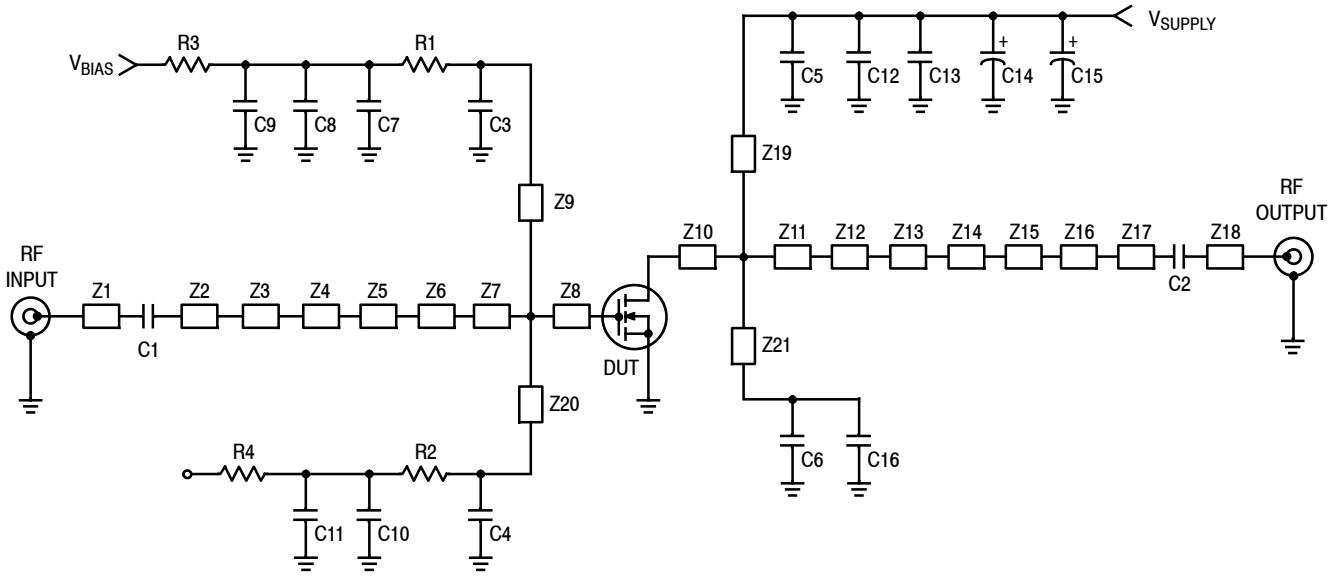

Z1	0.457″ x 0.080″ Microstrip	Z11	0.161” x 1.500″ Microstrip
Z2	0.250″ x 0.080″ Microstrip	Z12	0.613” x 1.281″ Microstrip
Z3	0.605″ x 0.040″ Microstrip	Z13	0.248” x 0.865″ Microstrip
Z4	0.080″ x 0.449″ Microstrip	Z14	0.087” x 0.425″ Microstrip
Z5	0.374″ x 0.608″ Microstrip	Z15	0.309” x 0.090″ Microstrip
Z6	0.118″ x 1.252″ Microstrip	Z16	0.193” x 0.516″ Microstrip
Z7	0.778″ x 1.710″ Microstrip	Z17	0.279” x 0.080″ Microstrip
Z8	0.095″ x 1.710″ Microstrip	Z18	0.731” x 0.080″ Microstrip
Z9, Z20	0.482″ x 0.050″ Microstrip	Z19, Z21	0.507” x 0.040″ Microstrip
Z10	0.138″ x 1.500″ Microstrip	PCB	Arlon CuClad 250GX-0300-55-22, 0.030″, ε_r = 2.55

Figure 2. MRF6V12500H(HS) Test Circuit Schematic

Table 6. MRF6V12500H(HS) Test Circuit Component Designations and Values

Part	Description	Part Number	Manufacturer
C1, C2	5.1 pF Chip Capacitors	ATC100B5R1CT500XT	ATC
C3, C4, C5, C6	33 pF Chip Capacitors	ATC100B330JT500XT	ATC
C7, C10	10 μF, 50 V Chip Capacitors	GRM55DR61H106KA88L	Murata
C8, C11, C13, C16	2.2 μF, 100 V Chip Capacitors	2225X7R225KT3AB	ATC
C9	22 μF, 25 V Chip Capacitor	TPSD226M025R0200	AVX
C12	1 μF, 100 V Chip Capacitor	GRM31CR72A105KA01L	Murata
C14, C15	470 μF, 63 V Electrolytic Capacitors	MCGPR63V477M13X26-RH	Multicomp
R1, R2	56 Ω, 1/4 W Chip Resistors	CRCW120656R0FKEA	Vishay
R3, R4	0 Ω, 3 A Chip Resistors	CRCW12060000Z0EA	Vishay

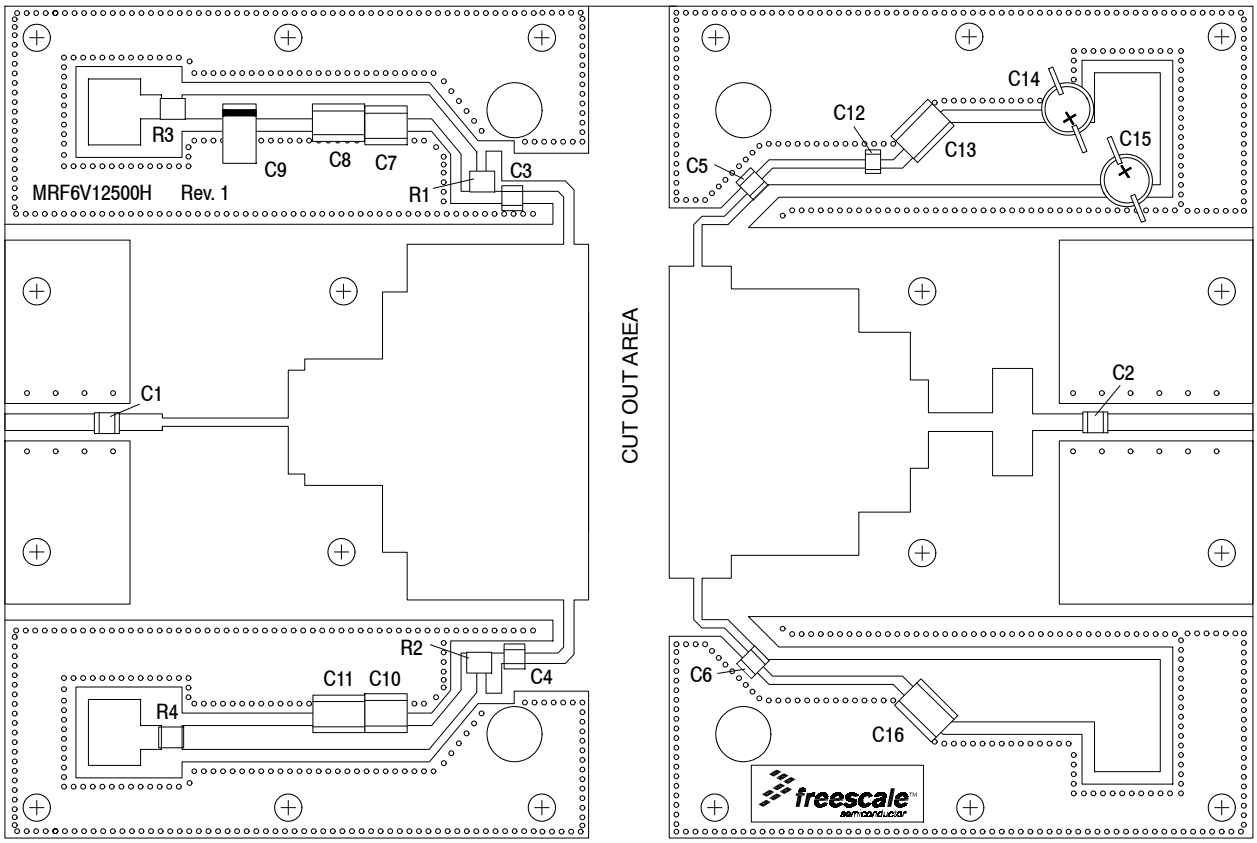

Figure 3. MRF6V12500H(HS) Test Circuit Component Layout

TYPICAL CHARACTERISTICS

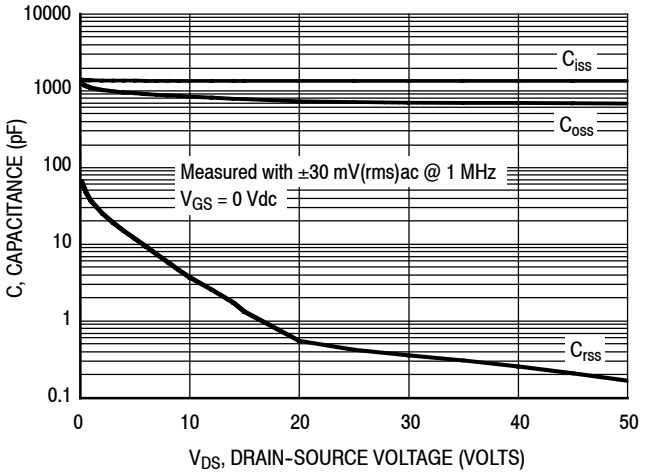

Figure 4. Capacitance versus Drain-Source Voltage

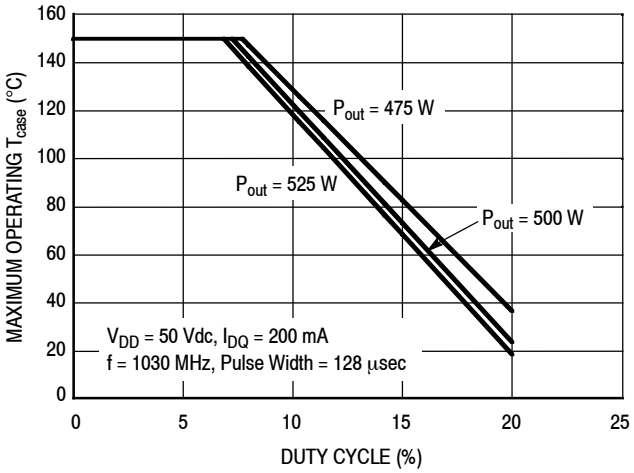

Figure 5. Safe Operating Area

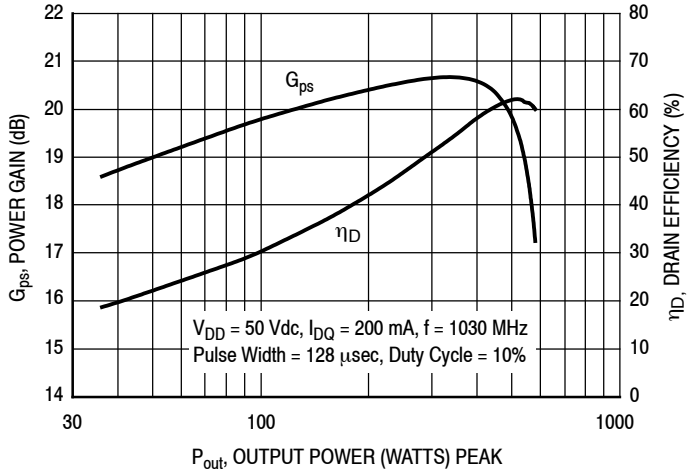

Figure 6. Power Gain and Drain Efficiency versus Output Power

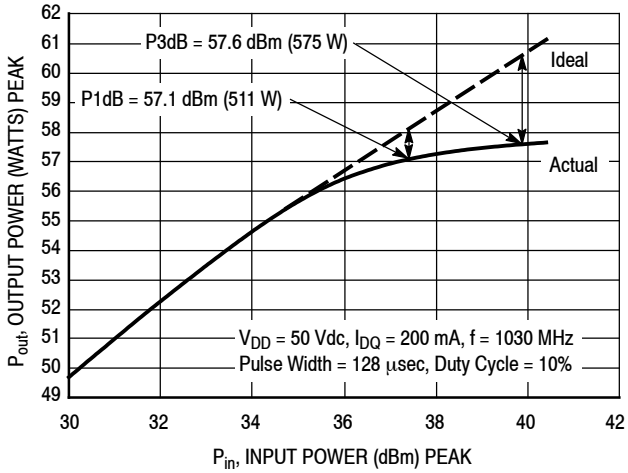

Figure 7. Output Power versus Input Power

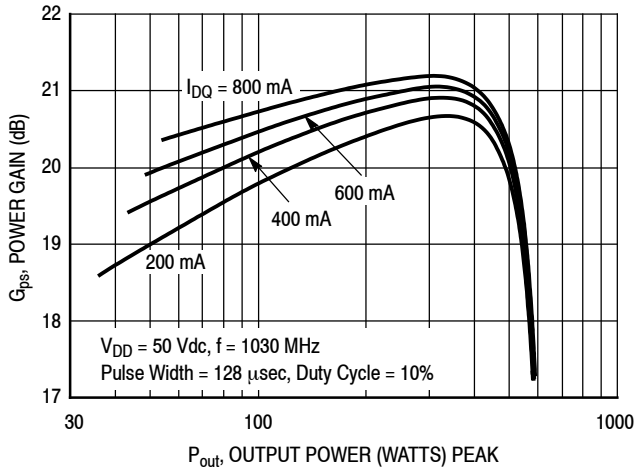

Figure 8. Power Gain versus Output Power

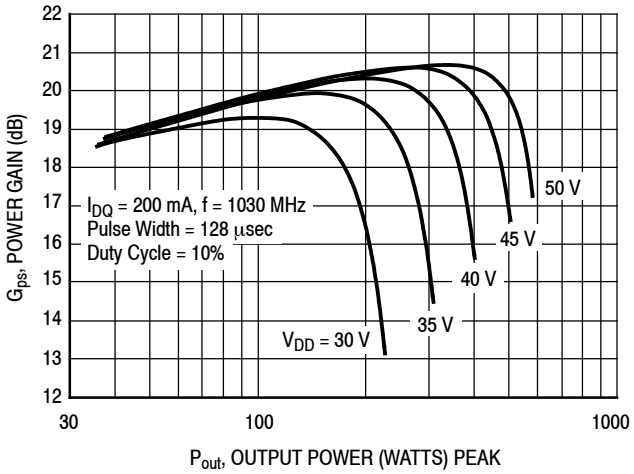

Figure 9. Power Gain versus Output Power

TYPICAL CHARACTERISTICS

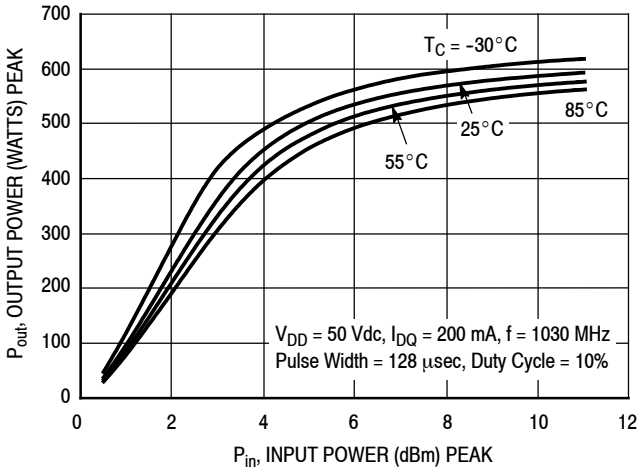

Figure 10. Output Power versus Input Power

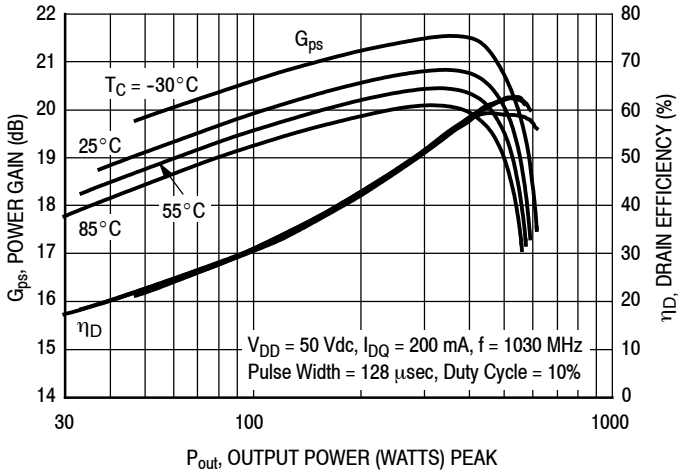

Figure 11. Power Gain and Drain Efficiency versus Output Power

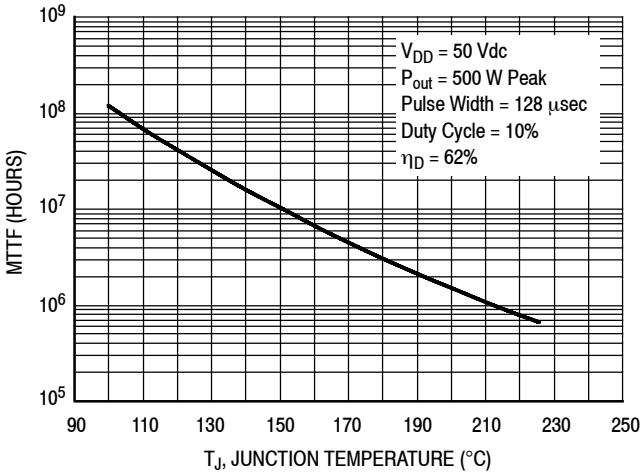

Note: MTTF value represents the total cumulative operating time under indicated test conditions.

MTTF calculator available at http://www.nxp.com/RF/calculators.

Figure 12. MTTF versus Junction Temperature

V_{DD} = 50 Vdc, I_{DQ} = 200 mA, P_{out} = 500 W Peak

f MHz	Z_{source} Ω	Z_{load} Ω
1030	1.36 – j1.27	2.50 – j0.17

Z_{source} = Test circuit impedance as measured from gate to ground.

Z_{load} = Test circuit impedance as measured from drain to ground.

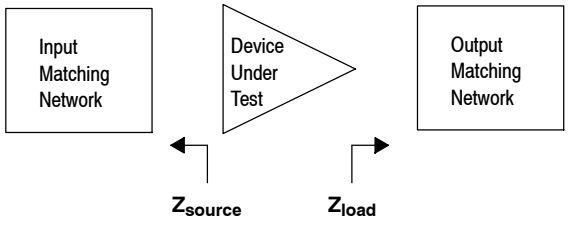

Figure 13. Series Equivalent Source and Load Impedance

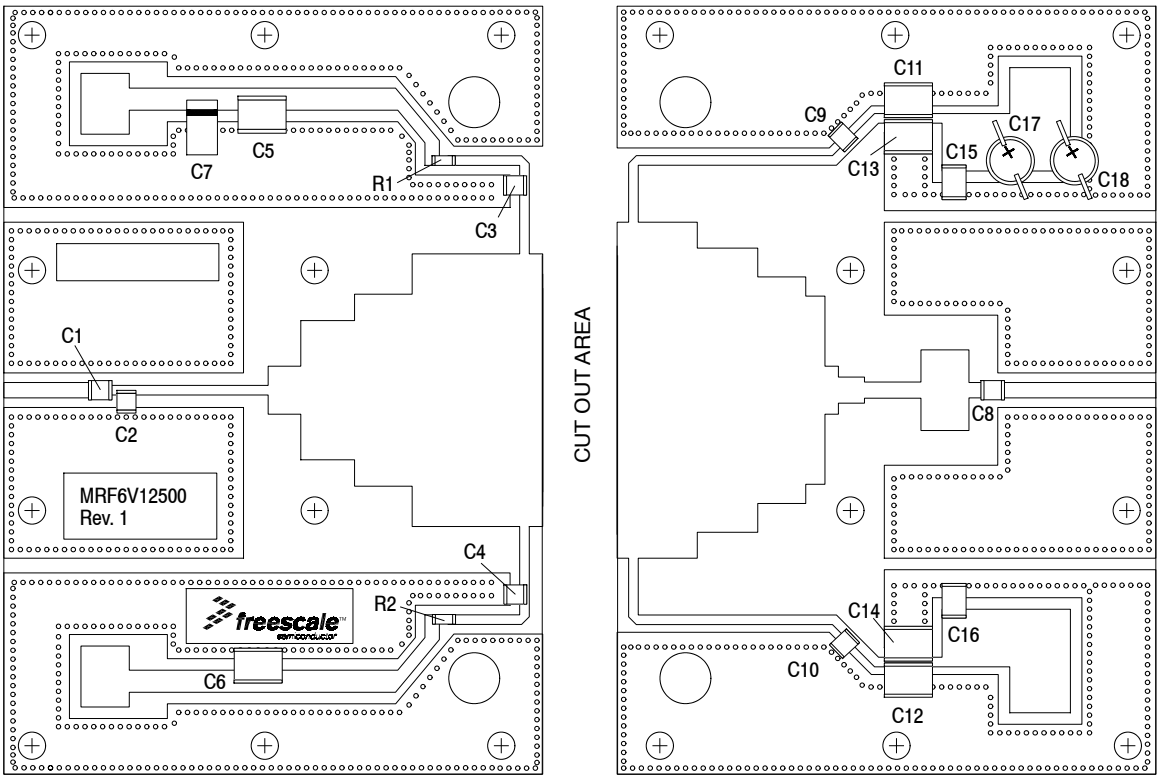

Figure 14. MRF6V12500H(HS) Test Circuit Component Layout — 960-1215 MHz

Table 7. MRF6V12500H(HS) Test Circuit Component Designations and Values — 960-1215 MHz

Part	Description	Part Number	Manufacturer
C1	2.2 pF Chip Capacitor	ATC100B2R2JT500XT	ATC
C2	0.2 pF Chip Capacitor	ATC100B0R2BT500XT	ATC
C3, C4	33 pF Chip Capacitors	ATC100B330JT500XT	ATC
C5, C6, C11, C12	2.2 μF, 100 V Chip Capacitors	G2225X7R225KT3AB	ATC
C7	22 μF, 35 V Tantalum Capacitor	T491X226K035AT	Kemet
C8	8.2 pF Chip Capacitor	ATC100B8R2CT500XT	ATC
C9, C10	39 pF Chip Capacitors	ATC100B390JT500XT	ATC
C13, C14	0.022 μF, 100 V Chip Capacitors	C1825C223K1GAC	Kemet
C15, C16	0.10 μF, 100 V Chip Capacitors	C1812F104K1RAC	Kemet
C17, C18	470 μF, 63 V Electrolytic Capacitors	MCGPR63V477M13X26-RH	Multicomp
R1, R2	22 Ω, 1/4 W Chip Resistors	CRCW120622R0FKEA	Vishay
PCB	0.030″, ε_r = 2.55	AD255A	Arlon

TYPICAL CHARACTERISTICS — 960–1215 MHz

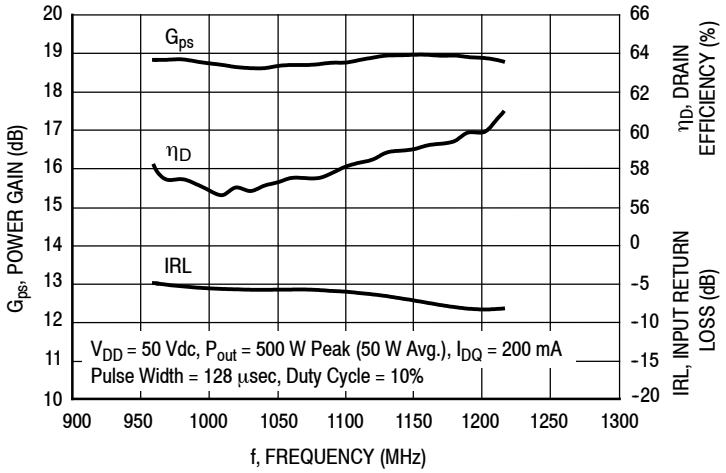

Figure 15. Power Gain, Drain Efficiency and IRL versus Frequency

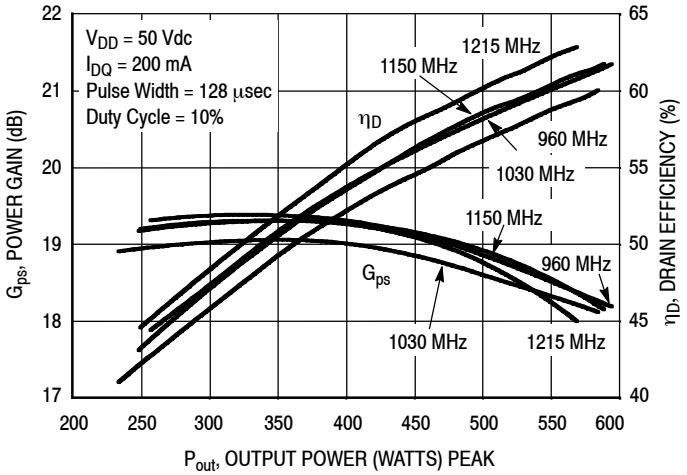

Figure 16. Power Gain and Drain Efficiency versus Output Power

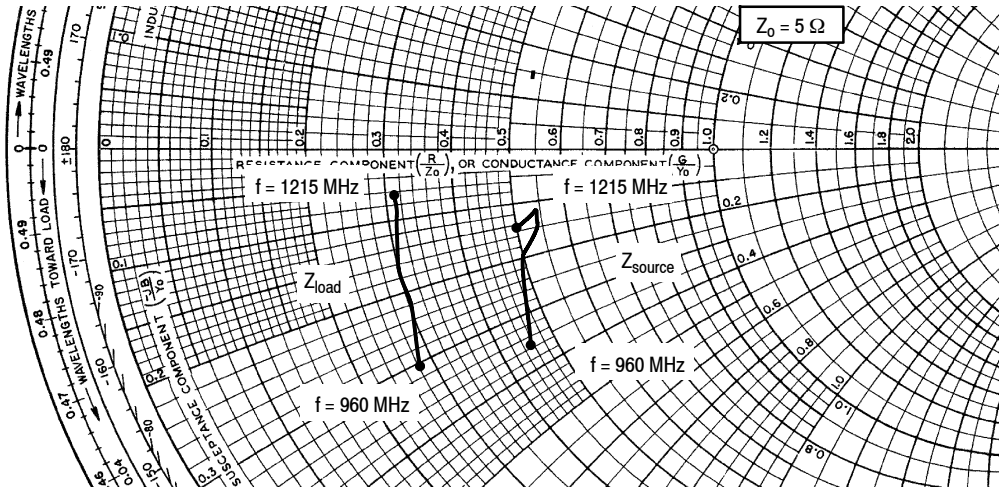

V_{DD} = 50 Vdc, I_{DQ} = 200 mA, P_{out} = 500 W Peak

f MHz	Z_{source} Ω	Z_{load} Ω
960	2.25 – j1.78	1.38 – j1.53
1030	2.51 – j1.02	1.48 – j1.11
1090	2.69 – j0.73	1.51 – j0.78
1150	2.71 – j0.65	1.53 – j0.49
1215	2.48 – j0.76	1.53 – j0.33

Z_{source} = Test circuit impedance as measured from gate to ground.

Z_{load} = Test circuit impedance as measured from drain to ground.

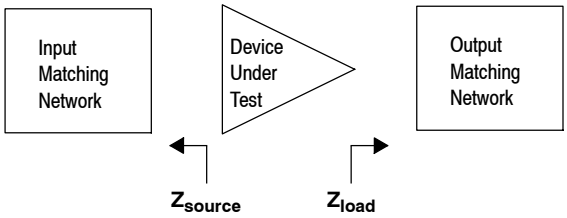

Figure 17. Series Equivalent Source and Load Impedance — 960–1215 MHz

PACKAGE DIMENSIONS

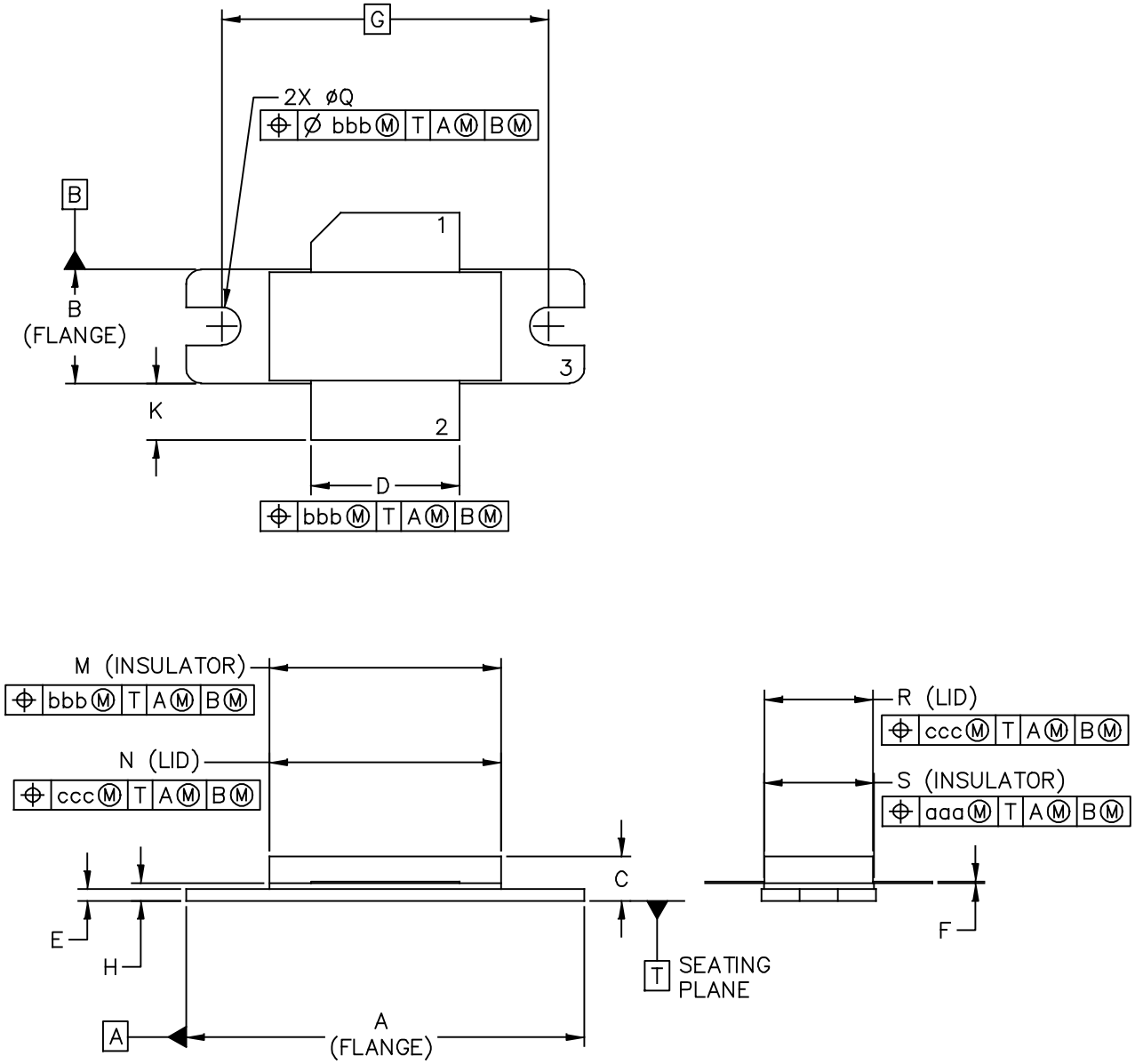

© NXP SEMICONDUCTORS N. V. ALL RIGHTS RESERVED	MECHANICAL OUTLINE	PRINT VERSION NOT TO SCALE
TITLE: NI−780	DOCUMENT NO: 98ASB15607C	REV: H
	STANDARD: NON−JEDEC	
	SOT1792−1	14 MAR 2016

NOTES:

1. DIMENSIONING AND TOLERANCING PER ANSI Y14.5M–1994.
2. CONTROLLING DIMENSION: INCH.
3. DELETED
4. DIMENSION H IS MEASURED .030 (.762) AWAY FROM PACKAGE BODY.

STYLE 1:
PIN 1. DRAIN
2. GATE
3. SOURCE

DIM	INCH MIN	INCH MAX	MILLIMETER MIN	MILLIMETER MAX	DIM	INCH MIN	INCH MAX	MILLIMETER MIN	MILLIMETER MAX
A	1.335	1.345	33.91	34.16	R	.365	.375	9.27	9.53
B	.380	.390	9.65	9.91	S	.365	.375	9.27	9.52
C	.125	.170	3.18	4.32	aaa	—	.005	—	0.127
D	.495	.505	12.57	12.83	bbb	—	.010	—	0.254
E	.035	.045	0.89	1.14	ccc	—	.015	—	0.381
F	.003	.006	0.08	0.15	—	—	—	—	—
G	1.100 BSC		27.94 BSC		—	—	—	—	—
H	.057	.067	1.45	1.7	—	—	—	—	—
K	.170	.210	4.32	5.33	—	—	—	—	—
M	.774	.786	19.66	19.96	—	—	—	—	—
N	.772	.788	19.6	20	—	—	—	—	—
Q	ø.118	ø.138	ø3	ø3.51	—	—	—	—	—

© NXP SEMICONDUCTORS N.V.
ALL RIGHTS RESERVED

MECHANICAL OUTLINE | PRINT VERSION NOT TO SCALE

TITLE: NI–780

DOCUMENT NO: 98ASB15607C REV: H

STANDARD: NON–JEDEC

SOT1792–1 14 MAR 2016

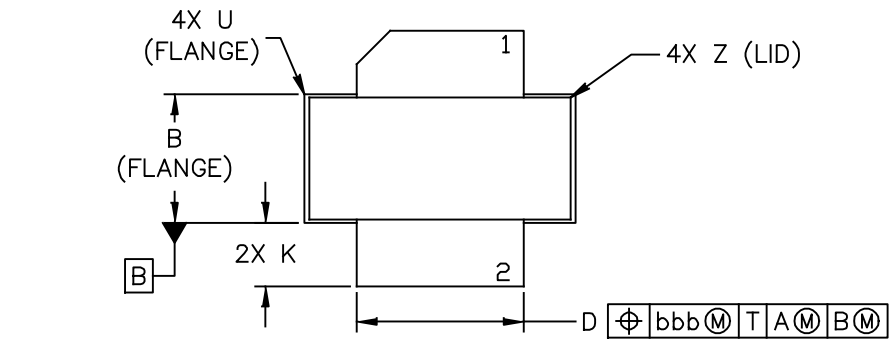

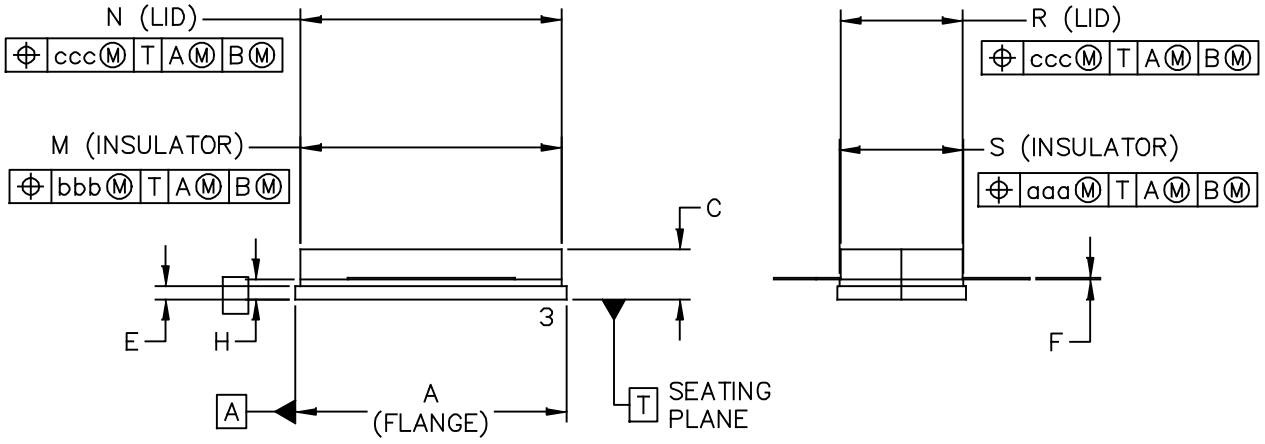

© NXP SEMICONDUCTORS N. V. ALL RIGHTS RESERVED	MECHANICAL OUTLINE	PRINT VERSION NOT TO SCALE
TITLE: NI−780S	DOCUMENT NO: 98ASB16718C	REV: J
	STANDARD: NON−JEDEC	
	SOT1793−1	15 MAR 2016

NOTES:

1. DIMENSIONING AND TOLERANCING PER ANSI Y14.5M–1994.
2. CONTROLLING DIMENSION: INCH.
3. DELETED
4. DIMENSION H IS MEASURED .030 (0.762) AWAY FROM PACKAGE BODY.

STYLE 1:
PIN 1. DRAIN
2. GATE
3. SOURCE

DIM	INCH MIN		MAX	MILLIMETER MIN		MAX	DIM	INCH MIN		MAX	MILLIMETER MIN		MAX
A	.805	–	.815	20.45	–	20.7	U	–	–	.040	–	–	1.02
B	.380	–	.390	9.65	–	9.91	Z	–	–	.030	–	–	0.76
C	.125	–	.170	3.18	–	4.32	aaa	–	.005	–	–	0.127	–
D	.495	–	.505	12.57	–	12.83	bbb	–	.010	–	–	0.254	–
E	.035	–	.045	0.89	–	1.14	ccc	–	.015	–	–	0.381	–
F	.003	–	.006	0.08	–	0.15	–	–	–	–	–	–	–
H	.057	–	.067	1.45	–	1.7	–	–	–	–	–	–	–
K	.170	–	.210	4.32	–	5.33	–	–	–	–	–	–	–
M	.774	–	.786	19.61	–	20.02	–	–	–	–	–	–	–
N	.772	–	.788	19.61	–	20.02	–	–	–	–	–	–	–
R	.365	–	.375	9.27	–	9.53	–	–	–	–	–	–	–
S	.365	–	.375	9.27	–	9.52	–	–	–	–	–	–	–

© NXP SEMICONDUCTORS N.V.
ALL RIGHTS RESERVED

MECHANICAL OUTLINE | PRINT VERSION NOT TO SCALE

TITLE: NI–780S

DOCUMENT NO: 98ASB16718C REV: J

STANDARD: NON–JEDEC

SOT1793–1 15 MAR 2016

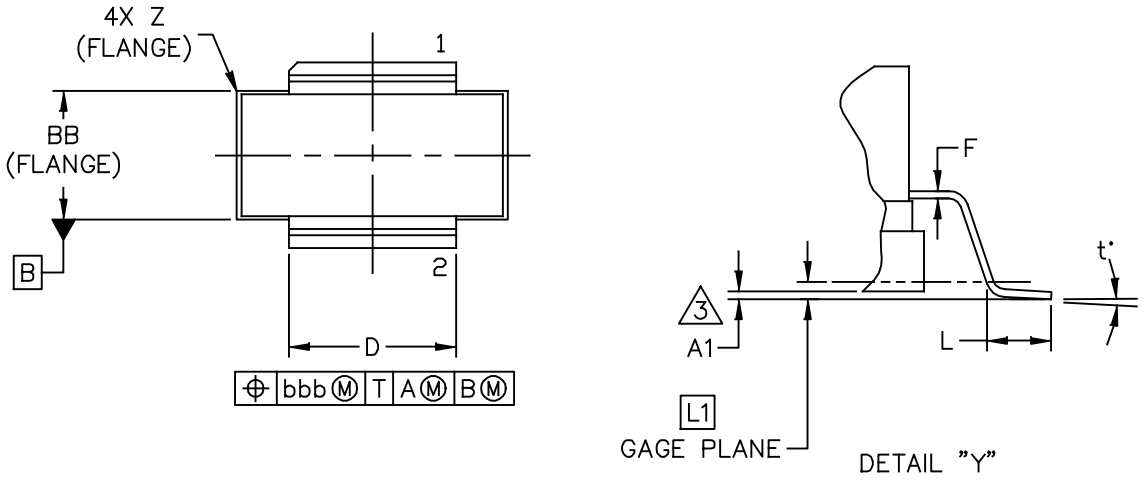

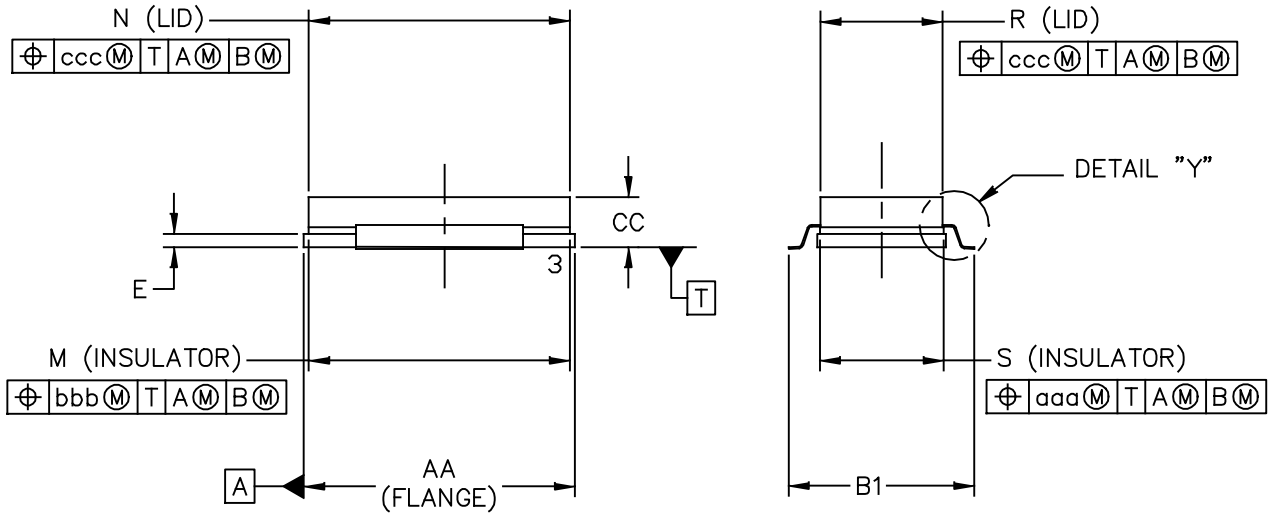

© NXP SEMICONDUCTORS N. V. ALL RIGHTS RESERVED	MECHANICAL OUTLINE	PRINT VERSION NOT TO SCALE
TITLE: NI-780GS-2L	DOCUMENT NO: 98ASA00193D	REV: C
	STANDARD: NON-JEDEC	
	SOT1802-1	22 FEB 2016

NOTES:

1. DIMENSIONING AND TOLERANCING PER ANSI Y14.5M–1994.

2. CONTROLLING DIMENSION: INCH.

3. DIMENSION A1 IS MEASURED WITH REFERENCE TO DATUM T. THE POSITIVE VALUE IMPLIES THAT THE PACKAGE BOTTOM IS HIGHER THAN THE LEAD BOTTOM.

DIM	INCH MIN	INCH MAX	MILLIMETER MIN	MILLIMETER MAX	DIM	INCH MIN	INCH MAX	MILLIMETER MIN	MILLIMETER MAX
AA	.805	.815	20.45	20.70	Z	R.000	R.040	R0.00	R1.02
A1	.002	.008	0.05	0.20	t°	0°	8°	0°	8°
BB	.380	.390	9.65	9.91					
B1	.546	.562	13.87	14.27					
CC	.125	.170	3.18	4.32	aaa		.005		0.13
D	.495	.505	12.57	12.83	bbb		.010		0.25
E	.035	.045	0.89	1.14	ccc		.015		0.38
F	.003	.006	0.08	0.15					
L	.038	.046	0.97	1.17					
L1	.010 BSC		0.25 BSC						
M	.774	.786	19.66	19.96					
N	.772	.788	19.61	20.02					
R	.365	.375	9.27	9.53					
S	.365	.375	9.27	9.53					

© NXP SEMICONDUCTORS N.V.
ALL RIGHTS RESERVED

MECHANICAL OUTLINE | PRINT VERSION NOT TO SCALE

TITLE: NI–780GS–2L

DOCUMENT NO: 98ASA00193D REV: C

STANDARD: NON–JEDEC

SOT1802–1 22 FEB 2016

PRODUCT DOCUMENTATION AND SOFTWARE

Refer to the following resources to aid your design process.

Application Notes

- AN1908: Solder Reflow Attach Method for High Power RF Devices in Air Cavity Packages
- AN1955: Thermal Measurement Methodology of RF Power Amplifiers

Engineering Bulletins

- EB212: Using Data Sheet Impedances for RF LDMOS Devices

Software

- Electromigration MTTF Calculator
- RF High Power Model

To Download Resources Specific to a Given Part Number:

1. Go to http://www.nxp.com/RF
2. Search by part number
3. Click part number link
4. Choose the desired resource from the drop down menu

REVISION HISTORY

The following table summarizes revisions to this document.

Revision	Date	Description
0	Sept. 2009	• Initial Release of Data Sheet
1	Apr. 2010	• Operating Junction Temperature increased from 200°C to 225°C in Maximum Ratings table and related “Continuous use at maximum temperature will affect MTTF” footnote added, p. 1 • Added RF High Power Model availability to Product Software, p. 9
2	Sept. 2010	• Maximum Ratings table: corrected V_{DSS} from -0.5, +100 to -0.5, +110 Vdc, p. 2 • Added 960-1215 MHz Broadband application as follows: - Typical Performance, p. 1, 2 - Fig. 13, Test Circuit Component Layout and Table 6, Test Circuit Component Designations and Values, p. 8 - Fig. 14, Pulsed Power Gain, Drain Efficiency and IRL versus Frequency, p. 9 - Fig. 15, Power Gain and Drain Efficiency versus Output Power, p. 9 - Fig. 16, Series Equivalent Source and Load Impedance, p. 10
3	June 2012	• Table 3, ESD Protection Characteristics: added the device’s ESD passing level as applicable to each ESD class, p. 2 • Modified figure titles and/or graph axes labels to clarify application use, p. 5, 6, 9 • Fig. 6, Output Power versus Input Power: corrected P_{out}, Output Power unit of measure to watts, p. 5 • Fig. 9, Output Power versus Input Power: corrected P_{out}, Output Power unit of measure to watts, p. 6 • Fig. 11, MTTF versus Junction Temperature: MTTF end temperature on graph changed to match maximum operating junction temperature, p. 6
4	Mar. 2015	• MRF6V12500HR3 tape and reel option replaced with MRF6V12500HR5 and MRF6V12500HSR3 tape and reel option replaced with MRF6V12500HSR5 per PCN15551 • Modified figure titles and/or graph axes labels to clarify application use, pp. 6, 7, 9 • Typical performance table: added Narrowband Mode S ELM application data, p. 1
5	July 2016	• Added part number MRF6V12500GS, pp. 1, 3 • Added NI-780GS-2L package isometric, p. 1, and Mechanical Outline, pp. 15-16

How to Reach Us:

Home Page:
freescale.com

Web Support:
freescale.com/support

Information in this document is provided solely to enable system and software implementers to use Freescale products. There are no express or implied copyright licenses granted hereunder to design or fabricate any integrated circuits based on the information in this document.

Freescale reserves the right to make changes without further notice to any products herein. Freescale makes no warranty, representation, or guarantee regarding the suitability of its products for any particular purpose, nor does Freescale assume any liability arising out of the application or use of any product or circuit, and specifically disclaims any and all liability, including without limitation consequential or incidental damages. “Typical” parameters that may be provided in Freescale data sheets and/or specifications can and do vary in different applications, and actual performance may vary over time. All operating parameters, including “typicals,” must be validated for each customer application by customer’s technical experts. Freescale does not convey any license under its patent rights nor the rights of others. Freescale sells products pursuant to standard terms and conditions of sale, which can be found at the following address: freescale.com/SalesTermsandConditions.

Freescale and the Freescale logo are trademarks of Freescale Semiconductor, Inc., Reg. U.S. Pat. & Tm. Off. All other product or service names are the property of their respective owners.
© 2009–2010, 2012, 2015–2016 Freescale Semiconductor, Inc.

Document Number: MRF6V12500H
Rev. 5, 7/2016