Document Number: MC33MR2001RSM
Rev. 2.0, 9/2016

76-77 GHz RF receiver front-end for W-band radar applications

MR2001R

ADVANCED DRIVER ASSISTANCE SYSTEM

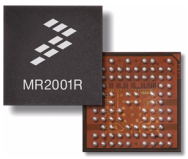

VK SUFFIX (PB-FREE)
98ASA00540D
6.0 X 6.0 X 0.95 RCPBGA

The MR2001 is a scalable three package solution for automotive radar modules. The chipset consists of a four channel VCO (voltage controlled oscillator), a two-channel Tx transmitter, and a three-channel Rx receiver. The MR2001R is a high performance, highly integrated, three-channel, receiver (RX) ideally suited for automotive radar applications. In conjunction with the MR2001V, a four-channel voltage controlled oscillator, and an MR2001T, a two-channel transmitter, it provides a scalable three package solution for automotive radar modules.

Features

- 76 GHz to 77 GHz RX input
- Supply voltage 3.3 V
- Supply current typ. 240 mA
- Power dissipation typ. 0.8 W
- Conversion gain 23 dB to 60 dB
- SSB noise figure typical 14 dB
- Saturation detectors
- Tri-state IF outputs

Applications

- Automotive proximity radar
- LRR, MRR and SRR
- ADAS
- Industrial surveillance and security systems

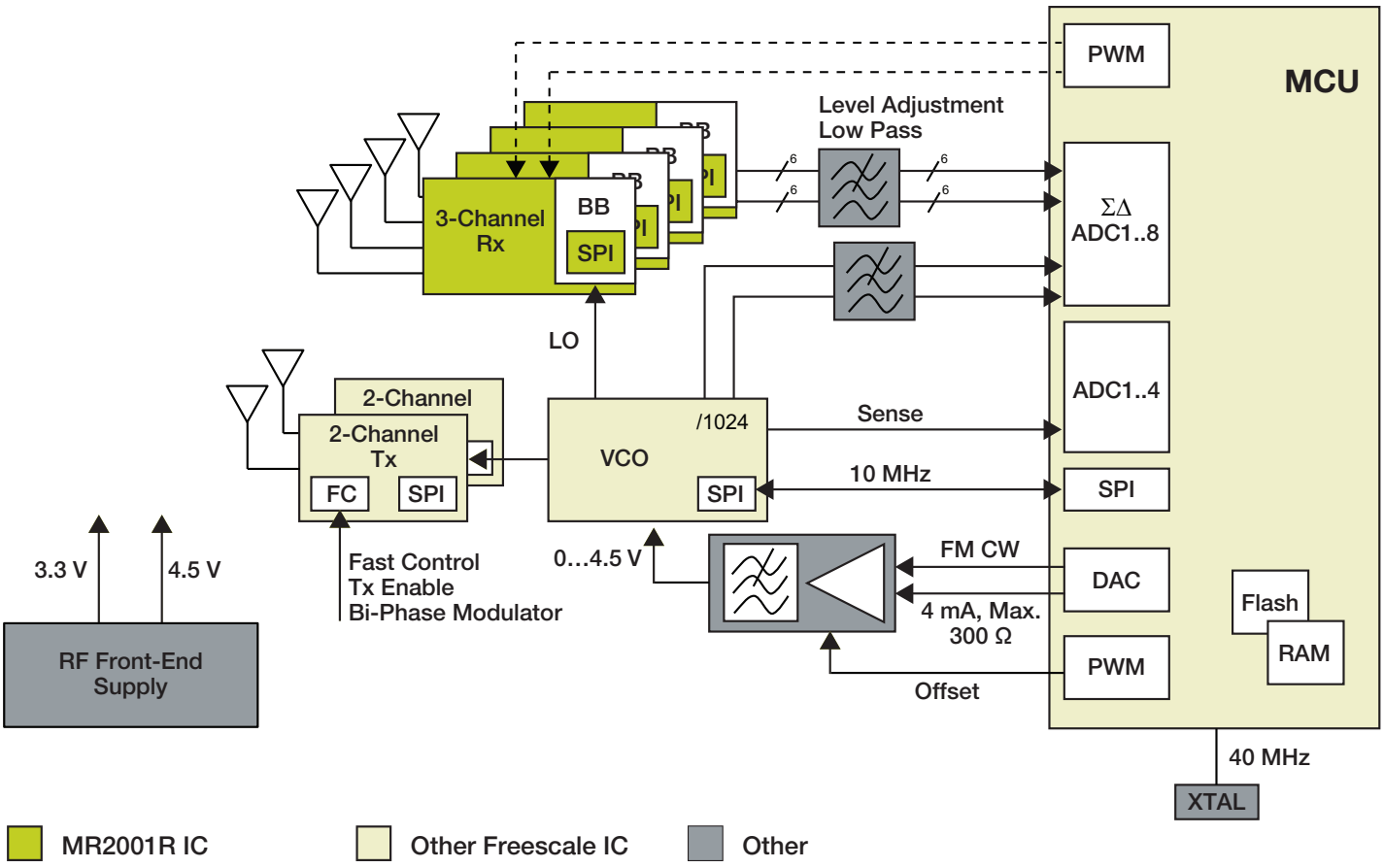

Figure 1. MR2001R simplified application diagram

* This document contains certain information on a new product.
Specifications and information herein are subject to change without notice.

© 2016 NXP B.V.

Table 1. Orderable part variations

Part number	Temperature (temp)	Package	Notes
MC33MR2001RVK	-40 °C to 125 °C	6.0 x 6.0 mm RCP (10 x 11 array) 0.5 mm pitch	(1)

Notes

1. To order parts in Tape & Reel, add R2 to the suffix of the part number.

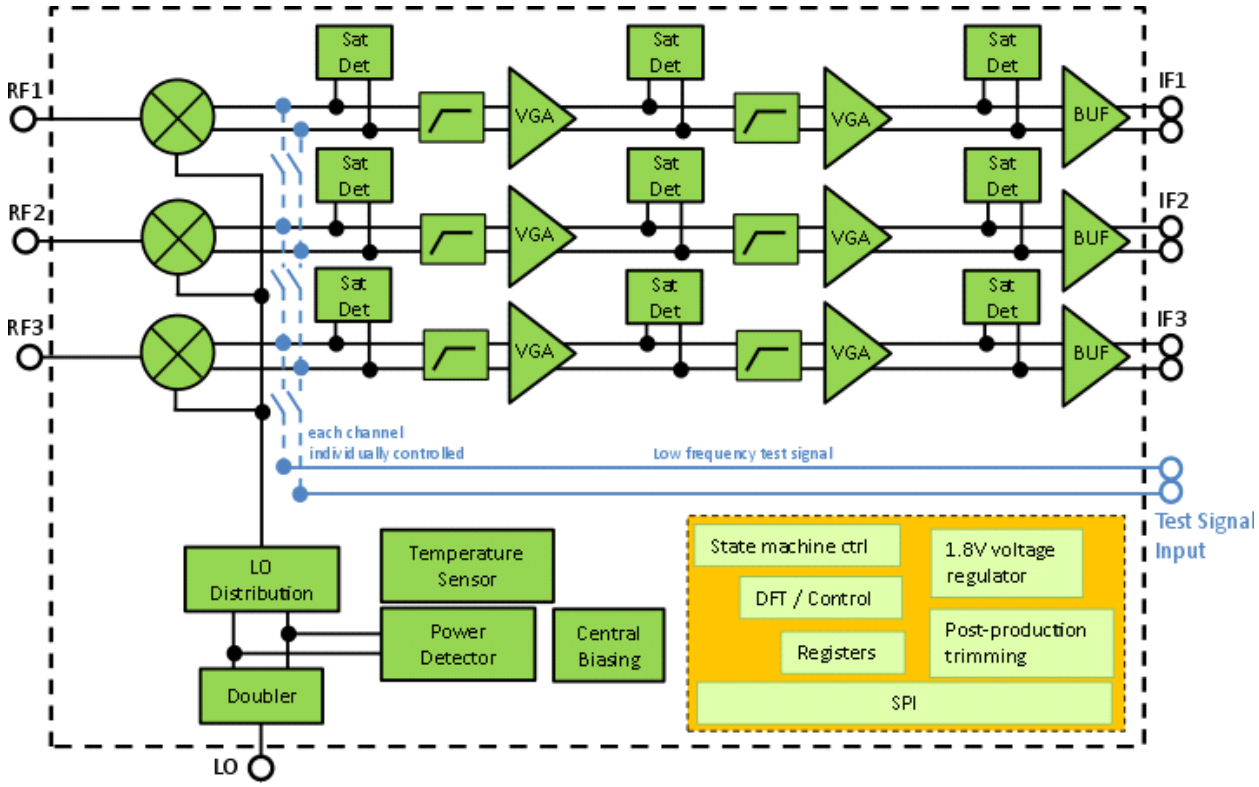

Figure 2. MR2001R three-channel receiver block diagram

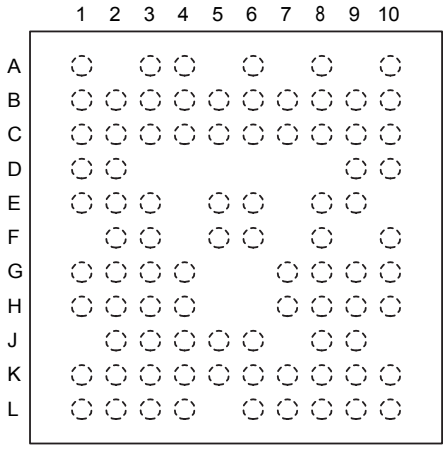

Figure 3. MR2001R pinout (ball) diagram

Table 2. MR2001R pin definitions

Ball location	Pin function
A1, A10, D1, D2, E8, F5, F6, F8, G4, G7, G8, G9, G10, H4, H7, K7, L1, L2, L3, L7, L8, L9, L10	DC Ground
A3	SPI MOSI (master out, slave in)
A4	Digital hard reset signal
A6	Differential IF output channel 1
A8	Differential IF output channel 3
B1	SPI enable (chip enable)
B2	SPI serial clock
B3	SPI MISO (master in, slave out)
B4	Digital scan test
B5	Differential IF output channel 2
B6	Differential IF output channel 2
B7	Differential IF output channel 1
B8	Differential IF output channel 3

Ball location	Pin function
C1, C2	3.3 V Power Supply
C6	3.3 V Power Supply
C8	3.3 V Power Supply
D9	Sensor output (temperature and power peak detector)
D10	Bandgap reference resistor (positive temperature slope)
E1, E2, E3, F3, G1, G2, G3, H1, H2, H3, H8, H9, H10, J3, J4, J5, J6, J8, K1, K2, K3, K4, K6, K8, K9, K10, L4, L6	RF Ground
E5	Chip key Bit [1]
E6	Chip key bit [0]
E9	Saturation detector output
F2	77 GHz RX input channel 2
F10	Bandgap reference resistor (negative temperature slope)
J2	77 GHz RX input channel 1
J9	77 GHz RX input channel 3
K5	LO input

Table 3. Key parameters

Temp = -40 °C to +125 °C, f_{OUT} = 76 to 77 GHz, and V_{CC3P3} = 3.3 V ±5.0%, unless otherwise noted.

Symbol	Parameter	Typ.	Unit	Notes
V_{CC}	Supply Voltage, Nominal supply ±5% variation	3.3	V	
I_{CC}	Supply Current (all channels on)	242	mA	
I_{CC0}	Supply Current S0 (chip de-activated)	19	mA	
P_{ON}	Power Consumption (on)	0.8	W	
BB parameters				
f_{HP}	High-pass (HP) Filter Edge Frequency (-6.0 dB)	300	kHz	
s_{HP}	Slope Below f_HP	40	dB/decade	
LP_order	Low Pass Filter (LP) Order - center freq. at approx. 8.0 MHz - information only	1.0	–	
Conversion gain				
CG_{MAX}	Max. Conversion Gain at f = 4.0 MHz - 22 dB 1st VGA, 16 dB 2nd VGA	57	dB	
CG_{MIN}	Min. Conversion Gain at f = 4.0 MHz - 10 dB 1st VGA, -2.0 dB 2nd VGA	26.5	dB	
CG_{STEP}	Conversion Gain Step-size (VGA settings)	5.5	dB	
Control				
R_{SAT}	Overload Detected Output Load	365	W	
P_MIXER_SAT	Input Referred Saturation Detector Threshold at CG = min at f = 10 kHz	-3.0	dBm	
V_{VGA1_SAT}	1st VGA Stage Output Saturation Level (stage directly after mixer core)	400	mVpk	
V_{VGA2_SAT}	2nd VGA Stage Output Saturation Level	350	mVpk	

Table 4. Revision history

Revision	Date	Description of changes
1.0	6/2015	• Initial release
2.0	9/2016	• Added revision history table • Modified the target application lists • Updated Figure 2

How to Reach Us:

Home Page:
NXP.com

Web Support:
http://www.nxp.com/support

Information in this document is provided solely to enable system and software implementers to use NXP products. There are no expressed or implied copyright licenses granted hereunder to design or fabricate any integrated circuits based on the information in this document. NXP reserves the right to make changes without further notice to any products herein.

NXP makes no warranty, representation, or guarantee regarding the suitability of its products for any particular purpose, nor does NXP assume any liability arising out of the application or use of any product or circuit, and specifically disclaims any and all liability, including without limitation, consequential or incidental damages. "Typical" parameters that may be provided in NXP data sheets and/or specifications can and do vary in different applications, and actual performance may vary over time. All operating parameters, including "typicals," must be validated for each customer application by the customer's technical experts. NXP does not convey any license under its patent rights nor the rights of others. NXP sells products pursuant to standard terms and conditions of sale, which can be found at the following address:

http://www.nxp.com/terms-of-use.html.

NXP, the NXP logo, Freescale, the Freescale logo and SMARTMOS are trademarks of NXP B.V. All other product or service names are the property of their respective owners. All rights reserved.

© 2016 NXP B.V.

Document Number: MC33MR2001RSM
Rev. 2.0
9/2016