200 kPa On-Chip Temperature Compensated and Calibrated Silicon Pressure Sensors

MPXM2202 SERIES

COMPENSATED AND CALIBRATED PRESSURE SENSOR
0 TO 200 kPA (0 TO 29 psi)
40 mV FULL SCALE SPAN (TYPICAL)

The MPXM2202 device is a silicon piezoresistive pressure sensors providing a highly accurate and linear voltage output directly proportional to the applied pressure. The sensor is a single, monolithic silicon diaphragm with the strain gauge and a thin-film resistor network integrated on-chip. The chip is laser trimmed for precise span and offset calibration and temperature compensation.

Features

- Temperature Compensated Over 0°C to + 85°C
- Available in Easy-to-Use Tape and Reel
- Ratiometric to Supply Voltage
- Gauge Ported and Non Ported Options

Typical Applications

- Pump/Motor Controllers
- Robotics
- Level Indicators
- Medical Diagnostics
- Pressure Switching
- Barometers
- Altimeters

MPAK PACKAGE

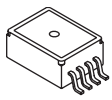

MPXM2202D/A
CASE 1320-02

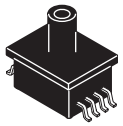

MPXM2202GS/AS
CASE 1320A-02

ORDERING INFORMATION					
Device Type	**Options**	**Case No.**	**MPX Series Order No.**	**Packing Options**	**Device Marking**
Non-ported	Absolute, Element Only	1320	MPXM2202D	Rails	MPXM2202D
	Absolute, Element Only	1320	MPXM2202DT1	Tape & Reel	MPXM2202D
	Absolute, Element Only	1320	MPXM2202A	Rails	MPXM2202A
	Absolute, Element Only	1320	MPXM2202AT1	Tape & Reel	MPXM2202A
Ported	Absolute, Axial Port	1320A	MPXM2202GS	Rails	MPXM2202G
	Absolute, Axial Port	1320A	MPXM2202GST1	Tape & Reel	MPXM2202G
	Absolute, Axial Port	1320A	MPXM2202AS	Rails	MPXM2202A
	Absolute, Axial Port	1320A	MPXM2202AST1	Tape & Reel	MPXM2202A

PIN NUMBER			
1	GND	3	V_S
2	$+V_{OUT}$	4	$-V_{OUT}$

© Freescale Semiconductor, Inc., 2005. All rights reserved.

freescale semiconductor

Figure 1 shows a block diagram of the internal circuitry on the stand-alone pressure sensor chip.

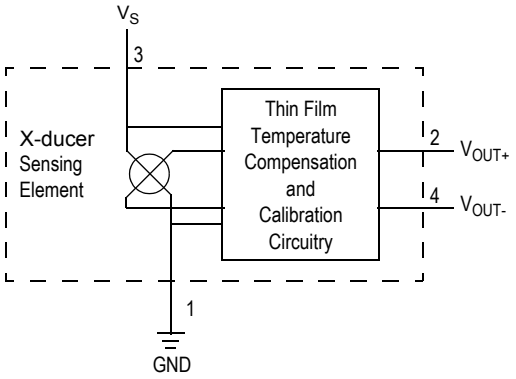

Figure 1. Temperature Compensated Pressure Sensor Schematic

VOLTAGE OUTPUT VERSUS APPLIED DIFFERENTIAL PRESSURE

The differential voltage output of the sensor is directly proportional to the differential pressure applied.

The output voltage of the differential or gauge sensor increases with increasing pressure applied to the pressure side relative to the vacuum side. Similarly, output voltage increases as increasing vacuum is applied to the vacuum side relative to the pressure side.

Table 1. Maximum Ratings(1)

Rating	Symbol	Value	Unit
Maximum Pressure	P_{max}	400	kPa
Storage Temperature	T_{stg}	-40 to +125	°C
Operating Temperature	T_A	-40 to +125	°C

1. Exposure beyond the specified limits may cause permanent damage or degradation to the device.

Table 2. Operating Characteristics (V_S = 10 Vdc, T_A = 25°C.)

Characteristic		Symbol	Min	Typ	Max	Unit
Pressure Range[1]		P_{OP}	0	—	200	kPa
Supply Voltage[2]		V_S	—	10	16	Vdc
Supply Current		I_O	—	6.0	—	mAdc
Full Scale Span[3]		V_{FSS}	38.5	40	41.5	mV
Offset[4]	MPXM2202D/G Series MPXM2202A Series	V_{OFF}	-1.0 -2.0	— —	1.0 2.0	mV
Sensitivity		$\Delta V/\Delta P$	—	0.2	—	mV/kPa
Linearity[5]	MPXM2202D/G Series MPXM2202A Series	— —	-0.6 -1.0	— —	0.4 1.0	$\%V_{FSS}$
Pressure Hysteresis[5] (0 to 100 kPa)		—	—	±0.1	—	$\%V_{FSS}$
Temperature Hysteresis[5] (-40°C to +125°C)		—	—	±0.5	—	$\%V_{FSS}$
Temperature Effect on Full Scale Span[5]		TCV_{FSS}	-2.0	—	2.0	$\%V_{FSS}$
Temperature Effect on Offset[5]		TCV_{OFF}	-1.0	—	1.0	mV
Input Impedance		Z_{IN}	1000	—	2500	Ω
Output Impedance		Z_{OUT}	1400	—	3000	Ω
Response Time[6] (10% to 90%)		t_R	—	1.0	—	ms
Warm-Up		—	—	20	—	ms
Offset Stability[7]		—	—	±0.5	—	$\%V_{FSS}$

1. 1.0 kPa (kiloPascal) equals 0.145 psi.
2. Device is ratiometric within this specified excitation range. Operating the device above the specified excitation range may induce additional error due to device self-heating.
3. Full Scale Span (V_{FSS}) is defined as the algebraic difference between the output voltage at full rated pressure and the output voltage at the minimum rated pressure.
4. Offset (V_{off}) is defined as the output voltage at the minimum rated pressure.
5. Accuracy (error budget) consists of the following:
   - Linearity: Output deviation from a straight line relationship with pressure, using end point method, over the specified pressure range.
   - Pressure Hysteresis: Output deviation at any pressure within the specified range, when this pressure is cycled to and from the minimum or maximum rated pressure, at 25°C.
   - Temperature Hysteresis: Output deviation at any temperature within the operating temperature range, after the temperature is cycled to and from the minimum or maximum operating temperature points, with zero differential pressure applied.
   - TcSpan: Output deviation at full rated pressure over the temperature range of 0 to 85°C, relative to 25°C.
   - TcOffset: Output deviation with minimum rated pressure applied, over the temperature range of 0 to 85°C, relative to 25°C.
6. Response Time is defined as the time for the incremental change in the output to go from 10% to 90% of its final value when subjected to a specified step change in pressure.
7. Offset stability is the product's output deviation when subjected to 1000 hours of Pulsed Pressure, Temperature Cycling with Bias Test.

LINEARITY

Linearity refers to how well a transducer's output follows the equation: $V_{OUT} = V_{OFF}$ + sensitivity x P over the operating pressure range. There are two basic methods for calculating nonlinearity: (1) end point straight line fit (see Figure 2) or (2) a least squares best line fit. While a least squares fit gives the “best case” linearity error (lower numerical value), the calculations required are burdensome.

Conversely, an end point fit will give the “worst case” error (often more desirable in error budget calculations) and the calculations are more straightforward for the user. The specified pressure sensor linearities are based on the end point straight line method measured at the midrange pressure.

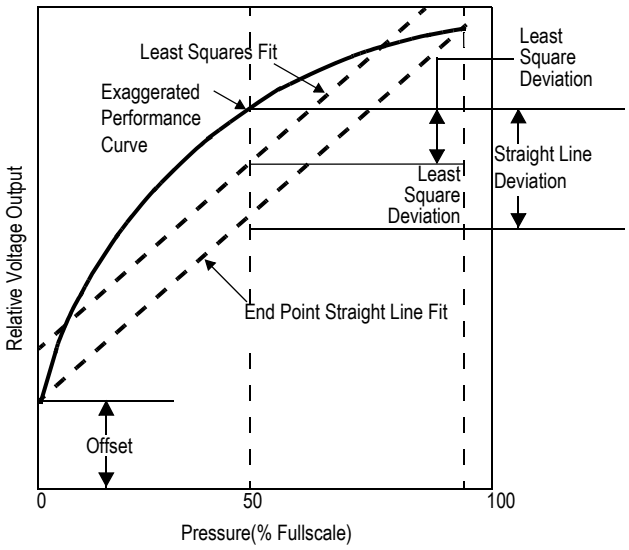

Figure 2. Linearity Specification Comparison

ON-CHIP TEMPERATURE COMPENSATION AND CALIBRATION

Figure 3 shows the minimum, maximum and typical output characteristics of the MPXM2202 series at 25°C. The output is directly proportional to the differential pressure and is essentially a straight line.

A silicone gel isolates the die surface and wire bonds from the environment, while allowing the pressure signal to be transmitted to the silicon diaphragm.

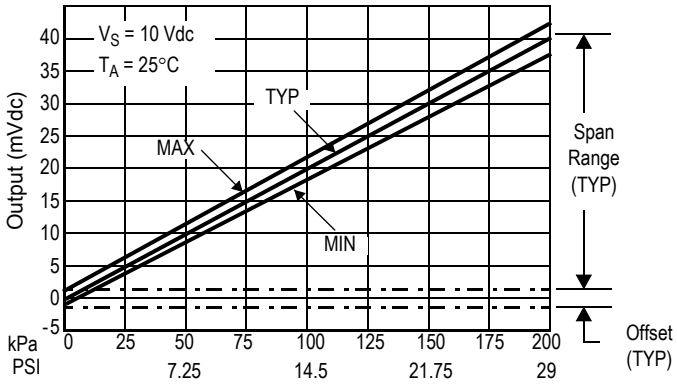

Figure 3. Output versus Pressure Differential

PACKAGE DIMENSIONS

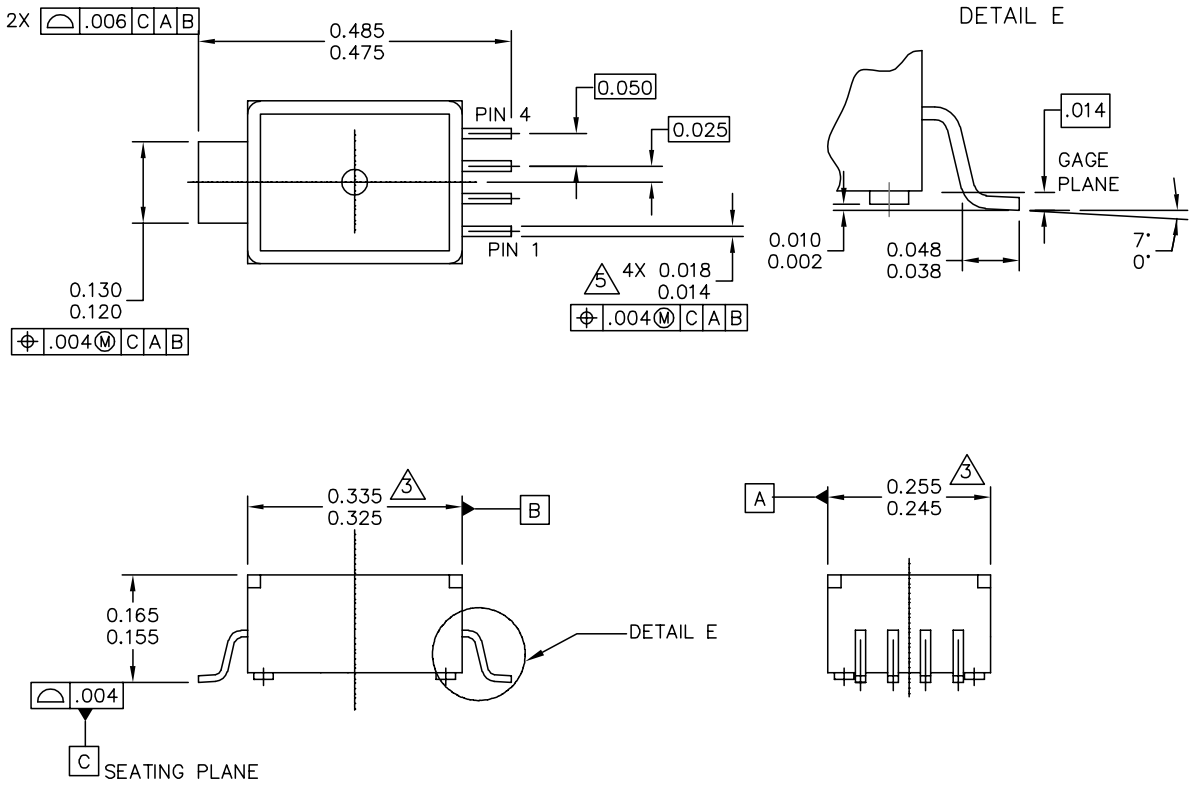

© FREESCALE SEMICONDUCTOR, INC. ALL RIGHTS RESERVED.	MECHANICAL OUTLINE	PRINT VERSION NOT TO SCALE
TITLE: 5 LD M–PAC	DOCUMENT NO: 98ARH99088A	REV: B
	CASE NUMBER: 1320-02	22 JUL 2005
	STANDARD: NON-JEDEC	

PAGE 1 OF 2

CASE 1320-02
ISSUE B

PACKAGE DIMENSIONS

NOTES:

1. DIMENSIONS ARE IN INCHES.
2. INTERPRET DIMENSIONS AND TOLERANCES PER ASME Y14.5M–1994.
3. DIMENSION DOES NOT INCLUDE MOLD FLASH OR PROTRUSION. MOLD FLASH OR PROTRUSION SHALL NOT EXCEED .006" PER SIDE.
4. ALL VERTICAL SURFACES TO BE 5° MAXIMUM.
5. DIMENSION DOES NOT INCLUDE DAMBAR PROTRUSION. ALLOWABLE DAMBAR PROTRUSION SHALL BE .008 MAXIMUM.

PIN 1: GND
PIN 2: +Vout
PIN 3: Vs
PIN 4: −Vout

© FREESCALE SEMICONDUCTOR, INC.
ALL RIGHTS RESERVED.

MECHANICAL OUTLINE	PRINT VERSION NOT TO SCALE

TITLE:	DOCUMENT NO: 98ARH99088A	REV: B
5 LD M–PAC	CASE NUMBER: 1320–02	22 JUL 2005
	STANDARD: NON–JEDEC	

CASE 1320-02
ISSUE B

PACKAGE DIMENSIONS

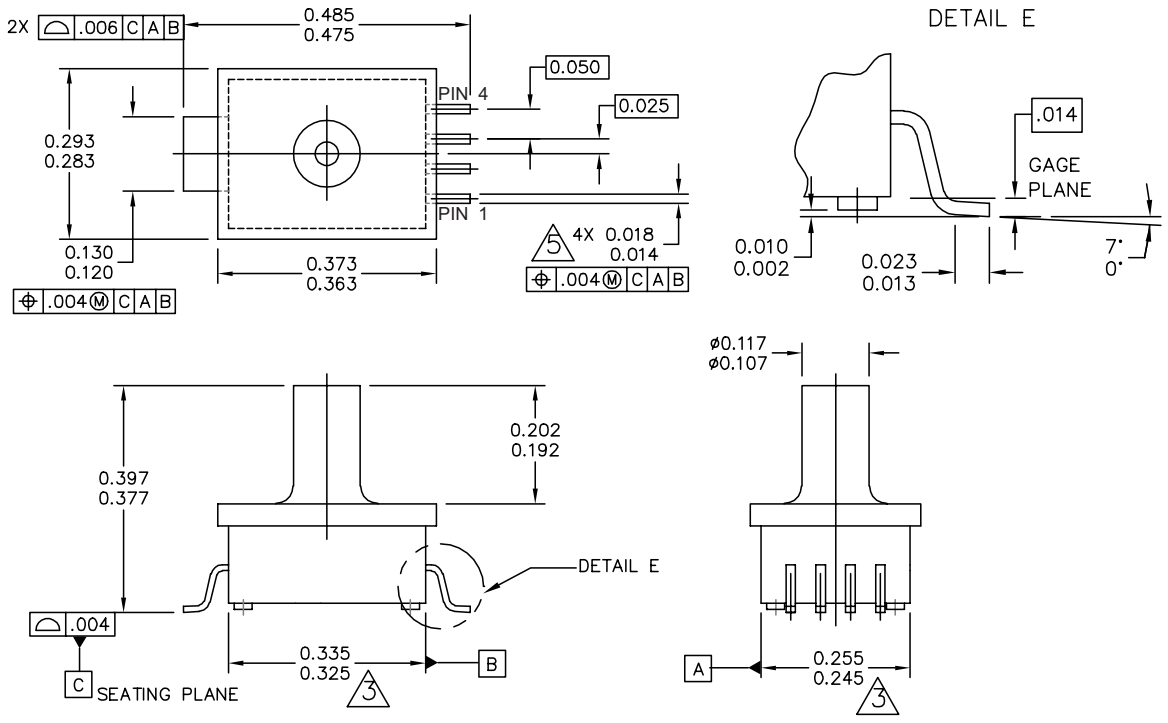

© FREESCALE SEMICONDUCTOR, INC. ALL RIGHTS RESERVED.	MECHANICAL OUTLINE	PRINT VERSION NOT TO SCALE
TITLE: 5 LD M–PAC, PORTED	DOCUMENT NO: 98ARH99087A	REV: A
	CASE NUMBER: 1320A–02	22 JUL 2005
	STANDARD: NON–JEDEC	

PAGE 1 OF 2

CASE 1320A-02
ISSUE A

PACKAGE DIMENSIONS

NOTES:

1. DIMENSIONS ARE IN INCHES.

2. INTERPRET DIMENSIONS AND TOLERANCES PER ASME Y14.5M–1994.

3. DIMENSIONS DOES NOT INCLUDE MOLD FLASH OR PROTRUSION. MOLD FLASH OR PROTRUSION SHALL NOT EXCEED .006" PER SIDE.

4. ALL VERTICAL SURFACES TO BE 5" MAXIMUM.

5. DIMENSION DOES NOT INCLUDE DAMBAR PROTRUSION. ALLOWABLE DAMBAR PROTRUSION SHALL BE .008 MAXIMUM.

© FREESCALE SEMICONDUCTOR, INC. ALL RIGHTS RESERVED.	**MECHANICAL OUTLINE**	PRINT VERSION NOT TO SCALE	
TITLE: 5 LD M–PAC, PORTED	DOCUMENT NO: 98ARH99087A		REV: A
	CASE NUMBER: 1320A–02		22 JUL 2005
	STANDARD: NON–JEDEC		

CASE 1320A-02
ISSUE A

How to Reach Us:

Home Page:
www.freescale.com

E-mail:
support@freescale.com

USA/Europe or Locations Not Listed:
Freescale Semiconductor
Technical Information Center, CH370
1300 N. Alma School Road
Chandler, Arizona 85224
+1-800-521-6274 or +1-480-768-2130
support@freescale.com

Europe, Middle East, and Africa:
Freescale Halbleiter Deutschland GmbH
Technical Information Center
Schatzbogen 7
81829 Muenchen, Germany
+44 1296 380 456 (English)
+46 8 52200080 (English)
+49 89 92103 559 (German)
+33 1 69 35 48 48 (French)
support@freescale.com

Japan:
Freescale Semiconductor Japan Ltd.
Headquarters
ARCO Tower 15F
1-8-1, Shimo-Meguro, Meguro-ku,
Tokyo 153-0064
Japan
0120 191014 or +81 3 5437 9125
support.japan@freescale.com

Asia/Pacific:
Freescale Semiconductor Hong Kong Ltd.
Technical Information Center
2 Dai King Street
Tai Po Industrial Estate
Tai Po, N.T., Hong Kong
+800 2666 8080
support.asia@freescale.com

For Literature Requests Only:
Freescale Semiconductor Literature Distribution Center
P.O. Box 5405
Denver, Colorado 80217
1-800-441-2447 or 303-675-2140
Fax: 303-675-2150
LDCForFreescaleSemiconductor@hibbertgroup.com

Information in this document is provided solely to enable system and software implementers to use Freescale Semiconductor products. There are no express or implied copyright licenses granted hereunder to design or fabricate any integrated circuits or integrated circuits based on the information in this document.

Freescale Semiconductor reserves the right to make changes without further notice to any products herein. Freescale Semiconductor makes no warranty, representation or guarantee regarding the suitability of its products for any particular purpose, nor does Freescale Semiconductor assume any liability arising out of the application or use of any product or circuit, and specifically disclaims any and all liability, including without limitation consequential or incidental damages. “Typical” parameters that may be provided in Freescale Semiconductor data sheets and/or specifications can and do vary in different applications and actual performance may vary over time. All operating parameters, including “Typicals”, must be validated for each customer application by customer’s technical experts. Freescale Semiconductor does not convey any license under its patent rights nor the rights of others. Freescale Semiconductor products are not designed, intended, or authorized for use as components in systems intended for surgical implant into the body, or other applications intended to support or sustain life, or for any other application in which the failure of the Freescale Semiconductor product could create a situation where personal injury or death may occur. Should Buyer purchase or use Freescale Semiconductor products for any such unintended or unauthorized application, Buyer shall indemnify and hold Freescale Semiconductor and its officers, employees, subsidiaries, affiliates, and distributors harmless against all claims, costs, damages, and expenses, and reasonable attorney fees arising out of, directly or indirectly, any claim of personal injury or death associated with such unintended or unauthorized use, even if such claim alleges that Freescale Semiconductor was negligent regarding the design or manufacture of the part.

Freescale™ and the Freescale logo are trademarks of Freescale Semiconductor, Inc. All other product or service names are the property of their respective owners.

© Freescale Semiconductor, Inc. 2005. All rights reserved.

MPXM2202
Rev. 2
09/2005