One Watt Darlington Transistors

NPN Silicon

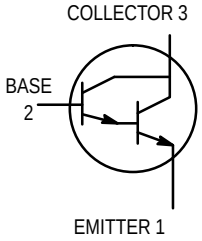

MPSW45
MPSW45A*

***Motorola Preferred Device**

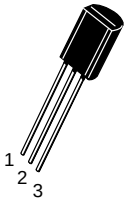

CASE 29–05, STYLE 1
TO–92 (TO–226AE)

MAXIMUM RATINGS

Rating	Symbol	MPSW45	MPSW45A	Unit
Collector–Emitter Voltage	V_{CES}	40	50	Vdc
Collector–Base Voltage	V_{CBO}	50	60	Vdc
Emitter–Base Voltage	V_{EBO}	12	12	Vdc
Collector Current — Continuous	I_C	1.0	1.0	Adc
Total Device Dissipation @ T_A = 25°C Derate above 25°C	P_D	1.0 8.0		Watts mW/°C
Total Device Dissipation @ T_C = 25°C Derate above 25°C	P_D	2.5 20		Watts mW/°C
Operating and Storage Junction Temperature Range	T_J, T_{stg}	–55 to +150		°C

THERMAL CHARACTERISTICS

Characteristic	Symbol	Max	Unit
Thermal Resistance, Junction to Ambient	$R_{\theta JA}$	125	°C/W
Thermal Resistance, Junction to Case	$R_{\theta JC}$	50	°C/W

ELECTRICAL CHARACTERISTICS (T_A = 25°C unless otherwise noted)

Characteristic		Symbol	Min	Max	Unit
OFF CHARACTERISTICS					
Collector–Emitter Breakdown Voltage (I_C = 100 μAdc, V_{BE} = 0)	 MPSW45 MPSW45A	$V_{(BR)CES}$	 40 50	 — —	Vdc
Collector–Base Breakdown Voltage (I_C = 100 μAdc, I_E = 0)	 MPSW45 MPSW45A	$V_{(BR)CBO}$	 50 60	 — —	Vdc
Emitter–Base Breakdown Voltage (I_E = 10 μAdc, I_C = 0)		$V_{(BR)EBO}$	12	—	Vdc
Collector Cutoff Current (V_{CB} = 30 Vdc, I_E = 0) (V_{CB} = 40 Vdc, I_E = 0)	 MPSW45 MPSW45A	I_{CBO}	 — —	 100 100	nAdc
Emitter Cutoff Current (V_{EB} = 10 Vdc, I_C = 0)		I_{EBO}	—	100	nAdc

Preferred devices are Motorola recommended choices for future use and best overall value.

© Motorola, Inc. 1996

ELECTRICAL CHARACTERISTICS (T_A = 25°C unless otherwise noted) (Continued)

Characteristic	Symbol	Min	Max	Unit
ON CHARACTERISTICS(1)				
DC Current Gain (I_C = 200 mAdc, V_{CE} = 5.0 Vdc) (I_C = 500 mAdc, V_{CE} = 5.0 Vdc) (I_C = 1.0 Adc, V_{CE} = 5.0 Vdc)	h_{FE}	 25,000 15,000 4,000	 150,000 — —	—
Collector–Emitter Saturation Voltage (I_C = 1.0 Adc, I_B = 2.0 mAdc)	$V_{CE(sat)}$	—	1.5	Vdc
Base–Emitter Saturation Voltage (I_C = 1.0 Adc, I_B = 2.0 mAdc)	$V_{BE(sat)}$	—	2.0	Vdc
Base–Emitter On Voltage (I_C = 1.0 Adc, V_{CE} = 5.0 Vdc)	$V_{BE(on)}$	—	2.0	Vdc
SMALL–SIGNAL CHARACTERISTICS				
Current–Gain – Bandwidth Product (I_C = 200 mAdc, V_{CE} = 5.0 Vdc, f = 100 MHz)	f_T	100	—	MHz
Collector–Base Capacitance (V_{CB} = 10 Vdc, I_E = 0, f = 1.0 MHz)	C_{cb}	—	6.0	pF

1. Pulse Test: Pulse Width ≤ 300 μs; Duty Cycle ≤ 2.0%.

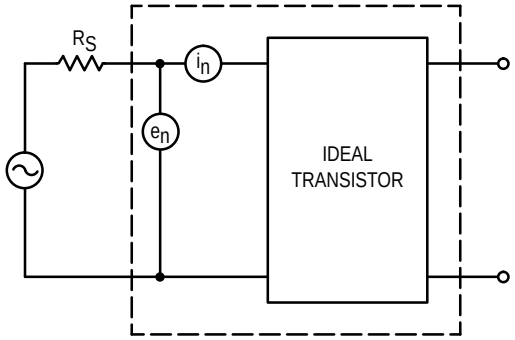

Figure 1. Transistor Noise Model

NOISE CHARACTERISTICS

(V_{CE} = 5.0 Vdc, T_A = 25°C)

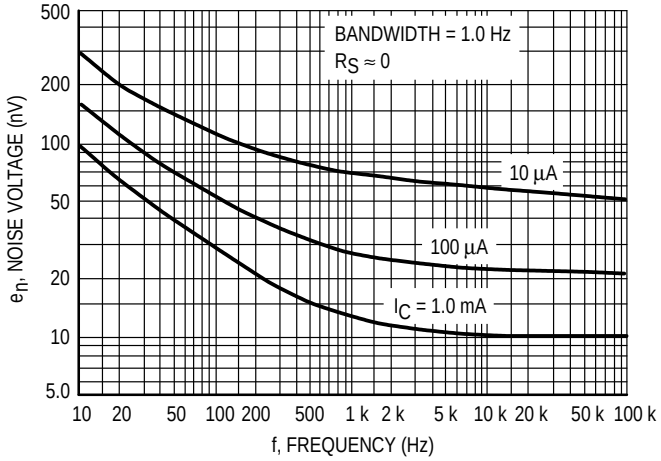

Figure 2. Noise Voltage

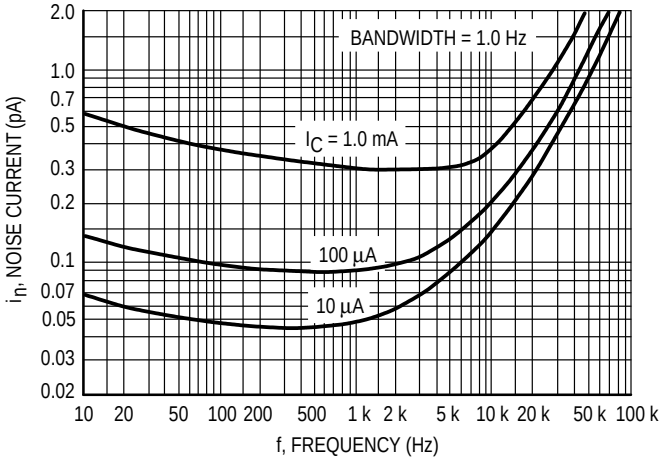

Figure 3. Noise Current

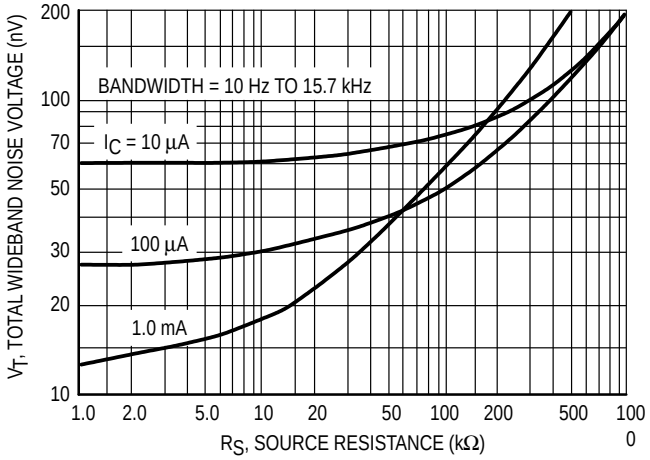

Figure 4. Total Wideband Noise Voltage

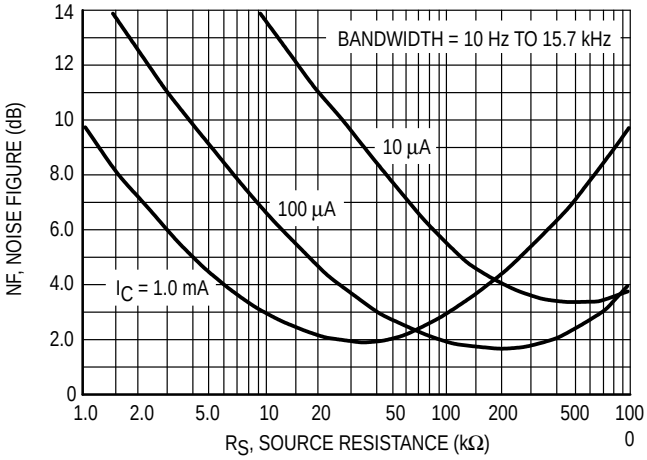

Figure 5. Wideband Noise Figure

SMALL–SIGNAL CHARACTERISTICS

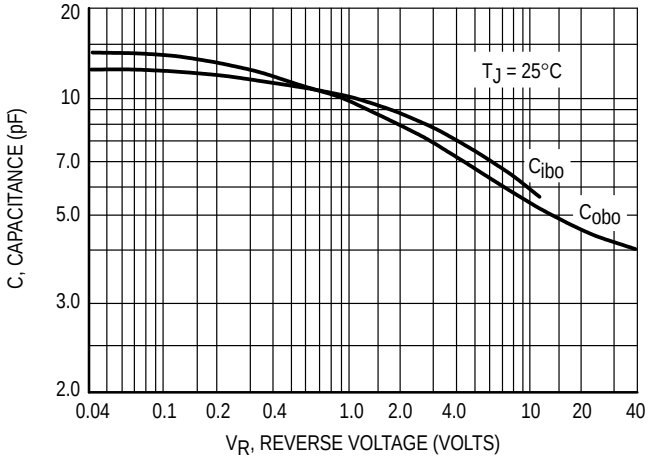

Figure 6. Capacitance

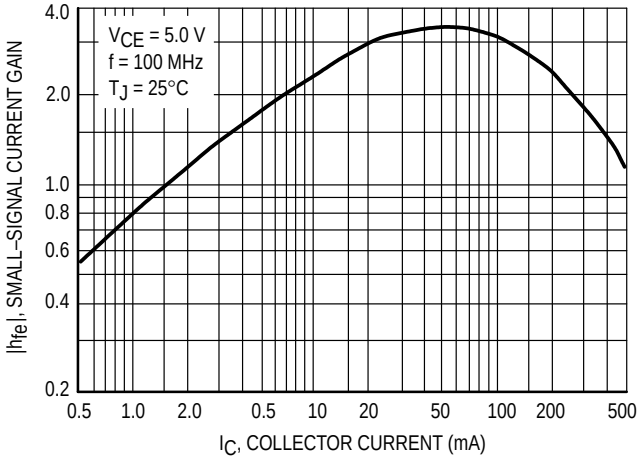

Figure 7. High Frequency Current Gain

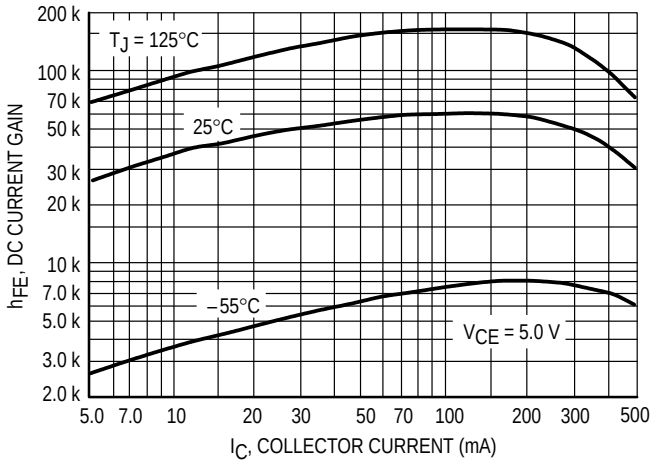

Figure 8. DC Current Gain

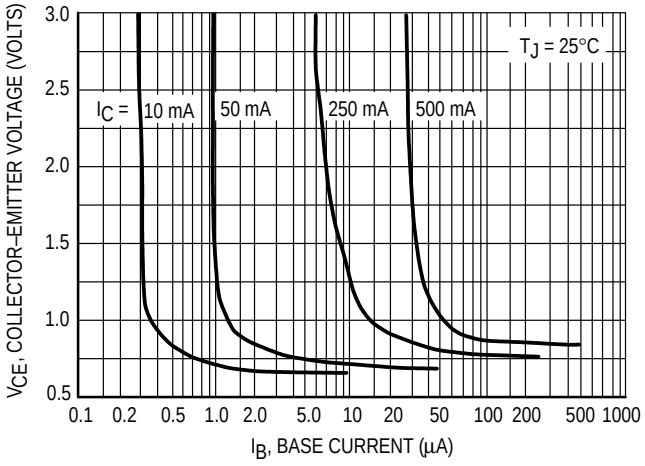

Figure 9. Collector Saturation Region

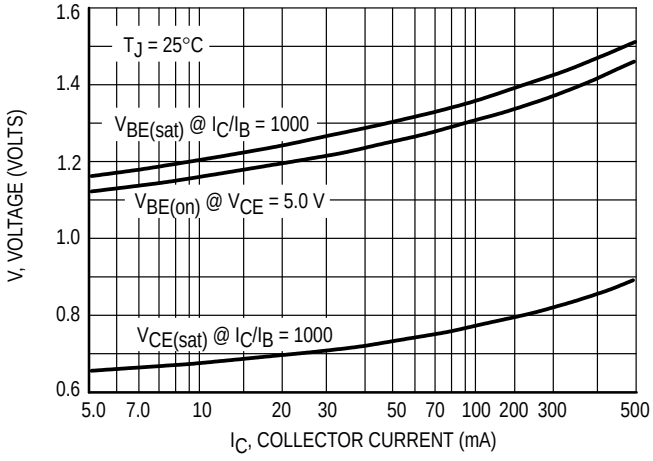

Figure 10. “On” Voltages

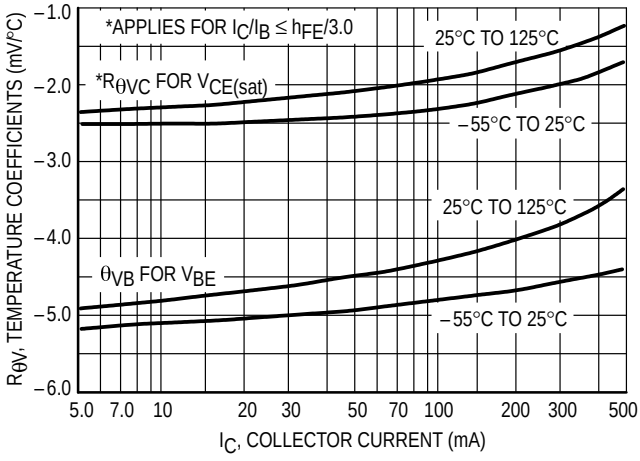

Figure 11. Temperature Coefficients

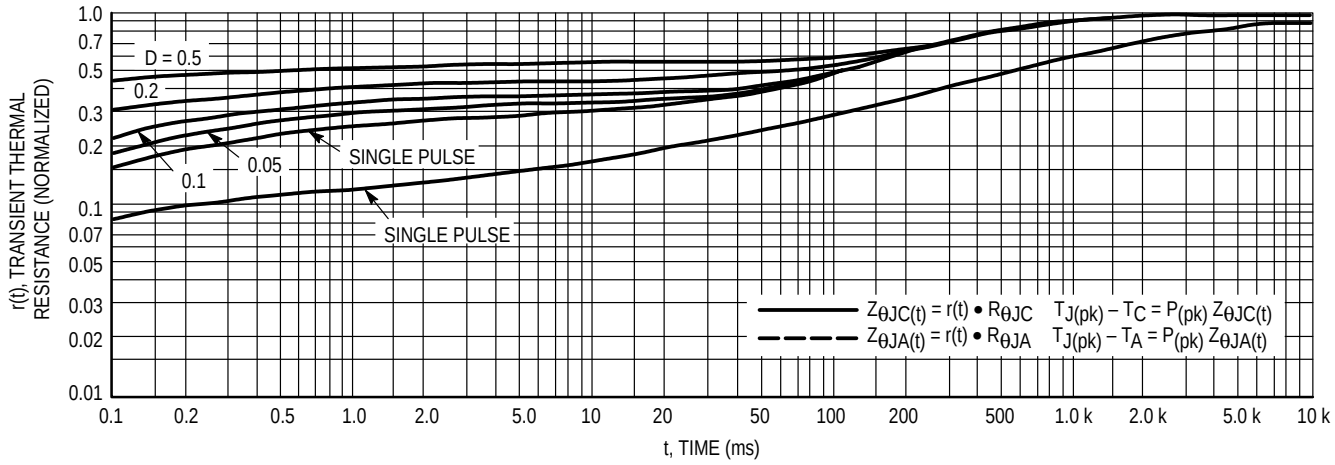

Figure 12. Thermal Response

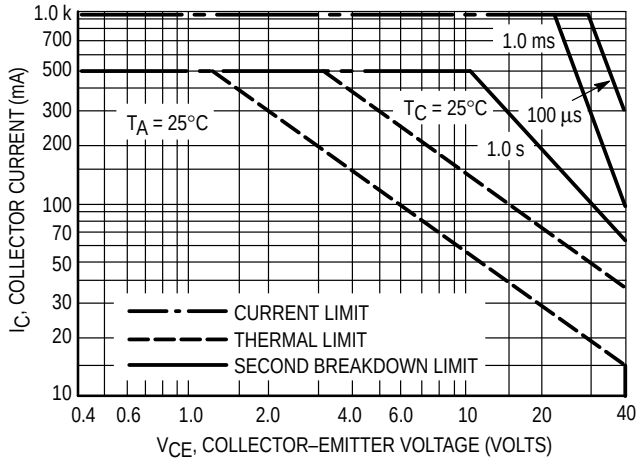

Figure 13. Active Region Safe Operating Area

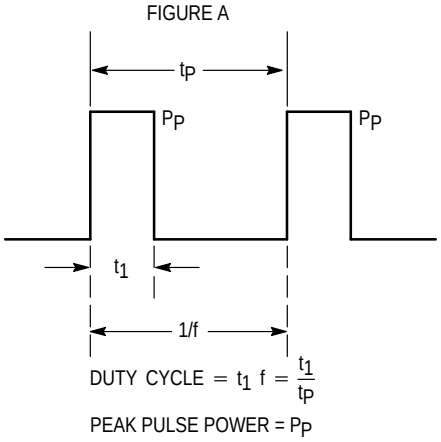

Design Note: Use of Transient Thermal Resistance Data

PACKAGE DIMENSIONS

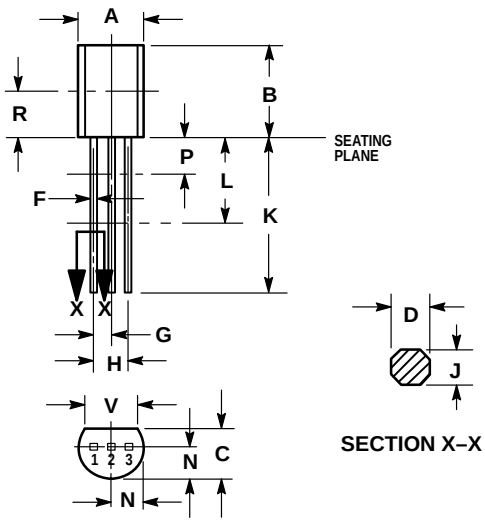

NOTES:
1. DIMENSIONING AND TOLERANCING PER ANSI Y14.5M, 1982.
2. CONTROLLING DIMENSION: INCH.
3. CONTOUR OF PACKAGE BEYOND DIMENSION R IS UNCONTROLLED.
4. DIMENSION F APPLIES BETWEEN P AND L. DIMENSIONS D AND J APPLY BETWEEN L AND K MIMIMUM. LEAD DIMENSION IS UNCONTROLLED IN P AND BEYOND DIMENSION K MINIMUM.

	INCHES		MILLIMETERS	
DIM	MIN	MAX	MIN	MAX
A	0.175	0.205	4.44	5.21
B	0.290	0.310	7.37	7.87
C	0.125	0.165	3.18	4.19
D	0.018	0.022	0.46	0.56
F	0.016	0.019	0.41	0.48
G	0.045	0.055	1.15	1.39
H	0.095	0.105	2.42	2.66
J	0.018	0.024	0.46	0.61
K	0.500	—	12.70	—
L	0.250	—	6.35	—
N	0.080	0.105	2.04	2.66
P	—	0.100	—	2.54
R	0.135	—	3.43	—
V	0.135	—	3.43	—

CASE 029–05
(TO–226AE)
ISSUE AD

STYLE 1:
PIN 1. EMITTER
2. BASE
3. COLLECTOR

Motorola reserves the right to make changes without further notice to any products herein. Motorola makes no warranty, representation or guarantee regarding the suitability of its products for any particular purpose, nor does Motorola assume any liability arising out of the application or use of any product or circuit, and specifically disclaims any and all liability, including without limitation consequential or incidental damages. “Typical” parameters which may be provided in Motorola data sheets and/or specifications can and do vary in different applications and actual performance may vary over time. All operating parameters, including “Typicals” must be validated for each customer application by customer’s technical experts. Motorola does not convey any license under its patent rights nor the rights of others. Motorola products are not designed, intended, or authorized for use as components in systems intended for surgical implant into the body, or other applications intended to support or sustain life, or for any other application in which the failure of the Motorola product could create a situation where personal injury or death may occur. Should Buyer purchase or use Motorola products for any such unintended or unauthorized application, Buyer shall indemnify and hold Motorola and its officers, employees, subsidiaries, affiliates, and distributors harmless against all claims, costs, damages, and expenses, and reasonable attorney fees arising out of, directly or indirectly, any claim of personal injury or death associated with such unintended or unauthorized use, even if such claim alleges that Motorola was negligent regarding the design or manufacture of the part. Motorola and Ⓜ are registered trademarks of Motorola, Inc. Motorola, Inc. is an Equal Opportunity/Affirmative Action Employer.

How to reach us:
USA / EUROPE / Locations Not Listed: Motorola Literature Distribution; P.O. Box 20912; Phoenix, Arizona 85036. 1–800–441–2447 or 602–303–5454

MFAX: RMFAX0@email.sps.mot.com – TOUCHTONE 602–244–6609
INTERNET: http://Design–NET.com

JAPAN: Nippon Motorola Ltd.; Tatsumi–SPD–JLDC, 6F Seibu–Butsuryu–Center, 3–14–2 Tatsumi Koto–Ku, Tokyo 135, Japan. 03–81–3521–8315

ASIA / PACIFIC: Motorola Semiconductors H.K. Ltd.; 8B Tai Ping Industrial Park, 51 Ting Kok Road, Tai Po, N.T., Hong Kong. 852–26629298