POWER MATE TECHNOLOGY CO., LTD.

MPP10(W) SERIES

DC-DC CONVERTER
2:1 & 4:1 WIDE INPUT RANGE
UP TO 10.05 WATTS



FEATURES

- REINFORCED INSULATION FOR 250VAC WORKING VOLTAGE
- CLEARANCE AND CREEPAGE DISTANCE :8.0mm/2MOPP
- 5000VAC INPUT TO OUTPUT 2MOPP ISOLATION
- BUILT-IN EMI CLASS A FILTER
- 2μA PATIENT LEAKAGE CURRENT
- SAFETY MEETS ANSI/AAMI ES60601-1, EN60601-1 AND IEC60601-1
- CE MARK MEETS 2006/95/EC, 2011/95/EC AND 2004/108/EC
- COMPLIANT TO RoHS EU DIRECTIVE 2011/65/EU

APPLICATIONS

MEDICAL EQUIPMENT
TELECOM/DATACOM
INDUSTRY CONTROL SYSTEM
MEASUREMENT EQUIPMENT
SEMICONDUCTOR EQUIPMENT
PV POWER SYSTEM
IGBT GATE DRIVER

5000VAC ISOLATION	UVP	OCP	SCP	OVP	LOW STANDBY POWER

TECHNICAL SPECIFICATION All specifications are typical at nominal input, full load and 25ºC otherwise noted

Model Number	Input Range VDC	Output Voltage VDC	Output Current @ Full Load mA	Input Current @ No Load mA	Efficiency %	Maximum Capacitor Load μF
MPP10-05S3P3A/B	4.5 ~9	3.3	2500	10	80	3000
MPP10-05S05A/B	4.5 ~9	5	2000	10	84	2500
MPP10-05S12A/B	4.5 ~9	12	830	15	86.5	430
MPP10-05S15A/B	4.5 ~9	15	670	15	87	350
MPP10-05S24A/B	4.5 ~9	24	416	20	85.5	125
MPP10-05D05A/B	4.5 ~9	±5	±1000	25	83	± 1440
MPP10-05D12A/B	4.5 ~9	±12	±416	25	85.5	± 250
MPP10-05D15A/B	4.5 ~9	±15	±333	25	86.5	± 180
MPP10-12S3P3A/B	9 ~ 18	3.3	2500	10	83	3000
MPP10-12S05A/B	9 ~ 18	5	2000	10	85.5	2500
MPP10-12S12A/B	9 ~ 18	12	830	10	88	430
MPP10-12S15A/B	9 ~ 18	15	670	10	89	350
MPP10-12S24A/B	9 ~ 18	24	416	10	89	125
MPP10-12D05A/B	9 ~ 18	±5	±1000	10	84	± 1440
MPP10-12D12A/B	9 ~ 18	±12	±416	10	89	± 250
MPP10-12D15A/B	9 ~ 18	±15	±333	10	88	± 180
MPP10-24S3P3A/B	18 ~ 36	3.3	2500	6	83	3000
MPP10-24S05A/B	18 ~ 36	5	2000	6	86.5	2500
MPP10-24S12A/B	18 ~ 36	12	830	6	89	430
MPP10-24S15A/B	18 ~ 36	15	670	6	89	350
MPP10-24S24A/B	18 ~ 36	24	416	6	89	125
MPP10-24D05A/B	18 ~ 36	±5	±1000	6	85	± 1440
MPP10-24D12A/B	18 ~ 36	±12	±416	6	89	± 250
MPP10-24D15A/B	18 ~ 36	±15	±333	6	88	± 180
MPP10-48S3P3A/B	36 ~ 75	3.3	2500	4	82.5	3000
MPP10-48S05A/B	36 ~ 75	5	2000	4	86.5	2500
MPP10-48S12A/B	36 ~ 75	12	830	4	89	430
MPP10-48S15A/B	36 ~ 75	15	670	4	89	350
MPP10-48S24A/B	36 ~ 75	24	416	4	88.5	125
MPP10-48D05A/B	36 ~ 75	±5	±1000	4	85	± 1440
MPP10-48D12A/B	36 ~ 75	±12	±416	4	88	± 250
MPP10-48D15A/B	36 ~ 75	±15	±333	4	88	± 180

Model Number	Input Range VDC	Output Voltage VDC	Output Current @ Full Load mA	Input Current @ No Load mA	Efficiency %	Maximum Capacitor Load µF
MPP10-24S3P3WA/B	9 ~ 36	3.3	2500	6	83	3000
MPP10-24S05WA/B	9 ~ 36	5	2000	6	86.5	2500
MPP10-24S12WA/B	9 ~ 36	12	830	6	89	430
MPP10-24S15WA/B	9 ~ 36	15	670	6	89	350
MPP10-24S24WA/B	9 ~ 36	24	416	6	89	125
MPP10-24D05WA/B	9 ~ 36	±5	±1000	6	85	± 1440
MPP10-24D12WA/B	9 ~ 36	±12	±416	6	89	± 250
MPP10-24D15WA/B	9 ~ 36	±15	±333	6	88	± 180
MPP10-48S3P3WA/B	18 ~ 75	3.3	2500	4	82.5	3000
MPP10-48S05WA/B	18 ~ 75	5	2000	4	86.5	2500
MPP10-48S12WA/B	18 ~ 75	12	830	4	89	430
MPP10-48S15WA/B	18 ~ 75	15	670	4	89	350
MPP10-48S24WA/B	18 ~ 75	24	416	4	88.5	125
MPP10-48D05WA/B	18 ~ 75	±5	±1000	4	85	± 1440
MPP10-48D12WA/B	18 ~ 75	±12	±416	4	88	± 250
MPP10-48D15WA/B	18 ~ 75	±15	±333	4	88	± 180

PART NUMBER STRUCTURE

MPP10 - 48 S 05 W A - P T

Series Name

Input Voltage (VDC)	Output Quantity	Output Voltage (VDC)	Input Range	Pin Connection Option	Remote On/Off Option	Trim Option
05: 4.5~9 **12:** 9~18 **24:** 18~36 **48:** 36~75	**S:** Single	**3P3:** 3.3 **05:** 5 **12:** 12 **15:** 15 **24:** 24	□: 2:1 **W:** 4:1	**A:** A type(Standard) **B:** B type	□: No On/Off control **P:** Remote On/Off (Only for B type Pin connection)	□: No Trim **T:** Trim (Only for B type Pin connection)
W: **24:** 9~36 **48:** 18~75	**D:** Dual	**05:** ±5 **12:** ±12 **15:** ±15				

INPUT SPECIFICATIONS

Parameter	Conditions			Min.	Typ.	Max.	Unit
Operating input voltage range		2:1	5Vin(nom)	4.5	5	9	VDC
			12Vin(nom)	9	12	18	
			24Vin(nom)	18	24	36	
			48Vin(nom)	36	48	75	
		(W) 4:1	24Vin(nom)	9	24	36	VDC
			48Vin(nom)	18	48	75	
Start-up voltage		2:1	5Vin(nom)			4.5	VDC
			12Vin(nom)			9	
			24Vin(nom)			18	
			48Vin(nom)			36	
		(W) 4:1	24Vin(nom)			9	VDC
			48Vin(nom)			18	
Shutdown voltage		2:1	5Vin(nom)		4		VDC
			12Vin(nom)		8		
			24Vin(nom)		16		
			48Vin(nom)		33		
		(W) 4:1	24Vin(nom)		8		VDC
			48Vin(nom)		16		
Start up time	Constant resistive load		Power up		30		ms
			Remote ON/OFF		30		
Input surge voltage	3 second, max.	2:1	5Vin(nom)			16	VDC
			12Vin(nom)			25	
			24Vin(nom)			50	
			48Vin(nom)			100	
	3 second, max.	(W) 4:1	24Vin(nom)			50	VDC
			48Vin(nom)			100	
Input filter					Pi type		
Remote ON/OFF (Only for B-type Pin connection option)	Referenced to - INPUT pin		DC-DC ON		OPEN or 0 ~ 1.2VDC		
			DC-DC OFF		2.2 ~ 12VDC		
			Input current of CTRL pin	-0.5		1	mA
			Remote off input current		2.5		mA

OUTPUT SPECIFICATIONS

Parameter	Conditions		Min.	Typ.	Max.	Unit
Voltage accuracy			-1.0		+1.0	%
Line regulation	Low Line to High Line at Full Load	Single Dual	-0.2 -0.5		+0.2 +0.5	%
Load regulation	No Load to Full Load	Single Dual	-0.2 -1.0		+0.2 +1.0	%
Cross regulation	Asymmetrical load 25%/100% FL	Dual	-5.0		+5.0	%
Voltage adjustability (Only for B-type Pin connection option)	Single output	3.3Vout, 5Vout, 12Vout 15Vout, 24Vout	-10 -10		+10 +20	%
	Dual output	±5Vout, ±12Vout, ±15Vout	-10		+10	%
Ripple and noise	Measured by 20MHz bandwidth With a 10μF/25V X7R MLCC With a 4.7μF/50V X7R MLCC	 3.3Vout, 5Vout 12Vout, 15Vout 24Vout		 30 40 50		mVp-p
Temperature coefficient			-0.02		+0.02	%/ºC
Transient response recovery time	25% load step change			250		μs
Over voltage protection	Continuous clamp	3.3Vout 5Vout 12Vout 15Vout 24Vout	3.7 5.6 13.5 18.3 29.1		5.4 7.0 19.6 22.0 32.5	VDC
Over load protection	% of Iout rated; Hiccup mode			150		%
Short circuit protection					Continuous, automatics recovery	

GENERAL SPECIFICATIONS

Parameter	Conditions		Min.	Typ.	Max.	Unit
Isolation voltage	1 minute	Input to Output	5000			VAC
Isolation capacitance				12	17	pF
Leakage current	240VAC,60Hz				2	μA
Switching frequency			270	300	330	kHz
Clearance/Creepage			8			mm
Design meet safety standard						ANSI/AAMI ES60601-1 IEC60601-1, EN60601-1
Case material						Non-conductive black plastic
Base material						Non-conductive black plastic
Potting material						Silicon (UL94-V0)
Dimensions						1.25 X 0.80 X 0.40 Inch (31.8×20.3×10.2 mm)
Weight						14g (0.48oz)
MTBF	MIL-HDBK-217F Ta=25ºC, Full load (G/B, controlled environment)					8.638 x 10^5 hrs

ENVIRONMENTAL SPECIFICATIONS

Parameter	Conditions	Min.	Typ.	Max.	Unit
Operating ambient temperature	Without derating	-40		+77	ºC
	With derating	+77		+105	ºC
Storage temperature range		-55		+125	ºC
Thermal impedance	Natural convection (20LFM)		18		ºC/W
Thermal shock					MIL-STD-810F
Vibration					MIL-STD-810F
Relative humidity					5% to 95% RH

EMC SPECIFICATIONS

Parameter	Conditions		Level
EMI (1)	EN55011,EN55022 and FCC Part 18		Class A, Class B
ESD	EN61000-4-2	Air ± 8kV Contact ± 6kV	Perf. Criteria A
Radiated immunity	EN61000-4-3	10 V/m	Perf. Criteria A
Fast transient (2)	EN61000-4-4	± 2kV	Perf. Criteria A
Surge (2)	EN61000-4-5	± 2kV	Perf. Criteria A
Conducted immunity	EN61000-4-6	10 Vr.m.s	Perf. Criteria A

Note:

1. The MPP10(W) series can meet EMI Class A with no external filter. And Class B only with external components. For more detail information, please contact with P-DUKE.
2. An external input filter capacitor is required if the module has to meet EN61000-4-4, EN61000-4-5.
   The MPP10-05S□□□□ recommended an aluminum electrolytic capacitor (Nippon Chemi-con KY series, 1000μF/25V).
   And a reverse diode (Vishay V10P45) to connect in parallel.
   The MPP10-12&24S□□□□□ recommended an aluminum electrolytic capacitor (Nippon Chemi-con KY series, 470μF/50V).
   The MPP10-48S□□□□□ recommended an aluminum electrolytic capacitor (Nippon Chemi-con KY series, 330μF/100V).

CAUTION: This power module is not internally fused. An input line fuse must always be used.

CHARACTERISTIC CURVE

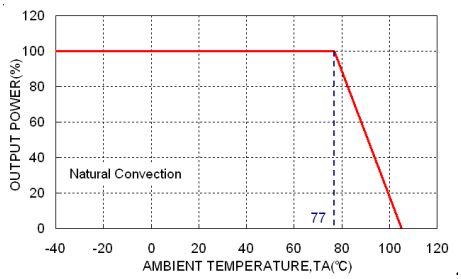

MPP10-48S05WA Derating Curve

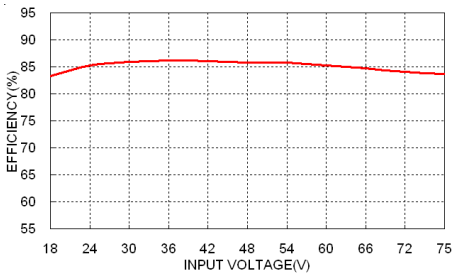

MPP10-48S05WA Efficiency VS Input Voltage

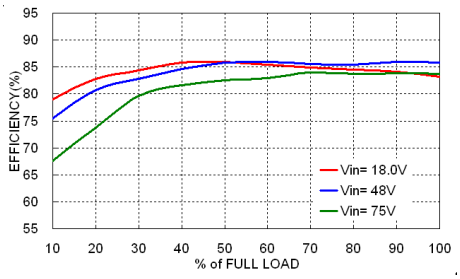

MPP10-48S05WA Efficiency VS Output Load

MECHANICAL DRAWING

A type Pin connection (Standard)

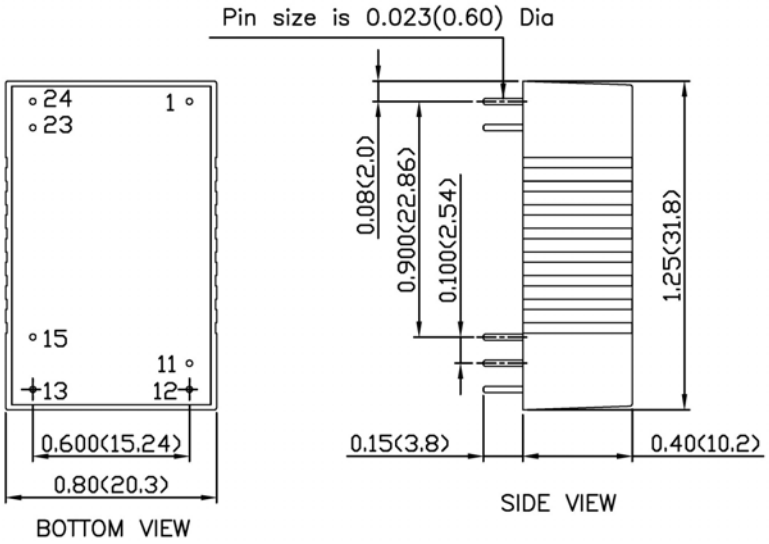

DIP PIN CONNECTION		
PIN	SINGLE	DUAL
1	+ INPUT	+ INPUT
11	NO PIN	COMMON
12	-OUTPUT	NO PIN
13	+OUTPUT	-OUTPUT
15	NO PIN	+OUTPUT
23	- INPUT	- INPUT
24	- INPUT	- INPUT

1. All dimensions in Inch (mm)
   Tolerance: X.XX±0.02 (X.X±0.5)
   X.XXX±0.01 (X.XX±0.25)
2. Pin pitch tolerance ±0.01 (0.25)
3. Pin dimension tolerance ±0.004 (0.1)

B type Pin connection

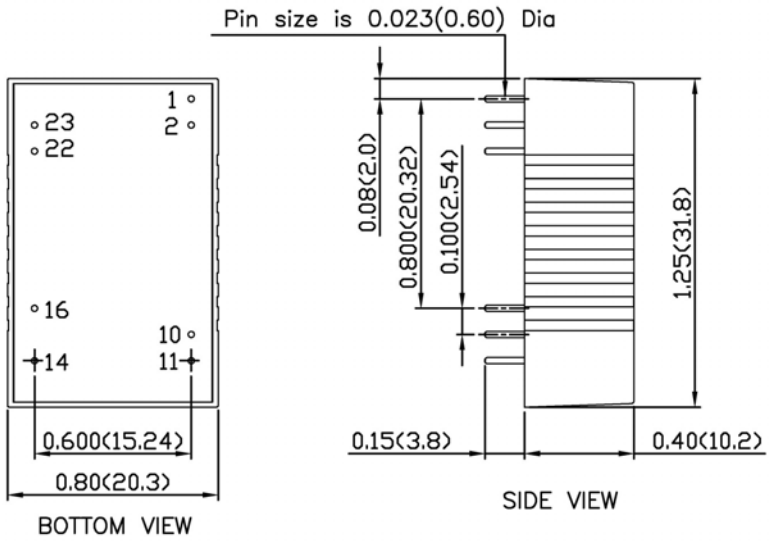

DIP PIN CONNECTION		
PIN	SINGLE	DUAL
1	CTRL (Option)	CTRL (Option)
2	- INPUT	- INPUT
10	TRIM (Option)	TRIM (Option)
11	NO PIN / NC (＊＊)	-OUTPUT
14	+OUTPUT	+OUTPUT
16	-OUTPUT	COMMON
22	+INPUT	+INPUT
23	+INPUT	+INPUT

＊＊ : The Pin 11 is ”NO PIN” when single output with Trim option (Suffix: -T).
The Pin 11 is ”NC” when single output without TRIM pin.

1. All dimensions in Inch (mm)
   Tolerance: X.XX±0.02 (X.X±0.5)
   X.XXX±0.01 (X.XX±0.25)
2. Pin pitch tolerance ±0.01 (0.25)
3. Pin dimension tolerance ±0.004 (0.1)