MPI-P10H
100W AC-DC Power Supply

Industrial Power Supply



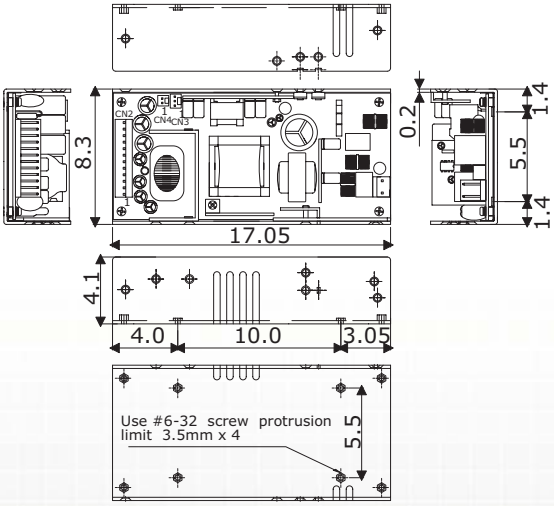

Specifications

Output Voltage	+5V	+12V	-12V	+3.3V	+5Vsb
Mini. Output Current	1A	0.1A	0A	0A	0A
Rated Output Current	5.5A	2.5A	0.5A	4A	0.75A
Max. Output Current (Note 1)	8A	5A	----	6A	----
Line Regulation	1%	1%	1%	1%	1%
Load Regulation	2%	4%	5%	4%	4%
Ripple & Noise p-p (Note 2)	50mV	120mV	120mV	50mV	120mV
Initial Setting Accuracy (Note 3)	5.08V to 5.13V	11.4V to 12.6V	-11.4V to -12.6V	3.10V to 3.50V	4.80V to 5.20V

Total Output Power

100W continuously maximum convection cooling, peak 120W with forced air (Note 4)

Note:
1) The maximum total combined output power on the +3.3V and +5V rails is 50W
2) Measured by a 20MHz bandwidth limited oscilloscope and the each output is connected with a 10uF Electrolytic Capacitor and a 0.1uF Ceramic Capacitor
3) The +5V output is set between 5.08V to 5.13V by variable resistor and all output at 60% rated load and the other outputs are checked to be within the accuracy range
4) Total maximum output power 100W at 25°C and 80W at 50°C convection cooling. Maximum 100W and peak 120W with 10.2CFM forced air-cooling

Dimensions

17.05 x 8.3 x 4.1 cm, Tolerance +/-0.4mm

MPI-806H
80W AC-DC ATX Power Supply

AC-DC



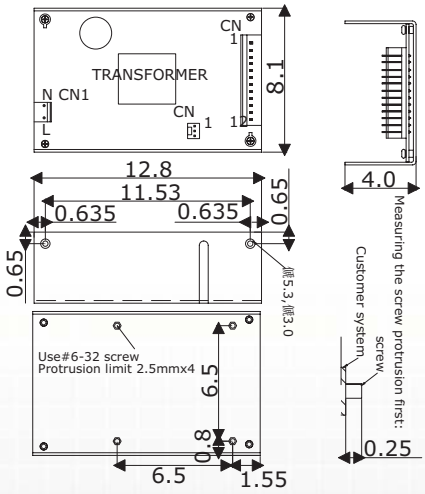

Specifications

Output Voltage	+5V	+12V	-12V	+3.3V	+5Vsb
Min. Output Current	0.5A	0A	0A	0A	0A
Rated Output Current	5A	1.5A	0.5A	4A	0.75A
Max. Output Current (Note 1)	8A	3A	----	6A	----
Line Regulation	+/-1%	+/-1%	+/-1%	+/-1%	+/-1%
Load Regulation	2%	4%	5%	4%	4%
Ripple & Noise p-p (Note 2)	50mV	120mV	120mV	50mV	120mV
Initial Setting Accuracy (Note 3)	5.08V to 5.13V	11.4V to 12.6V	-11.4V to -12.6V	3.10V to 3.50V	4.80V to 5.20V

Total Output Power

80W at 50°C environment temperature (Note 4)

Note:
1) The maximum total combined output power on the +3.3V and +5V rails is 40W
2) Measured by a 20MHz bandwidth limited oscilloscope and the each output is connected with a 10uF Electrolytic Capacitor and a 0.1uF Ceramic Capacitor
3) The +5V output is set between 5.08V to 5.13V by variable resistor and all output at 60% rated load and the other outputs are checked to be within the accuracy range
4) Total maximum load cannot exceed 80W with 8.6CFM forced air-cooling and 60W convection cooling

Dimensions

12.8 x 8.1 x 4.0 cm, Tolerance +/-0.4mm