Freescale Semiconductor
Technical Data

MPC8280EC
Rev. 1.7, 12/2006

MPC8280 PowerQUICC II™ Family Hardware Specifications

This document contains detailed information about power considerations, DC/AC electrical characteristics, and AC timing specifications for .13µm (HiP7) members of the PowerQUICC II™ family of integrated communications processors—the MPC8280, the MPC8275, and the MPC8270 (collectively called 'the MPC8280' throughout this document).

Contents

1. Overview 2
2. Operating Conditions 7
3. DC Electrical Characteristics 8
4. Thermal Characteristics 11
5. Power Dissipation 13
6. AC Electrical Characteristics 14
7. Clock Configuration Modes 24
8. Pinout 43
9. Package Description 73
10. Ordering Information 76
11. Document Revision History 76

© Freescale Semiconductor, Inc., 2004, 2006. All rights reserved.

freescale™ semiconductor

1 Overview

Table 1 shows the functionality supported by each device in the MPC8280 family.

Table 1. MPC8280 PowerQUICC II Family Functionality

Functionality	Devices			
	MPC8270		MPC8275	MPC8280
Package [1]	480 TBGA	516 PBGA	516 PBGA	480 TBGA
Serial communications controllers (SCCs)	4	4	4	4
QUICC multi-channel controller (QMC)	—	—	—	—
Fast communication controllers (FCCs)	3	3	3	3
I-Cache (Kbyte)	16	16	16	16
D-Cache (Kbyte)	16	16	16	16
Ethernet (10/100)	3	3	3	3
UTOPIA II Ports	0	0	2	2
Multi-channel controllers (MCCs)	1	1	1	2
PCI bridge	Yes	Yes	Yes	Yes
Transmission convergence (TC) layer	—	—	—	Yes
Inverse multiplexing for ATM (IMA)	—	—	—	Yes
Universal serial bus (USB) 2.0 full/low rate	1	1	1	1
Security engine (SEC)	—	—	—	—

[1] Refer to Table 2.

Devices in the MPC8280 family are available in three packages—the standard ZU package and the alternate VR or ZQ packages—as shown in Table 2. Note that throughout this document references to the MPC8280 and the MPC8270 are inclusive of VR and ZQ package devices unless otherwise specified. For more information on VR and ZQ packages, contact your Freescale sales office. For package ordering information, refer to Section 10, “Ordering Information.”

Table 2. HiP7 PowerQUICC II Device Packages

Code (Package)	ZU (480 TBGA—Leaded)	VR (516 PBGA—Lead free)	ZQ (516 PBGA—Lead spheres)
Device	MPC8280	MPC8275VR	MPC8275ZQ
	MPC8270	MPC8270VR	MPC8270ZQ

Figure 1 shows the block diagram. Shaded portions are device-specific; refer to the notes below.

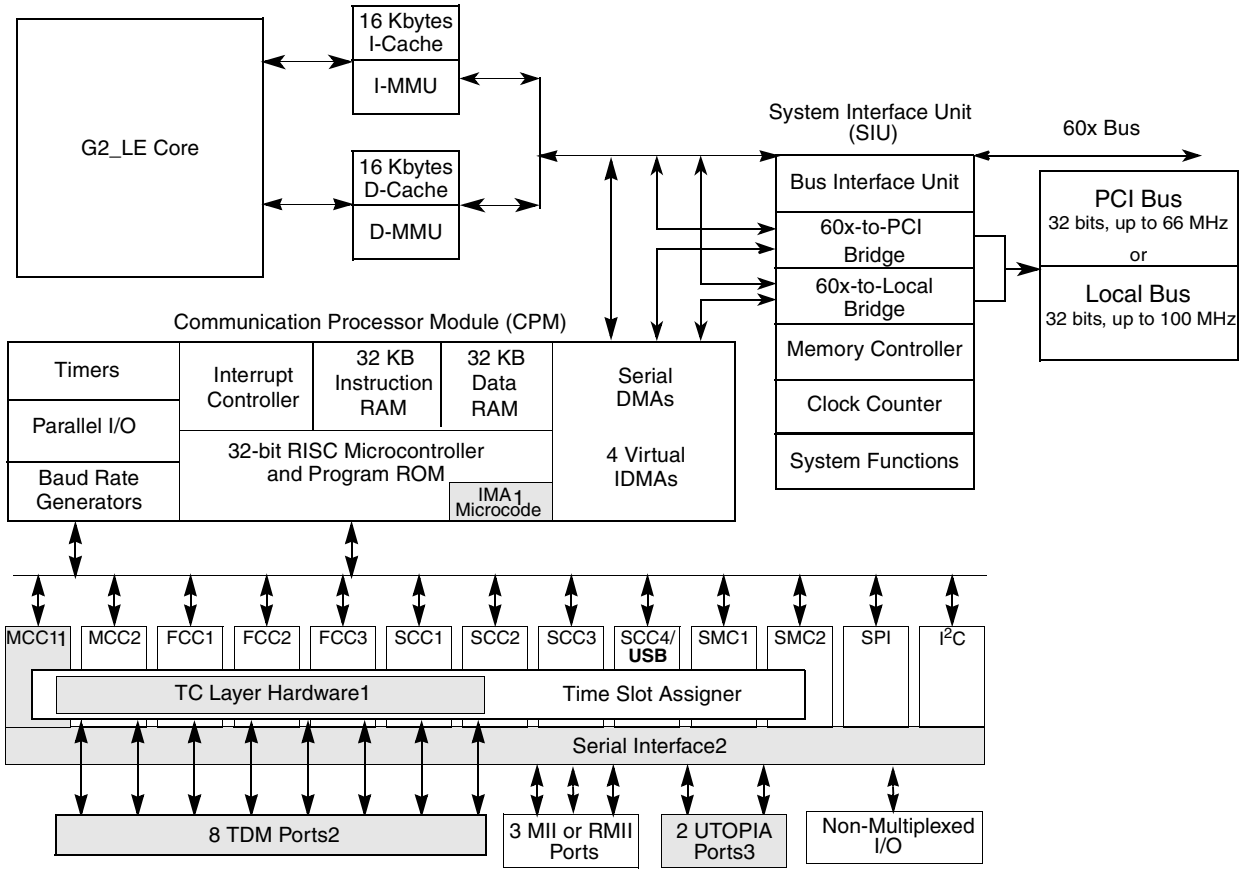

Notes:
[1] MPC8280 only (**not on MPC8270,** the VR package, nor the ZQ package)
[2] MPC8280 has 2 serial interface (SI) blocks and 8 TDM ports. MPC8270 and the VR and ZQ packages have only 1 SI block and 4 TDM ports (TDM2[A–D]).
[3] MPC8280, MPC8275VR, MPC8275ZQ only (**not on MPC8270,** MPC8270VR, nor MPC8270ZQ)

Figure 1. MPC8280 Block Diagram

1.1 Features

The major features of the MPC8280 are as follows:

- Dual-issue integer (G2_LE) core
  - A core version of the EC603e microprocessor
  - System core microprocessor supporting frequencies of 166–450 MHz
  - Separate 16-Kbyte data and instruction caches:
    - Four-way set associative
    - Physically addressed
    - LRU replacement algorithm
  - Architecture-compliant memory management unit (MMU)
  - Common on-chip processor (COP) test interface

  - High-performance (SPEC95 benchmark at 450 MHz; 855 Dhrystones MIPS at 450 MHz)
  - Supports bus snooping for data cache coherency
  - Floating-point unit (FPU)
- Separate power supply for internal logic and for I/O
- Separate PLLs for G2_LE core and for the CPM
  - G2_LE core and CPM can run at different frequencies for power/performance optimization
  - Internal core/bus clock multiplier that provides 2:1, 2.5:1, 3:1, 3.5:1, 4:1, 4.5:1, 5:1, 6:1, 7:1, 8:1 ratios
  - Internal CPM/bus clock multiplier that provides 2:1, 2.5:1, 3:1, 3.5:1, 4:1, 5:1, 6:1, 8:1 ratios
- 64-bit data and 32-bit address 60x bus
  - Bus supports multiple master designs
  - Supports single- and four-beat burst transfers
  - 64-, 32-, 16-, and 8-bit port sizes controlled by on-chip memory controller
  - Supports data parity or ECC and address parity
- 32-bit data and 18-bit address local bus
  - Single-master bus, supports external slaves
  - Eight-beat burst transfers
  - 32-, 16-, and 8-bit port sizes controlled by on-chip memory controller
- 60x-to-PCI bridge
  - Programmable host bridge and agent
  - 32-bit data bus, 66.67/83.3/100 MHz, 3.3 V
  - Synchronous and asynchronous 60x and PCI clock modes
  - All internal address space available to external PCI host
  - DMA for memory block transfers
  - PCI-to-60x address remapping
- PCI bridge
  - PCI Specification Revision 2.2 compliant and supports frequencies up to 66 MHz
  - On-chip arbitration
  - Support for PCI-to-60x-memory and 60x-memory-to-PCI streaming
  - PCI host bridge or peripheral capabilities
  - Includes 4 DMA channels for the following transfers:
    - PCI-to-60x to 60x-to-PCI
    - 60x-to-PCI to PCI-to-60x
    - PCI-to-60x to PCI-to-60x
    - 60x-to-PCI to 60x-to-PCI
  - Includes all of the configuration registers (which are automatically loaded from the EPROM and used to configure the MPC8280) required by the PCI standard as well as message and doorbell registers
  - Supports the I_2O standard
  - Hot-swap friendly (supports the hot swap specification as defined by PICMG 2.1 R1.0 August 3, 1998)
  - Support for 66.67/83.33/100 MHz, 3.3 V specification
  - 60x-PCI bus core logic that uses a buffer pool to allocate buffers for each port

  - Uses the local bus signals, removing need for additional pins
- System interface unit (SIU)
  - Clock synthesizer
  - Reset controller
  - Real-time clock (RTC) register
  - Periodic interrupt timer
  - Hardware bus monitor and software watchdog timer
  - IEEE 1149.1 JTAG test access port
- 12-bank memory controller
  - Glueless interface to SRAM, page mode SDRAM, DRAM, EPROM, Flash and other user- definable peripherals
  - Byte write enables and selectable parity generation
  - 32-bit address decodes with programmable bank size
  - Three user-programmable machines, general-purpose chip-select machine, and page-mode pipeline SDRAM machine
  - Byte selects for 64-bus width (60x) and byte selects for 32-bus width (local)
  - Dedicated interface logic for SDRAM
- CPU core can be disabled and the device can be used in slave mode to an external core
- Communications processor module (CPM)
  - Embedded 32-bit communications processor (CP) uses a RISC architecture for flexible support for communications protocols
  - Interfaces to G2_LE core through an on-chip 32-Kbyte dual-port data RAM, an on-chip 32-Kbyte dual-port instruction RAM and DMA controller
  - Serial DMA channels for receive and transmit on all serial channels
  - Parallel I/O registers with open-drain and interrupt capability
  - Virtual DMA functionality executing memory-to-memory and memory-to-I/O transfers
  - Three fast communications controllers supporting the following protocols:
    - 10/100-Mbit Ethernet/IEEE 802.3 CDMA/CS interface through media independent interface (MII) or reduced media independent interface (RMII)
    - ATM—Full-duplex SAR protocols at 155 Mbps, through UTOPIA interface, AAL5, AAL1, AAL0 protocols, TM 4.0 CBR, VBR, UBR, ABR traffic types, up to 64 K external connections (no ATM support for the MPC8270)
    - Transparent
    - HDLC—Up to T3 rates (clear channel)
    - FCC2 can also be connected to the TC layer (MPC8280 only)
  - Two multichannel controllers (MCCs) (one MCC on the MPC8270)
    - Each MCC handles 128 serial, full-duplex, 64-Kbps data channels. Each MCC can be split into four subgroups of 32 channels each.
    - Almost any combination of subgroups can be multiplexed to single or multiple TDM interfaces up to four TDM interfaces per MCC

- Four serial communications controllers (SCCs) identical to those on the MPC860, supporting the digital portions of the following protocols:
  - Ethernet/IEEE 802.3 CDMA/CS
  - HDLC/SDLC and HDLC bus
  - Universal asynchronous receiver transmitter (UART)
  - Synchronous UART
  - Binary synchronous (BISYNC) communications
  - Transparent
- Universal serial bus (USB) controller
  - Supports USB 2.0 full/low rate compatible
  - USB host mode
  - Supports control, bulk, interrupt, and isochronous data transfers
  - CRC16 generation and checking
  - NRZI encoding/decoding with bit stuffing
  - Supports both 12- and 1.5-Mbps data rates (automatic generation of preamble token and data rate configuration). Note that low-speed operation requires an external hub.
  - Flexible data buffers with multiple buffers per frame
  - Supports local loopback mode for diagnostics (12 Mbps only)
  - Supports USB slave mode
  - Four independent endpoints support control, bulk, interrupt, and isochronous data transfers
  - CRC16 generation and checking
  - CRC5 checking
  - NRZI encoding/decoding with bit stuffing
  - 12- or 1.5-Mbps data rate
  - Flexible data buffers with multiple buffers per frame
  - Automatic retransmission upon transmit error
- Two serial management controllers (SMCs), identical to those of the MPC860
  - Provide management for BRI devices as general circuit interface (GCI) controllers in time-division-multiplexed (TDM) channels
  - Transparent
  - UART (low-speed operation)
- One serial peripheral interface identical to the MPC860 SPI
- One inter-integrated circuit (I^2C) controller (identical to the MPC860 I^2C controller)
  - Microwire compatible
  - Multiple-master, single-master, and slave modes
- Up to eight TDM interfaces (four on the MPC8270)
  - Supports two groups of four TDM channels for a total of eight TDMs (one group of four on the MPC8270 and the MPC8275)
  - 2,048 bytes of SI RAM
  - Bit or byte resolution
  - Independent transmit and receive routing, frame synchronization

  - Supports T1, CEPT, T1/E1, T3/E3, pulse code modulation highway, ISDN basic rate, ISDN primary rate, Freescale interchip digital link (IDL), general circuit interface (GCI), and user-defined TDM serial interfaces
  - Eight independent baud rate generators and 20 input clock pins for supplying clocks to FCCs, SCCs, SMCs, and serial channels
  - Four independent 16-bit timers that can be interconnected as two 32-bit timers
- Inverse multiplexing for ATM capabilities (IMA) (MPC8280 only).Supported by eight transfer transmission convergence (TC) layers between the TDMs and FCC2.
- Transmission convergence (TC) layer (MPC8280 only)

2 Operating Conditions

Table 3 shows the maximum electrical ratings.

Table 3. Absolute Maximum Ratings [1]

Rating	Symbol	Value	Unit
Core supply voltage [2]	VDD	-0.3 – 2.25	V
PLL supply voltage[2]	VCCSYN	-0.3 – 2.25	V
I/O supply voltage [3]	VDDH	-0.3 – 4.0	V
Input voltage [4]	VIN	GND(-0.3) – 3.6	V
Junction temperature	T_j	120	°C
Storage temperature range	T_{STG}	(-55) – (+150)	°C

1 Absolute maximum ratings are stress ratings only; functional operation (see Table 4) at the maximums is not guaranteed. Stress beyond those listed may affect device reliability or cause permanent damage.

2 **Caution:** VDD/VCCSYN must not exceed VDDH by more than 0.4 V during normal operation. It is recommended that VDD/VCCSYN should be raised before or simultaneous with VDDH during power-on reset. VDD/VCCSYN may exceed VDDH by more than 0.4 V during power-on reset for no more than 100 ms.

3 **Caution:** VDDH can exceed VDD/VCCSYN by 3.3 V during power on reset by no more than 100 mSec. VDDH should not exceed VDD/VCCSYN by more than 2.5 V during normal operation.

4 **Caution:** VIN must not exceed VDDH by more than 2.5 V at any time, including during power-on reset.

Table 4 lists recommended operational voltage conditions.

Table 4. Recommended Operating Conditions [1]

Rating	Symbol	Value	Unit
Core supply voltage	VDD	1.45 – 1.60	V
PLL supply voltage	VCCSYN	1.45 – 1.60	V
I/O supply voltage	VDDH	3.135 – 3.465	V
Input voltage	VIN	GND (-0.3) – 3.465	V
Junction temperature (maximum)	T_j	105 [2]	°C
Ambient temperature	T_A	0–70[2]	°C

1 **Caution:** These are the recommended and tested operating conditions. Proper operation outside of these conditions is not guaranteed.

2 Note that for extended temperature parts the range is $(-40)_{T_A}$ – 105_{T_j}.

This device contains circuitry protecting against damage due to high static voltage or electrical fields; however, it is advised that normal precautions be taken to avoid application of any voltages higher than maximum-rated voltages to this high-impedance circuit. Reliability of operation is enhanced if unused inputs are tied to an appropriate logic voltage level (either GND or V_{CC}).

Figure 2 shows the undershoot and overshoot voltage of the 60x and local bus memory interface of the MPC8280. Note that in PCI mode the I/O interface is different.

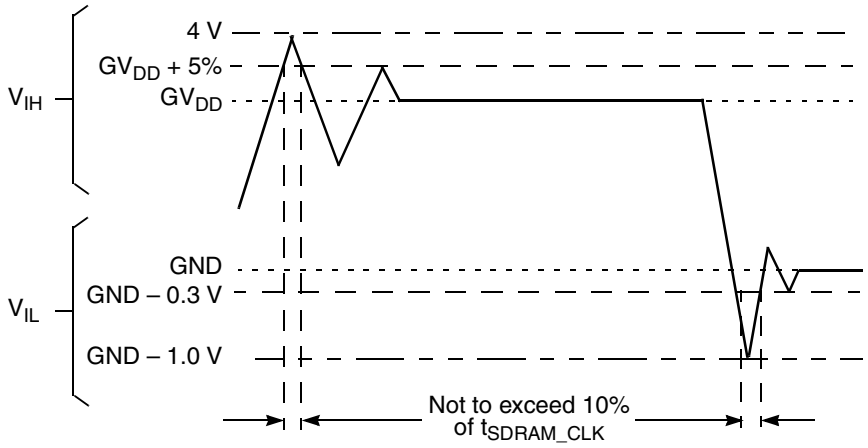

Figure 2. Overshoot/Undershoot Voltage

3 DC Electrical Characteristics

Table 5 shows DC electrical characteristics.

Table 5. DC Electrical Characteristics [1]

Characteristic	Symbol	Min	Max	Unit
Input high voltage— all inputs except TCK, $\overline{\text{TRST}}$ and $\overline{\text{PORESET}}$ [2]	V_{IH}	2.0	3.465	V
Input low voltage	V_{IL}	GND	0.8	V
CLKIN input high voltage	V_{IHC}	2.4	3.465	V
CLKIN input low voltage	V_{ILC}	GND	0.4	V
Input leakage current, V_{IN} = VDDH [3]	I_{IN}	—	10	μA
Hi-Z (off state) leakage current, V_{IN} = VDDH[3]	I_{OZ}	—	10	μA
Signal low input current, V_{IL} = 0.8 V [4]	I_L	—	1	μA
Signal high input current, V_{IH} = 2.0 V	I_H	—	1	μA
Output high voltage, I_{OH} = –2 mA except UTOPIA mode, and open drain pins In UTOPIA mode [5] (UTOPIA pins only): I_{OH} = -8.0mA PA[0-31] PB[4-31] PC[0-31] PD[4-31]	V_{OH}	2.4	—	V

Table 5. DC Electrical Characteristics [1] (continued)

Characteristic	Symbol	Min	Max	Unit
In UTOPIA mode[5] (UTOPIA pins only): I_{OL} = 8.0mA PA[0-31] PB[4-31] PC[0-31] PD[4-31]	V_{OL}	—	0.5	V
I_{OL} = 6.0mA BR BG ABB/IRQ2 TS A[0-31] TT[0-4] TBST TSIZE[0–3] AACK ARTRY DBG DBB/IRQ3 D[0-63] DP(0)/RSRV/EXT_BR2 DP(1)/IRQ1/EXT_BG2 DP(2)/TLBISYNC/IRQ2/EXT_DBG2 DP(3)/IRQ3/EXT_BR3/CKSTP_OUT DP(4)/IRQ4/EXT_BG3/CORE_SREST DP(5)/TBEN/EXT_DBG3/IRQ5/CINT DP(6)/CSE(0)/IRQ6 DP(7)/CSE(1)/IRQ7 PSDVAL TA TEA GBL/IRQ1 CI/BADDR29/IRQ2 WT/BADDR30/IRQ3 L2_HIT/IRQ4 CPU_BG/BADDR31/IRQ5/CINT CPU_DBG CPU_BR IRQ0/NMI_OUT IRQ7/INT_OUT/APE PORESET HRESET SRESET RSTCONF	V_{OL}	—	0.4	V

Table 5. DC Electrical Characteristics [1] (continued)

Characteristic	Symbol	Min	Max	Unit
I_{OL} = 5.3mA CS[0-9] CS(10)/BCTL1 CS(11)/AP(0) BADDR[27–28] ALE BCTL0 PWE[0–7]/PSDDQM[0–7]/PBS[0–7] PSDA10/PGPL0 PSDWE/PGPL1 POE/PSDRAS/PGPL2 PSDCAS/PGPL3 PGTA/PUPMWAIT/PGPL4/PPBS PSDAMUX/PGPL5 LWE[0–3]LSDDQM[0–3]/LBS[0–3]/PCI_CFG[0–3] LSDA10/LGPL0/PCI_MODCKH0 LSDWE/LGPL1/PCI_MODCKH1 LOE/LSDRAS/LGPL2/PCI_MODCKH2 LSDCAS/LGPL3/PCI_MODCKH3 LGTA/LUPMWAIT/LGPL4/LPBS LSDAMUX/LGPL5/PCI_MODCK LWR MODCK[1–3]/AP[1–3]/TC[0–2]/BNKSEL[0–2]	V_{OL}	—	0.4	V
I_{OL} = 3.2mA L_A14/PAR L_A15/FRAME/SMI L_A16/TRDY L_A17/IRDY/CKSTP_OUT L_A18/STOP L_A19/DEVSEL L_A20/IDSEL L_A21/PERR L_A22/SERR L_A23/REQ0 L_A24/REQ1/HSEJSW L_A25/GNT0 L_A26/GNT1/HSLED L_A27/GNT2/HSENUM L_A28/RST/CORE_SRESET L_A29/INTA L_A30/REQ2 L_A31 LCL_D[0-31]/AD[0-31] LCL_DP[0-3]/C/BE[0-3] PA[0–31] PB[4–31] PC[0–31] PD[4–31] TDO QREQ				

1 The default configuration of the CPM pins (PA[0–31], PB[4–31], PC[0–31], PD[4–31]) is input. To prevent excessive DC current, it is recommended to either pull unused pins to GND or VDDH, or to configure them as outputs.

2 TCK, TRST and PORESET have min VIH = 2.5V.

3 The leakage current is measured for nominal VDDH,VCCSYN, and VDD.

4 V_{IL} for IIC interface does not match IIC standard, but does meet IIC standard for V_{OL} and should not cause any compatibility issue.

5 MPC8280, MPC8275VR, MPC8275ZQ only.

4 Thermal Characteristics

Table 6 describes thermal characteristics for both the packages. See Table 2 for information about a given device's package. For the discussions sections 4.1 and 4.5, $P_D = (V_{DD} \times I_{DD}) + PI/O$, where PI/O is the power dissipation of the I/O drivers.

Table 6. Thermal Characteristics

Characteristic	Symbol	Value		Unit	Air Flow
		480 TBGA	516 PBGA		
Junction to ambient—single-layer board [1]	$R_{\theta JA}$	16	27	°C/W	Natural convection
		11	21		1 m/s
Junction to ambient—four-layer board	$R_{\theta JA}$	12	19	°C/W	Natural convection
		9	16		1 m/s
Junction to board [2]	$R_{\theta JB}$	6	11	°C/W	—
Junction to case [3]	$R_{\theta JC}$	2	8	°C/W	—
Junction-to-package top [4]	Ψ_{JT}	2	2	°C/W	—

1 Assumes no thermal vias.

2 Thermal resistance between the die and the printed circuit board per JEDEC JESD51-8. Board temperature is measured on the top surface of the board near the package.

3 Thermal resistance between the die and the case top surface as measured by the cold plate method (MIL SPEC-883 Method 1012.1).

4 Thermal characterization parameter indicating the temperature difference between package top and the junction temperature per JEDEC JESD51-2. When Greek letters are not available, the thermal characterization parameter is written as Psi-JT.

4.1 Estimation with Junction-to-Ambient Thermal Resistance

An estimation of the chip junction temperature, T_J, in C can be obtained from the following equation:

$$T_J = T_A + (R_{\theta JA} \times P_D)$$

where:

T_A = ambient temperature (ºC)

$R_{\theta JA}$ = package junction-to-ambient thermal resistance (ºC/W)

P_D = power dissipation in package

The junction-to-ambient thermal resistance is an industry standard value that provides a quick and easy estimation of thermal performance. However, the answer is only an estimate; test cases have demonstrated that errors of a factor of two (in the quantity $T_J - T_A$) are possible.

4.2 Estimation with Junction-to-Case Thermal Resistance

Historically, the thermal resistance has frequently been expressed as the sum of a junction-to-case thermal resistance and a case-to-ambient thermal resistance:

$$R_{\theta JA} = R_{\theta JC} + R_{\theta CA}$$

where:

$R_{\theta JA}$ = junction-to-ambient thermal resistance (ºC/W)

$R_{\theta JC}$ = junction-to-case thermal resistance (ºC/W)

$R_{\theta CA}$ = case-to-ambient thermal resistance (ºC/W)

$R_{\theta JC}$ is device related and cannot be influenced by the user. The user adjusts the thermal environment to affect the case-to-ambient thermal resistance, $R_{\theta CA}$. For instance, the user can change the air flow around the device, add a heat sink, change the mounting arrangement on the printed circuit board, or change the thermal dissipation on the printed circuit board surrounding the device. This thermal model is most useful for ceramic packages with heat sinks where some 90% of the heat flows through the case and the heat sink to the ambient environment. For most packages, a better model is required.

4.3 Estimation with Junction-to-Board Thermal Resistance

A simple package thermal model which has demonstrated reasonable accuracy (about 20%) is a two-resistor model consisting of a junction-to-board and a junction-to-case thermal resistance. The junction-to-case thermal resistance covers the situation where a heat sink is used or where a substantial amount of heat is dissipated from the top of the package. The junction-to-board thermal resistance describes the thermal performance when most of the heat is conducted to the printed circuit board. It has been observed that the thermal performance of most plastic packages, especially PBGA packages, is strongly dependent on the board temperature.

If the board temperature is known, an estimate of the junction temperature in the environment can be made using the following equation:

$$T_J = T_B + (R_{\theta JB} \times P_D)$$

where:

$R_{\theta JB}$ = junction-to-board thermal resistance (ºC/W)

T_B = board temperature (ºC)

P_D = power dissipation in package

If the board temperature is known and the heat loss from the package case to the air can be ignored, acceptable predictions of junction temperature can be made. For this method to work, the board and board mounting must be similar to the test board used to determine the junction-to-board thermal resistance, namely a 2s2p (board with a power and a ground plane) and by attaching the thermal balls to the ground plane.

4.4 Estimation Using Simulation

When the board temperature is not known, a thermal simulation of the application is needed. The simple two-resistor model can be used with the thermal simulation of the application, or a more accurate and complex model of the package can be used in the thermal simulation.

4.5 Experimental Determination

To determine the junction temperature of the device in the application after prototypes are available, the thermal characterization parameter (Ψ_{JT}) can be used to determine the junction temperature with a measurement of the temperature at the top center of the package case using the following equation:

$$T_J = T_T + (\Psi_{JT} \times P_D)$$

where:

Ψ_{JT} = thermal characterization parameter

T_T = thermocouple temperature on top of package

P_D = power dissipation in package

The thermal characterization parameter is measured per JEDEC JESD51-2 specification using a 40-gauge type T thermocouple epoxied to the top center of the package case. The thermocouple should be positioned so that the thermocouple junction rests on the package. A small amount of epoxy is placed over the thermocouple junction and over 1 mm of wire extending from the junction. The thermocouple wire is placed flat against the case to avoid measurement errors caused by cooling effects of the thermocouple wire.

4.6 Layout Practices

Each VDD and VDDH pin should be provided with a low-impedance path to the board's power supplies. Each ground pin should likewise be provided with a low-impedance path to ground. The power supply pins drive distinct groups of logic on chip. The VDD and VDDH power supplies should be bypassed to ground using by-pass capacitors located as close as possible to the four sides of the package. For filtering high frequency noise, a capacitor of 0.1uF on each VDD and VDDH pin is recommended. Further, for medium frequency noise, a total of 2 capacitors of 47uF for VDD and 2 capacitors of 47uF for VDDH are also recommnded. The capacitor leads and associated printed circuit traces connecting to chip VDD, VDDH and ground should be kept to less than half an inch per capacitor lead. Boards should employ separate inner layers for power and GND planes.

All output pins on the MPC8280 have fast rise and fall times. Printed circuit (PC) trace interconnection length should be minimized to minimize overdamped conditions and reflections caused by these fast output switching times. This recommendation particularly applies to the address and data buses. Maximum PC trace lengths of six inches are recommended. Capacitance calculations should consider all device loads as well as parasitic capacitances due to the PC traces. Attention to proper PCB layout and bypassing becomes especially critical in systems with higher capacitive loads because these loads create higher transient currents in the VDD and GND circuits. Pull up all unused inputs or signals that will be inputs during reset. Special care should be taken to minimize the noise levels on the PLL supply pins.

5 Power Dissipation

Table 7 provides preliminary, estimated power dissipation for various configurations. Note that suitable thermal management is required to ensure the junction temperature does not exceed the maximum specified value. Also note that the I/O power should be included when determining whether to use a heat sink. For a complete list of possible clock configurations, refer to Section 7, "Clock Configuration Modes."

Table 7. Estimated Power Dissipation for Various Configurations [1]

Bus (MHz)	CPM Multiplication Factor	CPM (MHz)	CPU Multiplication Factor	CPU (MHz)	P_{INT}(W) [2, 3]	
					Vddl 1.5 Volts	
					Nominal	Maximum
66.67	2.5	166	3.5	233	0.95	1.0
66.67	2.5	166	4	266	1.0	1.05
66.67	3	200	4	266	1.05	1.1
66.67	3.5	233	4.5	300	1.05	1.15
83.33	3	250	4	333	1.25	1.35
83.33	3	250	4.5	375	1.3	1.4
83.33	3.5	292	5	417	1.45	1.55
100	3	300	4	400	1.5	1.6
100	3	300	4.5	450	1.55	1.65

1 Test temperature = 105° C

2 $P_{INT} = I_{DD} \times V_{DD}$ Watts

3 Values do not include I/O. Add the following estimates for active I/O based on the following bus speeds:
66.7 MHz = 0.45 W (nominal), 0.5 W (maximum)
83.3 MHz = 0.5W (nominal), 0.6 W (maximum)
100 MHz = 0.6 W (nominal), 0.7 W (maximum)

6 AC Electrical Characteristics

The following sections include illustrations and tables of clock diagrams, signals, and CPM outputs and inputs for 66.67/83.33/100 MHz devices. Note that AC timings are based on a 50-pf load for MAX Delay and 10-pf load for MIN delay. Typical output buffer impedances are shown in Table 8.

Table 8. Output Buffer Impedances [1]

Output Buffers	Typical Impedance (Ω)
60x bus	45 or 27 [2]
Local bus	45
Memory controller	45 or 27[2]
Parallel I/O	45
PCI	27

1 These are typical values at 65° C. Impedance may vary by ±25% with process and temperature.

2 On silicon revision 0.0 (mask #: 0K49M), selectable impedance is not available. Impedance is set at 45 Ω. On all other revisions, impedance value is selected through the SIUMCR[20,21]. Refer to the *MPC8280 PowerQUICC II Family Reference Manual*.

6.1 CPM AC Characteristics

Table 9 lists CPM output characteristics.

Table 9. AC Characteristics for CPM Outputs [1]

Spec Number		Characteristic	Value (ns)					
Max	Min		Maximum Delay			Minimum Delay		
			66 MHz	83 MHz	100 MHz	66 MHz	83 MHz	100 MHz
sp36a	sp37a	FCC outputs—internal clock (NMSI)	6	5.5	5.5	0.5	0.5	0.5
sp36b	sp37b	FCC outputs—external clock (NMSI)	8	8	8	2	2	2
sp38a	sp39a	SCC/SMC/SPI/I2C outputs—internal clock (NMSI)	10	10	10	0	0	0
sp38b	sp39b	SCC/SMC/SPI/I2C outputs—external clock (NMSI)	8	8	8	2	2	2
sp40	sp41	TDM outputs/SI	11	11	11	2.5	2.5	2.5
sp42	sp43	TIMER/IDMA outputs	11	11	11	0.5	0.5	0.5
sp42a	sp43a	PIO outputs	11	11	11	0.5	0.5	0.5

[1] Output specifications are measured from the 50% level of the rising edge of CLKIN to the 50% level of the signal. Timings are measured at the pin.

Table 10 lists CPM input characteristics.

NOTE: Rise/Fall Time on CPM Input Pins

It is recommended that the rise/fall time on CPM input pins should not exceed 5 ns. This should be enforced especially on clock signals. Rise time refers to signal transitions from 10% to 90% of VCC; fall time refers to transitions from 90% to 10% of VCC.

Table 10. AC Characteristics for CPM Inputs [1]

Spec Number		Characteristic	Value (ns)					
Setup	Hold		Setup			Hold		
			66 MHz	83 MHz	100 MHz	66 MHz	83 MHz	100 MHz
sp16a	sp17a	FCC inputs—internal clock (NMSI)	6	6	6	0	0	0
sp16b	sp17b	FCC inputs—external clock (NMSI)	2.5	2.5	2.5	2	2	2
sp18a	sp19a	SCC/SMC/SPI/I2C inputs—internal clock (NMSI)	6	6	6	0	0	0
sp18b	sp19b	SCC/SMC/SPI/I2C inputs—external clock (NMSI)	4	4	4	2	2	2
sp20	sp21	TDM inputs/SI	5	5	5	2.5	2.5	2.5
sp22	sp23	PIO/TIMER/IDMA inputs	8	8	8	0.5	0.5	0.5

[1] Input specifications are measured from the 50% level of the signal to the 50% level of the rising edge of CLKIN. Timings are measured at the pin.

NOTE

Although the specifications generally reference the rising edge of the clock, the following AC timing diagrams also apply when the falling edge is the active edge.

Figure 3 shows the FCC internal clock.

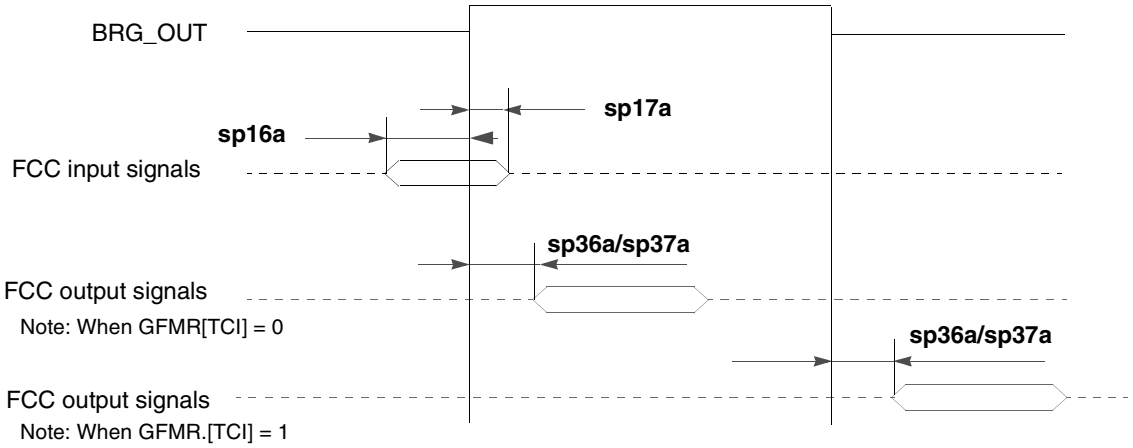

Figure 3. FCC Internal Clock Diagram

Figure 4 shows the FCC external clock.

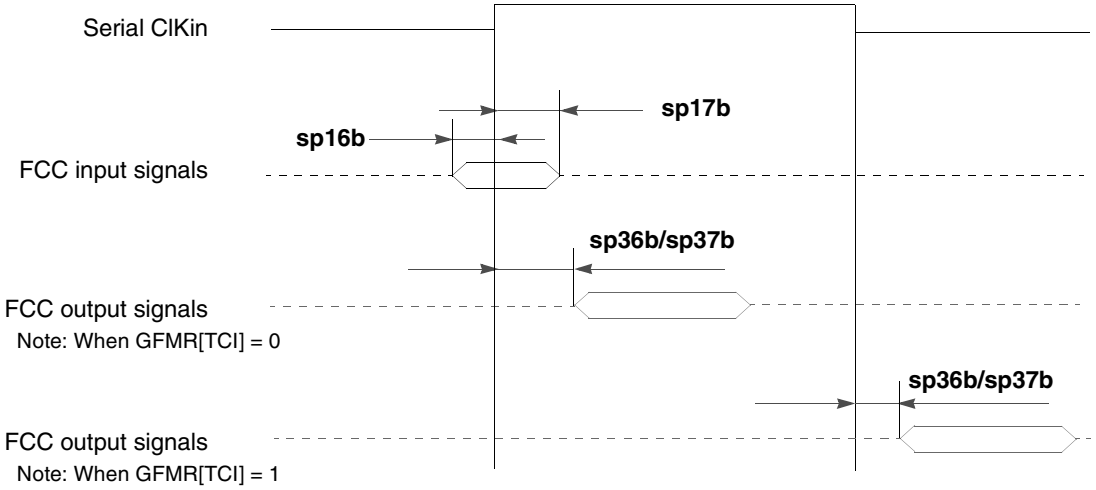

Figure 4. FCC External Clock Diagram

Figure 5 shows the SCC/SMC/SPI/I^{2}C external clock.

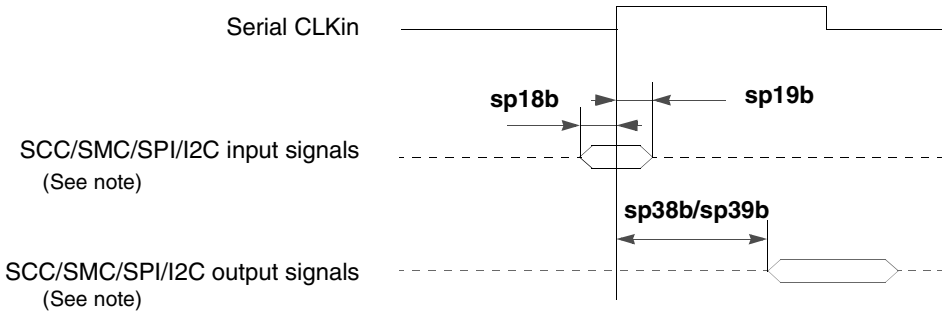

Note: There are four possible timing conditions for SCC and SPI:
1. Input sampled on the rising edge and output driven on the rising edge (shown).
2. Input sampled on the rising edge and output driven on the falling edge.
3. Input sampled on the falling edge and output driven on the falling edge.
4. Input sampled on the falling edge and output driven on the rising edge.

Figure 5. SCC/SMC/SPI/I^{2}C External Clock Diagram

Figure 6 shows the SCC/SMC/SPI/I^{2}C internal clock.

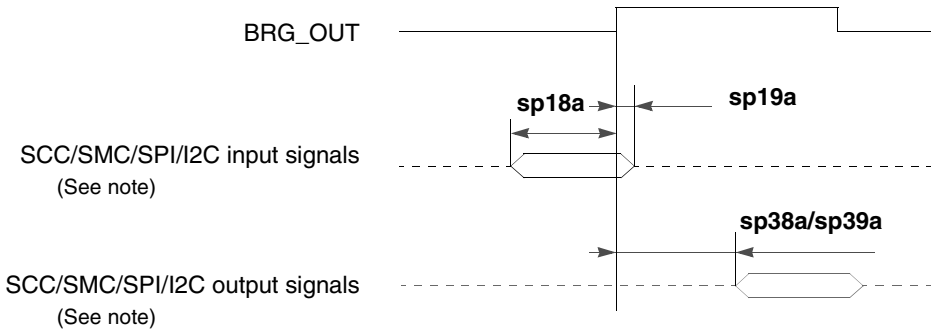

Note: There are four possible timing conditions for SCC and SPI:
1. Input sampled on the rising edge and output driven on the rising edge (shown).
2. Input sampled on the rising edge and output driven on the falling edge.
3. Input sampled on the falling edge and output driven on the falling edge.
4. Input sampled on the falling edge and output driven on the rising edge.

Figure 6. SCC/SMC/SPI/I^{2}C Internal Clock Diagram

Figure 7 shows TDM input and output signals.

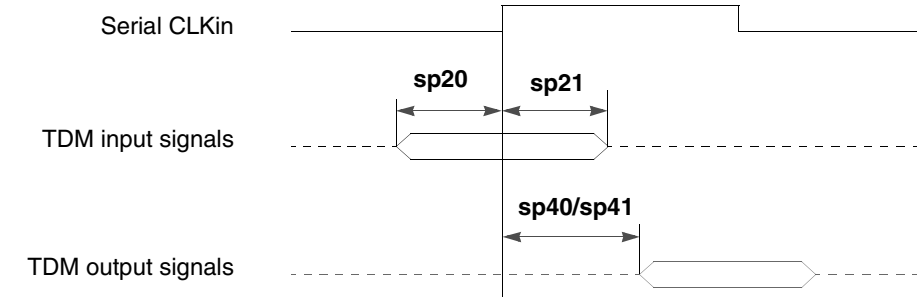

Note: There are four possible TDM timing conditions:
1. Input sampled on the rising edge and output driven on the rising edge (shown).
2. Input sampled on the rising edge and output driven on the falling edge.
3. Input sampled on the falling edge and output driven on the falling edge.
4. Input sampled on the falling edge and output driven on the rising edge.

Figure 7. TDM Signal Diagram

Figure 8 shows PIO and timer signals.

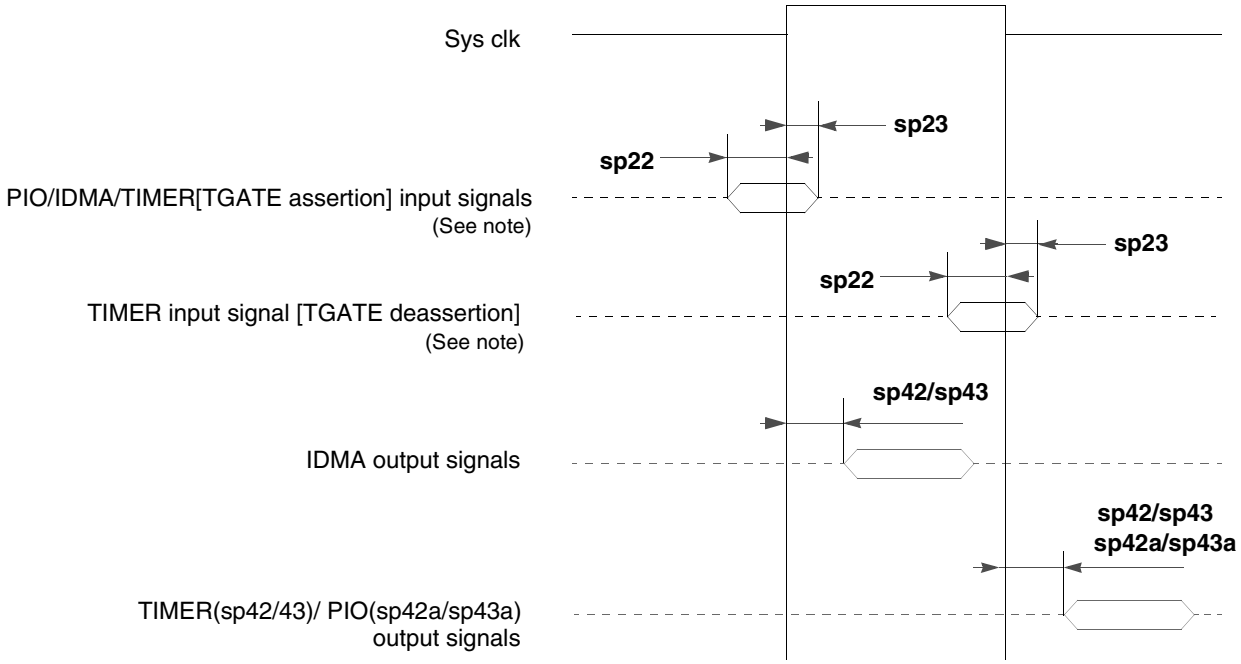

Note: TGATE is asserted on the rising edge of the clock; it is deasserted on the falling edge.

Figure 8. PIO and Timer Signal Diagram

6.2 SIU AC Characteristics

NOTE: CLKIN Jitter and Duty Cycle

The CLKIN input to the MPC8280 should not exceed +/– 150 psec of jitter (peak-to-peak). This represents total input jitter—the combination of short term (cycle-to-cycle) and long term (cumulative). The duty cycle of CLKIN should not exceed the ratio of 40:60. The rise/file time of CLKIN should adhere to the typical SDRAM device AC clock requirement of 1 V/ns to meet SDRAM AC specs.

NOTE: Spread Spectrum Clocking

Spread spectrum clocking is allowed with 1% input frequency down-spread at maximum 60 KHz modulation rate regardless of input frequency.

NOTE: PCI AC Timing

The MPC8280 meets the timing requirements of *PCI Specification Revision 2.2*. Refer to Sections 7.2 and 7.3 and "Note: Tval (Output Hold)" to determine if a specific clock configuration is compliant.

Table 11 lists SIU input characteristics.

Table 11. AC Characteristics for SIU Inputs [1]

Spec Number		Characteristic	Value (ns)					
Setup	Hold		Setup			Hold		
			66 MHz	83 MHz	100 MHz	66 MHz	83 MHz	100 MHz
sp11	sp10	$\overline{\text{AACK}}$/$\overline{\text{TA}}$/$\overline{\text{TS}}$/$\overline{\text{DBG}}$/$\overline{\text{BG}}$/$\overline{\text{BR}}$/$\overline{\text{ARTRY}}$/ $\overline{\text{TEA}}$	6	5	3.5	0.5	0.5	0.5
sp12	sp10	Data bus in normal mode	5	4	3.5	0.5	0.5	0.5
sp13	sp10	Data bus in ECC and PARITY modes	7	5	3.5	0.5	0.5	0.5
sp13a	sp10	Pipeline mode—Data bus (with or without ECC/PARITY)	5	4	2.5	0.5	0.5	0.5
sp14	sp10	DP pins	7	5	3.5	0.5	0.5	0.5
sp14a	sp10	Pipeline mode—DP pins	—	4	2.5	—	0.5	0.5
sp15	sp10	All other pins	5	4	3.5	0.5	0.5	0.5

[1] Input specifications are measured from the 50% level of the signal to the 50% level of the rising edge of CLKIN. Timings are measured at the pin.

Table 12 lists SIU output characteristics.

Table 12. AC Characteristics for SIU Outputs [1]

Spec Number		Characteristic	Value (ns)					
Max	Min		Maximum Delay			Minimum Delay		
			66 MHz	83 MHz	100 MHz	66 MHz	83 MHz	100 MHz
sp31	sp30	$\overline{\text{PSDVAL}}/\overline{\text{TEA}}/\overline{\text{TA}}$	7	6	5.5	1	1	1
sp32	sp30	ADD/ADD_atr./BADDR/CI/GBL/WT	8	6.5	5.5	1	1	1
sp33a	sp30	Data bus [2]	6.5	6.5	5.5	0.7	0.7	0.7
sp33b	sp30	DP	6	5.5	5.5	1	1	1
sp34	sp30	Memory controller signals/ALE	6	5.5	5.5	1	1	1
sp35	sp30	All other signals	6	5.5	5.5	1	1	1
sp35a	sp30	AP	7	7	7	1	1	1

1 Output specifications are measured from the 50% level of the rising edge of CLKIN to the 50% level of the signal. Timings are measured at the pin.

2 To achieve 1 ns of hold time at 66, 83, or 100 MHz, a minimum loading of 20 pF is required.

NOTE

Activating data pipelining (setting BR*x*[DR] in the memory controller) improves the AC timing.

Figure 9 shows the interaction of several bus signals.

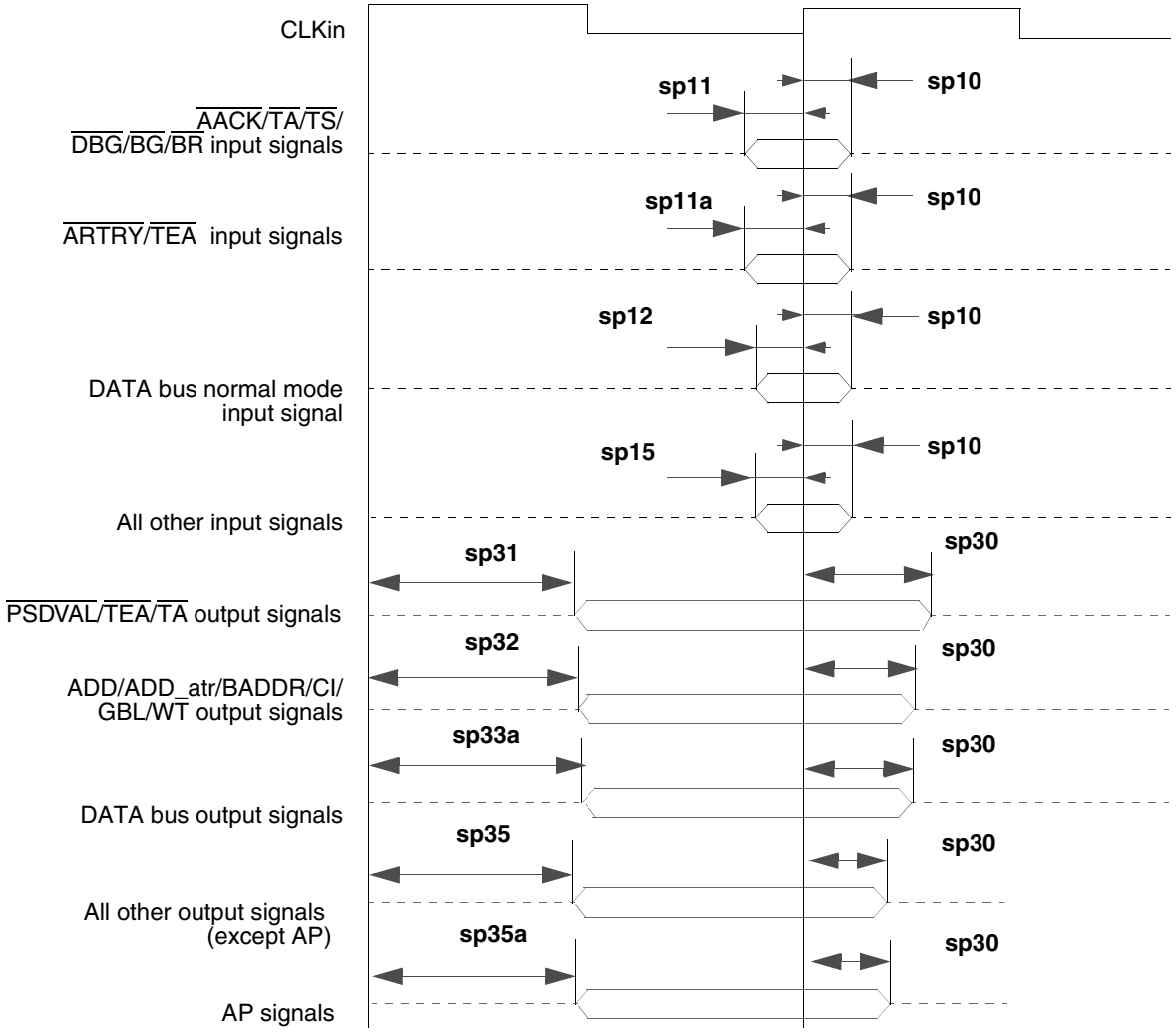

Figure 9. Bus Signals

Figure 10 shows signal behavior for all parity modes (including ECC, RMW parity, and standard parity).

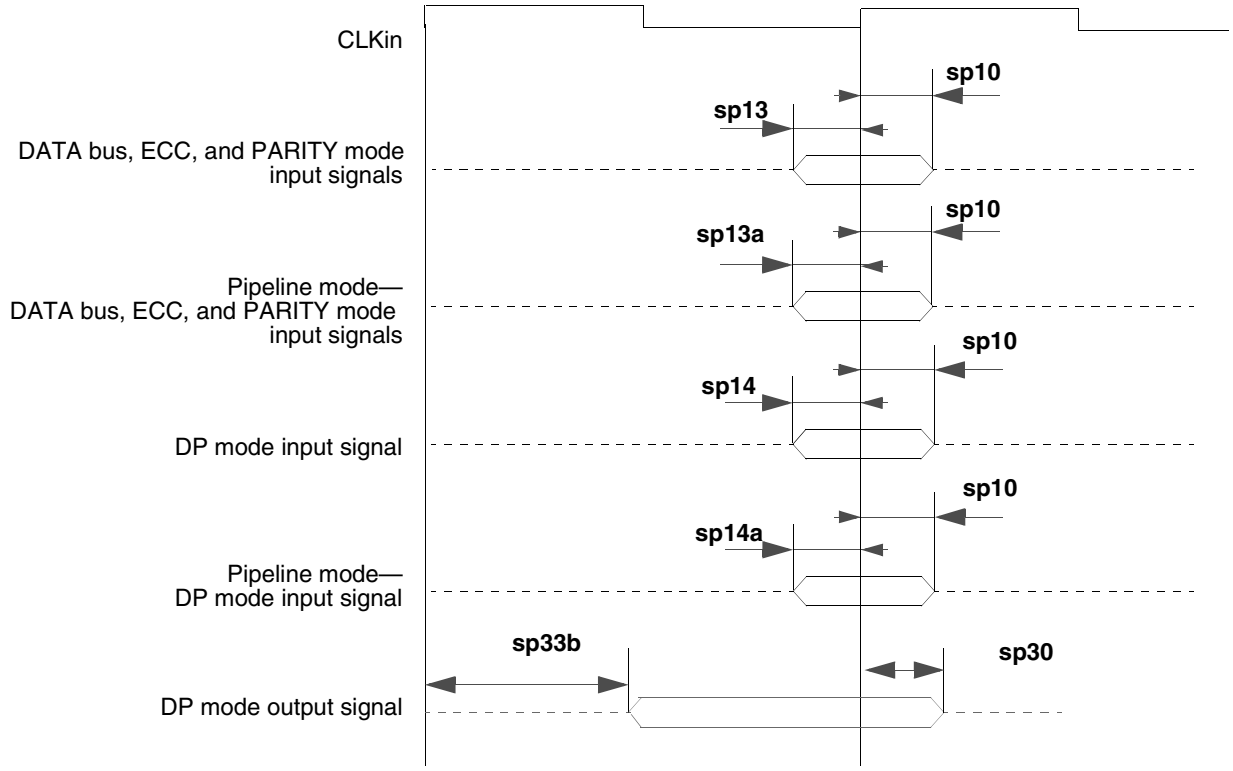

Figure 10. Parity Mode Diagram

Figure 11 shows signal behavior in MEMC mode.

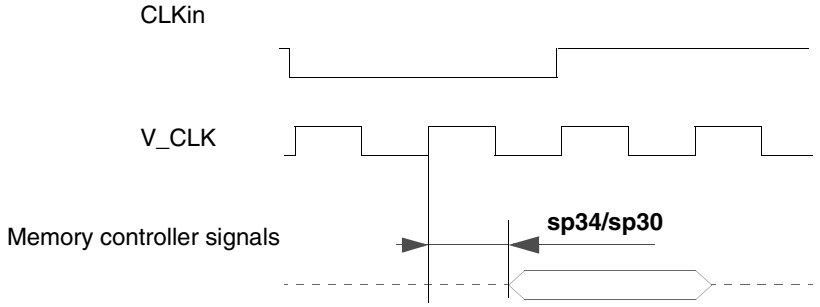

Figure 11. MEMC Mode Diagram

NOTE

Generally, all MPC8280 bus and system output signals are driven from the rising edge of the input clock (CLKin). Memory controller signals, however, trigger on four points within a CLKin cycle. Each cycle is divided by four internal ticks: T1, T2, T3, and T4. T1 always occurs at the rising edge, and T3 at the falling edge, of CLKin. However, the spacing of T2 and T4 depends on the PLL clock ratio selected, as shown in Table 13.

Table 13. Tick Spacing for Memory Controller Signals

PLL Clock Ratio	Tick Spacing (T1 Occurs at the Rising Edge of CLKin)		
	T2	T3	T4
1:2, 1:3, 1:4, 1:5, 1:6	1/4 CLKin	1/2 CLKin	3/4 CLKin
1:2.5	3/10 CLKin	1/2 CLKin	8/10 CLKin
1:3.5	4/14 CLKin	1/2 CLKin	11/14 CLKin

Figure 12 is a representation of the information in Table 13.

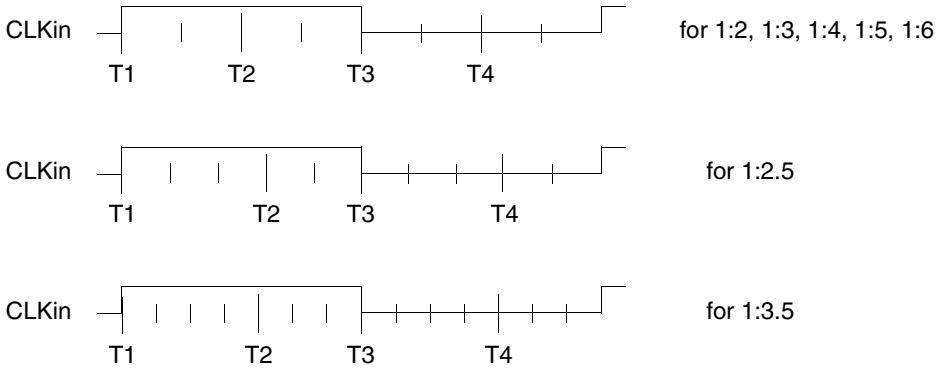

Figure 12. Internal Tick Spacing for Memory Controller Signals

NOTE

The UPM machine outputs change on the internal tick determined by the memory controller programming; the AC specifications are relative to the internal tick. Note that SDRAM and GPCM machine outputs change on CLKin's rising edge.

6.3 JTAG Timings

Table 14 lists the JTAG timings.

Table 14. JTAG Timings[1]

Parameter	Symbol[2]	Min	Max	Unit	Notes
JTAG external clock frequency of operation	f_{JTG}	0	33.3	MHz	
JTAG external clock cycle time	t_{JTG}	30	—	ns	
JTAG external clock pulse width measured at 1.4V	t_{JTKHKL}	15	—	ns	
JTAG external clock rise and fall times	t_{JTGR} and t_{JTGF}	0	5	ns	6
TRST assert time	t_{TRST}	25	—	ns	3, 6
Input setup times Boundary-scan data TMS, TDI	 t_{JTDVKH} t_{JTIVKH}	 4 4	 — —	 ns ns	 4, 7 4, 7

Table 14. JTAG Timings[1] (continued)

Parameter	Symbol[2]	Min	Max	Unit	Notes
Input hold times					
Boundary-scan data	t_{JTDXKH}	10	—	ns	4, 7
TMS, TDI	t_{JTIXKH}	10	—	ns	4, 7
Output valid times					
Boundary-scan data	t_{JTKLDV}	—	10	ns	5, 7
TDO	t_{JTKLOV}	—	10	ns	5, 7
Output hold times					
Boundary-scan data	t_{JTKLDX}	1	—	ns	5, 7
TDO	t_{JTKLOX}	1	—	ns	5, 7
JTAG external clock to output high impedance					
Boundary-scan data	t_{JTKLDZ}	1	10	ns	5, 6
TDO	t_{JTKLOZ}	1	10	ns	5, 6

1 All outputs are measured from the midpoint voltage of the falling/rising edge of t_{TCLK} to the midpoint of the signal in question. The output timings are measured at the pins. All output timings assume a purely resistive 50-Ω load. Time-of-flight delays must be added for trace lengths, vias, and connectors in the system.

2 The symbols used for timing specifications herein follow the pattern of $t_{\text{(first two letters of functional block)(signal)(state)(reference)(state)}}$ for inputs and $t_{\text{(first two letters of functional block)(reference)(state)(signal)(state)}}$ for outputs. For example, t_{JTDVKH} symbolizes JTAG device timing (JT) with respect to the time data input signals (D) reaching the valid state (V) relative to the t_{JTG} clock reference (K) going to the high (H) state or setup time. Also, t_{JTDXKH} symbolizes JTAG timing (JT) with respect to the time data input signals (D) went invalid (X) relative to the t_{JTG} clock reference (K) going to the high (H) state. Note that, in general, the clock reference symbol representation is based on three letters representing the clock of a particular functional. For rise and fall times, the latter convention is used with the appropriate letter: R (rise) or F (fall).

3 TRST is an asynchronous level sensitive signal. The setup time is for test purposes only.

4 Non-JTAG signal input timing with respect to t_{TCLK}.

5 Non-JTAG signal output timing with respect to t_{TCLK}.

6 Guaranteed by design.

7 Guaranteed by design and device characterization.

7 Clock Configuration Modes

The MPC8280 has three clocking modes: local, PCI host, and PCI agent. The clocking mode is set according to three input pins—PCI_MODE, PCI_CFG[0], PCI_MODCK—as shown in Table 15.

Table 15. MPC8280 Clocking Modes

Pins			Clocking Mode	PCI Clock Frequency Range (MHZ)	Reference
PCI_MODE	PCI_CFG[0]	PCI_MODCK[1]			
1	—	—	Local bus	—	Table 16
0	0	0	PCI host	50–66	Table 17
0	0	1		25–50	Table 18
0	1	0	PCI agent	50–66	Table 19
0	1	1		25–50	Table 20

1 Determines PCI clock frequency range. Refer to Sections 7.2 and 7.3.

In each clocking mode, the configuration of bus, core, PCI, and CPM frequencies is determined by seven bits during the power-up reset—three hardware configuration pins (MODCK[1–3]) and four bits from hardware configuration word[28–31] (MODCK_H). Both the PLLs and the dividers are set according to the selected MPC8280 clock operation mode as described in the following sections.

7.1 Local Bus Mode

Table 16 lists clock configurations for the MPC8280 in local bus mode. The frequencies listed are for the purpose of illustration only. Users must select a mode and input bus frequency so that the resulting configuration does not exceed the frequency rating of the user's device.

NOTE

Clock configurations change only after $\overline{\text{PORESET}}$ is asserted.

Table 16. Clock Configurations for Local Bus Mode [1]

Mode [2]	Bus Clock [3] (MHz)		CPM Multiplication Factor [4]	CPM Clock (MHz)		CPU Multiplication Factor [5]	CPU Clock (MHz)	
MODCK_H-MODCK[1-3]	Low	High		Low	High		Low	High
Default Modes (MODCK_H= 0000)								
0000_000	37.5	133.3	3	112.5	400.0	4	150.0	533.3
0000_001	33.3	133.3	3	100.0	400.0	5	166.7	666.7
0000_010	37.5	100.0	4	150.0	400.0	4	150.0	400.0
0000_011	30.0	100.0	4	120.0	400.0	5	150.0	500.0
0000_100	60.0	167.0	2	120.0	334.0	2.5	150.0	417.5
0000_101	50.0	167.0	2	100.0	334.0	3	150.0	501.0
0000_110	60.0	160.0	2.5	150.0	400.0	2.5	150.0	400.0
0000_111	50.0	160.0	2.5	125.0	400.0	3	150.0	480.0
Full Configuration Modes								
0001_000	50.0	167.0	2	100.0	334.0	4	200.0	668.0
0001_001	50.0	167.0	2	100.0	334.0	5	250.0	835.0
0001_010	50.0	145.8	2	100.0	291.7	6	300.0	875.0
0001_011	Reserved							
0001_100	Reserved							
0001_101	37.5	133.3	3	112.5	400.0	4	150.0	533.3
0001_110	33.3	133.3	3	100.0	400.0	5	166.7	666.7
1000_111	33.3	133.3	3	100.0	400.0	5.5	183.3	733.3
0001_111	33.3	133.3	3	100.0	400.0	6	200.0	800.0
0010_000	Reserved							
0010_001	Reserved							

Table 16. Clock Configurations for Local Bus Mode [1] (continued)

Mode [2]	Bus Clock [3] (MHz)		CPM Multiplication Factor [4]	CPM Clock (MHz)		CPU Multiplication Factor [5]	CPU Clock (MHz)	
MODCK_H-MODCK[1-3]	Low	High		Low	High		Low	High
0010_010	37.5	100.0	4	150.0	400.0	4	150.0	400.0
0010_011	30.0	100.0	4	120.0	400.0	5	150.0	500.0
0010_100	25.0	100.0	4	100.0	400.0	6	150.0	600.0
0010_101	25.0	100.0	4	100.0	400.0	7	175.0	700.0
0010_110	25.0	100.0	4	100.0	400.0	8	200.0	800.0
0010_111	Reserved							
0011_000	30.0	80.0	5	150.0	400.0	5	150.0	400.0
0011_001	25.0	80.0	5	125.0	400.0	6	150.0	480.0
0011_010	25.0	80.0	5	125.0	400.0	7	175.0	560.0
0011_011	25.0	80.0	5	125.0	400.0	8	200.0	640.0
0011_100	Reserved							
0011_101	Reserved							
0011_110	25.0	66.7	6	150.0	400.0	6	150.0	400.0
0011_111	25.0	66.7	6	150.0	400.0	7	175.0	466.7
0100_000	25.0	66.7	6	150.0	400.0	8	200.0	533.3
0101_101	75.0	167.0	2	150.0	334.0	2	166.7	334.0
0101_110	60.0	167.0	2	120.0	334.0	2.5	166.7	417.5
0101_111	50.0	167.0	2	100.0	334.0	3	200.0	501.0
0110_000	50.0	167.0	2	100.0	334.0	3.5	250.0	584.5
0110_001	50.0	167.0	2	100.0	334.0	4	250.0	668.0
0110_010	50.0	167.0	2	100.0	334.0	4.5	250.0	751.5
0110_011	Reserved							
0110_100	60.0	160.0	2.5	150.0	400.0	2.5	150.0	400.0
0110_101	50.0	160.0	2.5	125.0	400.0	3	150.0	480.0
0110_110	42.9	160.0	2.5	107.1	400.0	3.5	150.0	560.0
0110_111	40.0	160.0	2.5	100.0	400.0	4	160.0	640.0
0111_000	40.0	160.0	2.5	100.0	400.0	4.5	180.0	720.0

Table 16. Clock Configurations for Local Bus Mode [1] (continued)

Mode [2]	Bus Clock [3] (MHz)		CPM Multiplication Factor [4]	CPM Clock (MHz)		CPU Multiplication Factor [5]	CPU Clock (MHz)	
MODCK_H-MODCK[1-3]	Low	High		Low	High		Low	High
0111_001	Reserved							
0111_010	Reserved							
0111_011	50.0	133.3	3	150.0	400.0	3	150.0	400.0
0111_100	42.9	133.3	3	128.6	400.0	3.5	150.0	466.7
0111_101	37.5	133.3	3	112.5	400.0	4	150.0	533.3
0111_110	33.3	133.3	3	100.0	400.0	4.5	150.0	600.0
0111_111	Reserved							
1000_000	Reserved							
1000_001	Reserved							
1000_010	42.9	114.3	3.5	150.0	400.0	3.5	150.0	400.0
1000_011	37.5	114.3	3.5	131.3	400.0	4	150.0	457.1
1000_100	33.3	114.3	3.5	116.7	400.0	4.5	150.0	514.3
1000_101	30.0	114.3	3.5	105.0	400.0	5	150.0	571.4
1000_110	28.6	114.3	3.5	100.0	400.0	5.5	150.0	628.6
1100_000	Reserved							
1100_001	Reserved							
1100_010	Reserved							
1101_000	Reserved							

1 The “low” values are the minimum allowable frequencies for a given clock mode. The minimum bus frequency in a table entry guarantees only the required minimum CPU operating frequency. The “high” values are for the purpose of illustration only. Users must select a mode and input bus frequency so that the resulting configuration does not violate the frequency rating of the user’s device. The minimum CPM frequency is 120 MHz. Minimum CPU frequency is determined by the clock mode. For modes with a CPU multiplication factor <= 3, the minimum CPU frequency is 150 MHz for commercial temperature devices and 175 MHz for extended temperature devices. For modes with a CPU multiplication factor >= 3.5: for Rev0.1 the minimum CPU frequency is 250 MHz; for RevA or later the minimum CPU frequency is 150 MHz for commercial temperature devices and 175 MHz for extended temperature devices.

2 MODCK_H = hard reset configuration word [28–31]. MODCK[1-3] = three hardware configuration pins.

3 60x and local bus frequency. Identical to CLKIN.

4 CPM multiplication factor = CPM clock/bus clock

5 CPU multiplication factor = Core PLL multiplication factor

7.2 PCI Host Mode

Table 17 and Table 18 show clock configurations for PCI host mode. The frequencies listed are for the purpose of illustration only. Users must select a mode and input bus frequency so that the resulting configuration does not exceed the frequency rating of the user's device. In addition, note the following:

NOTE: PCI_MODCK

In PCI mode only, PCI_MODCK comes from the LGPL5 pin and MODCK_H[0–3] comes from {LGPL0, LGPL1, LGPL2, LGPL3}.

NOTE: Tval (Output Hold)

The minimum Tval = 2 ns when PCI_MODCK = 1, and the minimum Tval = 1 ns when PCI_MODCK = 0. Therefore, designers should use clock configurations that fit this condition to achieve PCI-compliant AC timing.

Table 17. Clock Configurations for PCI Host Mode (PCI_MODCK=0) [1, 2]

Mode [3]	Bus Clock [4] (MHz)		CPM Multiplication Factor [5]	CPM Clock (MHz)		CPU Multiplication Factor [6]	CPU Clock (MHz)		PCI Division Factor	PCI Clock (MHz)	
MODCK_H-MODCK[1-3]	Low	High		Low	High		Low	High		Low	High
Default Modes (MODCK_H=0000)											
0000_000	60.0	66.7	2	120.0	133.3	2.5	150.0	166.7	2	60.0	66.7
0000_001	50.0	66.7	2	100.0	133.3	3	150.0	200.0	2	50.0	66.7
0000_010	60.0	80.0	2.5	150.0	200.0	3	180.0	240.0	3	50.0	66.7
0000_011	60.0	80.0	2.5	150.0	200.0	3.5	210.0	280.0	3	50.0	66.7
0000_100	60.0	80.0	2.5	150.0	200.0	4	240.0	320.0	3	50.0	66.7
0000_101	50.0	66.7	3	150.0	200.0	3	150.0	200.0	3	50.0	66.7
0000_110	50.0	66.7	3.5	150.0	200.0	3.5	175.0	233.3	3	50.0	66.7
0000_111	50.0	66.7	3	150.0	200.0	4	200.0	266.6	3	50.0	66.7
Full Configuration Modes											
0001_000	50.0	66.7	3	150.0	200.0	5	250.0	333.3	3	50.0	66.7
0001_001	50.0	66.7	3	150.0	200.0	6	300.0	400.0	3	50.0	66.7
0001_010	50.0	66.7	3	150.0	200.0	7	350.0	466.6	3	50.0	66.7
0001_011	50.0	66.7	3	150.0	200.0	8	400.0	533.3	3	50.0	66.7
0010_000	50.0	66.7	4	200.0	266.6	5	250.0	333.3	4	50.0	66.7
0010_001	50.0	66.7	4	200.0	266.6	6	300.0	400.0	4	50.0	66.7
0010_010	50.0	66.7	4	200.0	266.6	7	350.0	466.6	4	50.0	66.7
0010_011	50.0	66.7	4	200.0	266.6	8	400.0	533.3	4	50.0	66.7

Table 17. Clock Configurations for PCI Host Mode (PCI_MODCK=0) [1, 2] (continued)

Mode [3]	Bus Clock [4] (MHz)		CPM Multiplication Factor [5]	CPM Clock (MHz)		CPU Multiplication Factor [6]	CPU Clock (MHz)		PCI Division Factor	PCI Clock (MHz)	
MODCK_H-MODCK[1-3]	Low	High		Low	High		Low	High		Low	High
0010_100	75.0	100.0	4	300.0	400.0	5	375.0	500.0	6	50.0	66.7
0010_101	75.0	100.0	4	300.0	400.0	5.5	412.5	549.9	6	50.0	66.7
0010_110	75.0	100.0	4	300.0	400.0	6	450.0	599.9	6	50.0	66.7
0011_000	50.0	66.7	5	250.0	333.3	5	250.0	333.3	5	50.0	66.7
0011_001	50.0	66.7	5	250.0	333.3	6	300.0	400.0	5	50.0	66.7
0011_010	50.0	66.7	5	250.0	333.3	7	350.0	466.6	5	50.0	66.7
0011_011	50.0	66.7	5	250.0	333.3	8	400.0	533.3	5	50.0	66.7
0100_000	Reserved										
0100_001	50.0	66.7	6	300.0	400.0	6	300.0	400.0	6	50.0	66.7
0100_010	50.0	66.7	6	300.0	400.0	7	350.0	466.6	6	50.0	66.7
0100_011	50.0	66.7	6	300.0	400.0	8	400.0	533.3	6	50.0	66.7
0101_000	60.0	66.7	2	120.0	133.3	2.5	150.0	166.7	2	60.0	66.7
0101_001	50.0	66.7	2	100.0	133.3	3	150.0	200.0	2	50.0	66.7
0101_010	50.0	66.7	2	100.0	133.3	3.5	175.0	233.3	2	50.0	66.7
0101_011	50.0	66.7	2	100.0	133.3	4	200.0	266.6	2	50.0	66.7
0101_100	50.0	66.7	2	100.0	133.3	4.5	225.0	300.0	2	50.0	66.7
0110_000	60.0	80.0	2.5	150.0	200.0	2.5	150.0	200.0	3	50.0	66.7
0110_001	60.0	80.0	2.5	150.0	200.0	3	180.0	240.0	3	50.0	66.7
0110_010	60.0	80.0	2.5	150.0	200.0	3.5	210.0	280.0	3	50.0	66.7
0110_011	60.0	80.0	2.5	150.0	200.0	4	240.0	320.0	3	50.0	66.7
0110_100	60.0	80.0	2.5	150.0	200.0	4.5	270.0	360.0	3	50.0	66.7
0110_101	60.0	80.0	2.5	150.0	200.0	5	300.0	400.0	3	50.0	66.7
0110_110	60.0	80.0	2.5	150.0	200.0	6	360.0	480.0	3	50.0	66.7
0111_000	Reserved										
0111_001	50.0	66.7	3	150.0	200.0	3	150.0	200.0	3	50.0	66.7
0111_010	50.0	66.7	3	150.0	200.0	3.5	175.0	233.3	3	50.0	66.7
0111_011	50.0	66.7	3	150.0	200.0	4	200.0	266.6	3	50.0	66.7

Table 17. Clock Configurations for PCI Host Mode (PCI_MODCK=0) [1, 2] (continued)

Mode [3]	Bus Clock [4] (MHz)		CPM Multiplication Factor [5]	CPM Clock (MHz)		CPU Multiplication Factor [6]	CPU Clock (MHz)		PCI Division Factor	PCI Clock (MHz)	
MODCK_H-MODCK[1-3]	Low	High		Low	High		Low	High		Low	High
0111_100	50.0	66.7	3	150.0	200.0	4.5	225.0	300.0	3	50.0	66.7
1000_000	Reserved										
1000_001	66.7	88.9	3	200.0	266.6	3	200.0	266.6	4	50.0	66.7
1000_010	66.7	88.9	3	200.0	266.6	3.5	233.3	311.1	4	50.0	66.7
1000_011	66.7	88.9	3	200.0	266.6	4	266.7	355.5	4	50.0	66.7
1000_100	66.7	88.9	3	200.0	266.6	4.5	300.0	400.0	4	50.0	66.7
1000_101	66.7	88.9	3	200.0	266.6	6	400.0	533.3	4	50.0	66.7
1000_110	66.7	88.9	3	200.0	266.6	6.5	433.3	577.7	4	50.0	66.7
1001_000	Reserved										
1001_001	Reserved										
1001_010	57.1	76.2	3.5	200.0	266.6	3.5	200.0	266.6	4	50.0	66.7
1001_011	57.1	76.2	3.5	200.0	266.6	4	228.6	304.7	4	50.0	66.7
1001_100	57.1	76.2	3.5	200.0	266.6	4.5	257.1	342.8	4	50.0	66.7
1001_101	85.7	114.3	3.5	300.0	400.0	5	428.6	571.4	6	50.0	66.7
1001_110	85.7	114.3	3.5	300.0	400.0	5.5	471.4	628.5	6	50.0	66.7
1001_111	85.7	114.3	3.5	300.0	400.0	6	514.3	685.6	6	50.0	66.7
1010_000	75.0	100.0	2	150.0	200.0	2	150.0	200.0	3	50.0	66.7
1010_001	75.0	100.0	2	150.0	200.0	2.5	187.5	250.0	3	50.0	66.7
1010_010	75.0	100.0	2	150.0	200.0	3	225.0	300.0	3	50.0	66.7
1010_011	75.0	100.0	2	150.0	200.0	3.5	262.5	350.0	3	50.0	66.7
1010_100	75.0	100.0	2	150.0	200.0	4	300.0	400.0	3	50.0	66.7
1011_000	Reserved										
1011_001	80.0	106.7	2.5	200.0	266.6	2.5	200.0	266.6	4	50.0	66.7
1011_010	80.0	106.7	2.5	200.0	266.6	3	240.0	320.0	4	50.0	66.7
1011_011	80.0	106.7	2.5	200.0	266.6	3.5	280.0	373.3	4	50.0	66.7
1011_100	80.0	106.7	2.5	200.0	266.6	4	320.0	426.6	4	50.0	66.7
1011_101	80.0	106.7	2.5	200.0	266.6	4.5	360.0	480.0	4	50.0	66.7

Table 17. Clock Configurations for PCI Host Mode (PCI_MODCK=0) [1, 2] (continued)

Mode [3]	Bus Clock [4] (MHz)		CPM Multiplication Factor [5]	CPM Clock (MHz)		CPU Multiplication Factor [6]	CPU Clock (MHz)		PCI Division Factor	PCI Clock (MHz)	
MODCK_H-MODCK[1-3]	Low	High		Low	High		Low	High		Low	High
1101_000	100.0	133.3	2.5	250.0	333.3	3	300.0	400.0	5	50.0	66.7
1101_001	100.0	133.3	2.5	250.0	333.3	3.5	350.0	466.6	5	50.0	66.7
1101_010	100.0	133.3	2.5	250.0	333.3	4	400.0	533.3	5	50.0	66.7
1101_011	100.0	133.3	2.5	250.0	333.3	4.5	450.0	599.9	5	50.0	66.7
1101_100	100.0	133.3	2.5	250.0	333.3	5	500.0	666.6	5	50.0	66.7
1101_101	125.0	166.7	2	250.0	333.3	3	375.0	500.0	5	50.0	66.7
1101_110	125.0	166.7	2	250.0	333.3	4	500.0	666.6	5	50.0	66.7
1110_000	100.0	133.3	3	300.0	400.0	3.5	350.0	466.6	6	50.0	66.7
1110_001	100.0	133.3	3	300.0	400.0	4	400.0	533.3	6	50.0	66.7
1110_010	100.0	133.3	3	300.0	400.0	4.5	450.0	599.9	6	50.0	66.7
1110_011	100.0	133.3	3	300.0	400.0	5	500.0	666.6	6	50.0	66.7
1110_100	100.0	133.3	3	300.0	400.0	5.5	550.0	733.3	6	50.0	66.7
1100_000	Reserved										
1100_001	Reserved										
1100_010	Reserved										

1 The “low” values are the minimum allowable frequencies for a given clock mode. The minimum bus frequency in a table entry guarantees only the required minimum CPU operating frequency. The “high” values are for the purpose of illustration only. Users must select a mode and input bus frequency so that the resulting configuration does not violate the frequency rating of the user’s device. The minimum CPM frequency is 120 MHz. Minimum CPU frequency is determined by the clock mode. For modes with a CPU multiplication factor <= 3, the minimum CPU frequency is 150 MHz for commercial temperature devices and 175 MHz for extended temperature devices. For modes with a CPU multiplication factor >= 3.5: for Rev0.1 the minimum CPU frequency is 250 MHz; for RevA or later the minimum CPU frequency is 150 MHz for commercial temperature devices and 175 MHz for extended temperature devices.

2 As Table 15 shows, PCI_MODCK determines the PCI clock frequency range. Refer to Table 18 for lower configurations.

3 MODCK_H = hard reset configuration word [28–31]. MODCK[1-3] = three hardware configuration pins.

4 60x and local bus frequency. Identical to CLKIN.

5 CPM multiplication factor = CPM clock/bus clock

6 CPU multiplication factor = Core PLL multiplication factor

Table 18. Clock Configurations for PCI Host Mode (PCI_MODCK=1) [1, 2]

Mode [3]	Bus Clock [4] (MHz)		CPM Multiplication Factor [5]	CPM Clock (MHz)		CPU Multiplication Factor [6]	CPU Clock (MHz)		PCI Division Factor	PCI Clock (MHz)	
MODCK_H-MODCK[1-3]	Low	High		Low	High		Low	High		Low	High
Default Modes (MODCK_H=0000)											
0000_000	60.0	100.0	2	120.0	200.0	2.5	150.0	250.0	4	30.0	50.0
0000_001	50.0	100.0	2	100.0	200.0	3	150.0	300.0	4	25.0	50.0
0000_010	60.0	120.0	2.5	150.0	300.0	3	180.0	360.0	6	25.0	50.0
0000_011	60.0	120.0	2.5	150.0	300.0	3.5	210.0	420.0	6	25.0	50.0
0000_100	60.0	120.0	2.5	150.0	300.0	4	240.0	480.0	6	25.0	50.0
0000_101	50.0	100.0	3	150.0	300.0	3	150.0	300.0	6	25.0	50.0
0000_110	50.0	100.0	3	150.0	300.0	3.5	175.0	350.0	6	25.0	50.0
0000_111	50.0	100.0	3	150.0	300.0	4	200.0	400.0	6	25.0	50.0
Full Configuration Modes											
0001_000	50.0	100.0	3	150.0	300.0	5	250.0	500.0	6	25.0	50.0
0001_001	50.0	100.0	3	150.0	300.0	6	300.0	600.0	6	25.0	50.0
0001_010	50.0	100.0	3	150.0	300.0	7	350.0	700.0	6	25.0	50.0
0001_011	50.0	100.0	3	150.0	300.0	8	400.0	800.0	6	25.0	50.0
0010_000	50.0	100.0	4	200.0	400.0	5	250.0	500.0	8	25.0	50.0
0010_001	50.0	100.0	4	200.0	400.0	6	300.0	600.0	8	25.0	50.0
0010_010	50.0	100.0	4	200.0	400.0	7	350.0	700.0	8	25.0	50.0
0010_011	50.0	100.0	4	200.0	400.0	8	400.0	800.0	8	25.0	50.0
0010_100	37.5	75.0	4	150.0	300.0	5	187.5	375.0	6	25.0	50.0
0010_101	37.5	75.0	4	150.0	300.0	5.5	206.3	412.5	6	25.0	50.0
0010_110	37.5	75.0	4	150.0	300.0	6	225.0	450.0	6	25.0	50.0
0011_000	30.0	50.0	5	150.0	250.0	5	150.0	250.0	5	30.0	50.0
0011_001	25.0	50.0	5	125.0	250.0	6	150.0	300.0	5	25.0	50.0
0011_010	25.0	50.0	5	125.0	250.0	7	175.0	350.0	5	25.0	50.0
0011_011	25.0	50.0	5	125.0	250.0	8	200.0	400.0	5	25.0	50.0
0100_000	Reserved										
0100_001	25.0	50.0	6	150.0	300.0	6	150.0	300.0	6	25.0	50.0
0100_010	25.0	50.0	6	150.0	300.0	7	175.0	350.0	6	25.0	50.0

Table 18. Clock Configurations for PCI Host Mode (PCI_MODCK=1) [1, 2] (continued)

Mode [3]	Bus Clock [4] (MHz)		CPM Multiplication Factor [5]	CPM Clock (MHz)		CPU Multiplication Factor [6]	CPU Clock (MHz)		PCI Division Factor	PCI Clock (MHz)	
MODCK_H-MODCK[1-3]	Low	High		Low	High		Low	High		Low	High
0100_011	25.0	50.0	6	150.0	300.0	8	200.0	400.0	6	25.0	50.0
0101_000	60.0	100.0	2	120.0	200.0	2.5	150.0	250.0	4	30.0	50.0
0101_001	50.0	100.0	2	100.0	200.0	3	150.0	300.0	4	25.0	50.0
0101_010	50.0	100.0	2	100.0	200.0	3.5	175.0	350.0	4	25.0	50.0
0101_011	50.0	100.0	2	100.0	200.0	4	200.0	400.0	4	25.0	50.0
0101_100	50.0	100.0	2	100.0	200.0	4.5	225.0	450.0	4	25.0	50.0
0110_000	60.0	120.0	2.5	150.0	300.0	2.5	150.0	300.0	6	25.0	50.0
0110_001	60.0	120.0	2.5	150.0	300.0	3	180.0	360.0	6	25.0	50.0
0110_010	60.0	120.0	2.5	150.0	300.0	3.5	210.0	420.0	6	25.0	50.0
0110_011	60.0	120.0	2.5	150.0	300.0	4	240.0	480.0	6	25.0	50.0
0110_100	60.0	120.0	2.5	150.0	300.0	4.5	270.0	540.0	6	25.0	50.0
0110_101	60.0	120.0	2.5	150.0	300.0	5	300.0	600.0	6	25.0	50.0
0110_110	60.0	120.0	2.5	150.0	300.0	6	360.0	720.0	6	25.0	50.0
0111_000	Reserved										
0111_001	50.0	100.0	3	150.0	300.0	3	150.0	300.0	6	25.0	50.0
0111_010	50.0	100.0	3	150.0	300.0	3.5	175.0	350.0	6	25.0	50.0
0111_011	50.0	100.0	3	150.0	300.0	4	200.0	400.0	6	25.0	50.0
0111_100	50.0	100.0	3	150.0	300.0	4.5	225.0	450.0	6	25.0	50.0
1000_000	Reserved										
1000_001	66.7	133.3	3	200.0	400.0	3	200.0	400.0	8	25.0	50.0
1000_010	66.7	133.3	3	200.0	400.0	3.5	233.3	466.7	8	25.0	50.0
1000_011	66.7	133.3	3	200.0	400.0	4	266.7	533.3	8	25.0	50.0
1000_100	66.7	133.3	3	200.0	400.0	4.5	300.0	600.0	8	25.0	50.0
1000_101	66.7	133.3	3	200.0	400.0	6	400.0	800.0	8	25.0	50.0
1000_110	66.7	133.3	3	200.0	400.0	6.5	433.3	866.7	8	25.0	50.0
1001_000	Reserved										
1001_001	Reserved										

Table 18. Clock Configurations for PCI Host Mode (PCI_MODCK=1) [1, 2] (continued)

Mode [3]	Bus Clock [4] (MHz)		CPM Multiplication Factor [5]	CPM Clock (MHz)		CPU Multiplication Factor [6]	CPU Clock (MHz)		PCI Division Factor	PCI Clock (MHz)	
MODCK_H-MODCK[1-3]	Low	High		Low	High		Low	High		Low	High
1001_010	57.1	114.3	3.5	200.0	400.0	3.5	200.0	400.0	8	25.0	50.0
1001_011	57.1	114.3	3.5	200.0	400.0	4	228.6	457.1	8	25.0	50.0
1001_100	57.1	114.3	3.5	200.0	400.0	4.5	257.1	514.3	8	25.0	50.0
1001_101	42.9	85.7	3.5	150.0	300.0	5	214.3	428.6	6	25.0	50.0
1001_110	42.9	85.7	3.5	150.0	300.0	5.5	235.7	471.4	6	25.0	50.0
1001_111	42.9	85.7	3.5	150.0	300.0	6	257.1	514.3	6	25.0	50.0
1010_000	75.0	150.0	2	150.0	300.0	2	150.0	300.0	6	25.0	50.0
1010_001	75.0	150.0	2	150.0	300.0	2.5	187.5	375.0	6	25.0	50.0
1010_010	75.0	150.0	2	150.0	300.0	3	225.0	450.0	6	25.0	50.0
1010_011	75.0	150.0	2	150.0	300.0	3.5	262.5	525.0	6	25.0	50.0
1010_100	75.0	150.0	2	150.0	300.0	4	300.0	600.0	6	25.0	50.0
1011_000	Reserved										
1011_001	80.0	160.0	2.5	200.0	400.0	2.5	200.0	400.0	8	25.0	50.0
1011_010	80.0	160.0	2.5	200.0	400.0	3	240.0	480.0	8	25.0	50.0
1011_011	80.0	160.0	2.5	200.0	400.0	3.5	280.0	560.0	8	25.0	50.0
1011_100	80.0	160.0	2.5	200.0	400.0	4	320.0	640.0	8	25.0	50.0
1011_101	80.0	160.0	2.5	200.0	400.0	4.5	360.0	720.0	8	25.0	50.0
1101_000	50.0	100.0	2.5	125.0	250.0	3	150.0	300.0	5	25.0	50.0
1101_001	50.0	100.0	2.5	125.0	250.0	3.5	175.0	350.0	5	25.0	50.0
1101_010	50.0	100.0	2.5	125.0	250.0	4	200.0	400.0	5	25.0	50.0
1101_011	50.0	100.0	2.5	125.0	250.0	4.5	225.0	450.0	5	25.0	50.0
1101_100	50.0	100.0	2.5	125.0	250.0	5	250.0	500.0	5	25.0	50.0
1101_101	62.5	125.0	2	125.0	250.0	3	187.5	375.0	5	25.0	50.0
1101_110	62.5	125.0	2	125.0	250.0	4	250.0	500.0	5	25.0	50.0
1110_000	50.0	100.0	3	150.0	300.0	3.5	175.0	350.0	6	25.0	50.0
1110_001	50.0	100.0	3	150.0	300.0	4	200.0	400.0	6	25.0	50.0

Table 18. Clock Configurations for PCI Host Mode (PCI_MODCK=1) [1, 2] (continued)

Mode [3]	Bus Clock [4] (MHz)		CPM Multiplication Factor [5]	CPM Clock (MHz)		CPU Multiplication Factor [6]	CPU Clock (MHz)		PCI Division Factor	PCI Clock (MHz)	
MODCK_H-MODCK[1-3]	Low	High		Low	High		Low	High		Low	High
1110_010	50.0	100.0	3	150.0	300.0	4.5	225.0	450.0	6	25.0	50.0
1110_011	50.0	100.0	3	150.0	300.0	5	250.0	500.0	6	25.0	50.0
1110_100	50.0	100.0	3	150.0	300.0	5.5	275.0	550.0	6	25.0	50.0
1100_000	Reserved										
1100_001	Reserved										
1100_010	Reserved										

1 The “low” values are the minimum allowable frequencies for a given clock mode. The minimum bus frequency in a table entry guarantees only the required minimum CPU operating frequency. The “high” values are for the purpose of illustration only. Users must select a mode and input bus frequency so that the resulting configuration does not violate the frequency rating of the user’s device. The minimum CPM frequency is 120 MHz. Minimum CPU frequency is determined by the clock mode. For modes with a CPU multiplication factor <= 3, the minimum CPU frequency is 150 MHz for commercial temperature devices and 175 MHz for extended temperature devices. For modes with a CPU multiplication factor >= 3.5: for Rev0.1 the minimum CPU frequency is 250 MHz; for RevA or later the minimum CPU frequency is 150 MHz for commercial temperature devices and 175 MHz for extended temperature devices.

2 As Table 15 shows, PCI_MODCK determines the PCI clock frequency range. Refer to Table 17 for higher configurations.

3 MODCK_H = hard reset configuration word [28–31]. MODCK[1-3] = three hardware configuration pins.

4 60x and local bus frequency. Identical to CLKIN.

5 CPM multiplication factor = CPM clock/bus clock

6 CPU multiplication factor = Core PLL multiplication factor

7.3 PCI Agent Mode

Table 19 and Table 20 show configurations for PCI agent mode. The frequencies listed are for the purpose of illustration only. Users must select a mode and input bus frequency so that the resulting configuration does not exceed the frequency rating of the user’s device. In addition, note the following:

NOTE: PCI_MODCK

In PCI mode only, PCI_MODCK comes from the LGPL5 pin and MODCK_H[0–3] comes from {LGPL0, LGPL1, LGPL2, LGPL3}.

NOTE: Tval (Output Hold)

The minimum Tval = 2 ns when PCI_MODCK = 1, and the minimum Tval = 1 ns when PCI_MODCK = 0. Therefore, designers should use clock configurations that fit this condition to achieve PCI-compliant AC timing.

Table 19. Clock Configurations for PCI Agent Mode (PCI_MODCK=0) [1, 2]

Mode [3]	PCI Clock (MHz)		CPM Multiplication Factor [4]	CPM Clock (MHz)		CPU Multiplication Factor [5]	CPU Clock (MHz)		Bus Division Factor	Bus Clock (MHz)	
MODCK_H-MODCK[1-3]	Low	High		Low	High		Low	High		Low	High
Default Modes (MODCK_H=0000											
0000_000	60.0	66.7	2	120.0	133.3	2.5	150.0	166.7	2	60.0	66.7
0000_001	50.0	66.7	2	100.0	133.3	3	150.0	200.0	2	50.0	66.7
0000_010	50.0	66.7	3	150.0	200.0	3	150.0	200.0	3	50.0	66.7
0000_011	50.0	66.7	3	150.0	200.0	4	200.0	266.6	3	50.0	66.7
0000_100	50.0	66.7	3	150.0	200.0	3	180.0	240.0	2.5	60.0	80.0
0000_101	50.0	66.7	3	150.0	200.0	3.5	210.0	280.0	2.5	60.0	80.0
0000_110	50.0	66.7	4	200.0	266.6	3.5	233.3	311.1	3	66.7	88.9
0000_111	50.0	66.7	4	200.0	266.6	3	240.0	320.0	2.5	80.0	106.7
Full Configuration Modes											
0001_001	60.0	66.7	2	120.0	133.3	5	150.0	166.7	4	30.0	33.3
0001_010	50.0	66.7	2	100.0	133.3	6	150.0	200.0	4	25.0	33.3
0001_011	50.0	66.7	2	100.0	133.3	7	175.0	233.3	4	25.0	33.3
0001_100	50.0	66.7	2	100.0	133.3	8	200.0	266.6	4	25.0	33.3
0010_001	50.0	66.7	3	150.0	200.0	3	180.0	240.0	2.5	60.0	80.0
0010_010	50.0	66.7	3	150.0	200.0	3.5	210.0	280.0	2.5	60.0	80.0
0010_011	50.0	66.7	3	150.0	200.0	4	240.0	320.0	2.5	60.0	80.0
0010_100	50.0	66.7	3	150.0	200.0	4.5	270.0	360.0	2.5	60.0	80.0
0011_000	Reserved										
0011_001	Reserved										
0011_010	Reserved										
0011_011	Reserved										
0011_100	Reserved										
0100_000	Reserved										
0100_001	50.0	66.7	3	150.0	200.0	3	150.0	200.0	3	50.0	66.7
0100_010	50.0	66.7	3	150.0	200.0	3.5	175.0	200.0	3	50.0	66.7
0100_011	50.0	66.7	3	150.0	200.0	4	200.0	266.6	3	50.0	66.7
0100_100	50.0	66.7	3	150.0	200.0	4.5	225.0	300.0	3	50.0	66.7

Table 19. Clock Configurations for PCI Agent Mode (PCI_MODCK=0) [1, 2] (continued)

Mode [3]	PCI Clock (MHz)		CPM Multiplication Factor [4]	CPM Clock (MHz)		CPU Multiplication Factor [5]	CPU Clock (MHz)		Bus Division Factor	Bus Clock (MHz)	
MODCK_H-MODCK[1-3]	Low	High		Low	High		Low	High		Low	High
0101_000	50.0	66.7	5	250.0	333.3	2.5	250.0	333.3	2.5	100.0	133.3
0101_001	50.0	66.7	5	250.0	333.3	3	300.0	400.0	2.5	100.0	133.3
0101_010	50.0	66.7	5	250.0	333.3	3.5	350.0	466.6	2.5	100.0	133.3
0101_011	50.0	66.7	5	250.0	333.3	4	400.0	533.3	2.5	100.0	133.3
0101_100	50.0	66.7	5	250.0	333.3	4.5	450.0	599.9	2.5	100.0	133.3
0101_101	50.0	66.7	5	250.0	333.3	5	500.0	666.6	2.5	100.0	133.3
0101_110	50.0	66.7	5	250.0	333.3	5.5	550.0	733.3	2.5	100.0	133.3
0110_000	Reserved										
0110_001	50.0	66.7	4	200.0	266.6	3	200.0	266.6	3	66.7	88.9
0110_010	50.0	66.7	4	200.0	266.6	3.5	233.3	311.1	3	66.7	88.9
0110_011	50.0	66.7	4	200.0	266.6	4	266.7	355.5	3	66.7	88.9
0110_100	50.0	66.7	4	200.0	266.6	4.5	300.0	400.0	3	66.7	88.9
0111_000	50.0	66.7	3	150.0	200.0	2	150.0	200.0	2	75.0	100.0
0111_001	50.0	66.7	3	150.0	200.0	2.5	187.5	250.0	2	75.0	100.0
0111_010	50.0	66.7	3	150.0	200.0	3	225.0	300.0	2	75.0	100.0
0111_011	50.0	66.7	3	150.0	200.0	3.5	262.5	350.0	2	75.0	100.0
1000_000	Reserved										
1000_001	50.0	66.7	3	150.0	200.0	2.5	150.0	166.7	2.5	60.0	80.0
1000_010	50.0	66.7	3	150.0	200.0	3	180.0	240.0	2.5	60.0	80.0
1000_011	50.0	66.7	3	150.0	200.0	3.5	210.0	280.0	2.5	60.0	80.0
1000_100	50.0	66.7	3	150.0	200.0	4	240.0	320.0	2.5	60.0	80.0
1000_101	50.0	66.7	3	150.0	200.0	4.5	270.0	360.0	2.5	60.0	80.0
1001_000	Reserved										
1001_001	Reserved										
1001_010	Reserved										
1001_011	50.0	66.7	4	200.0	266.6	4	200.0	266.6	4	50.0	66.7
1001_100	50.0	66.7	4	200.0	266.6	4.5	225.0	300.0	4	50.0	66.7

Table 19. Clock Configurations for PCI Agent Mode (PCI_MODCK=0) [1, 2] (continued)

Mode [3]	PCI Clock (MHz)		CPM Multiplication Factor [4]	CPM Clock (MHz)		CPU Multiplication Factor [5]	CPU Clock (MHz)		Bus Division Factor	Bus Clock (MHz)	
MODCK_H-MODCK[1-3]	Low	High		Low	High		Low	High		Low	High
1010_000	Reserved										
1010_001	50.0	66.7	4	200.0	266.6	3	200.0	266.6	3	66.7	88.9
1010_010	50.0	66.7	4	200.0	266.6	3.5	233.3	311.1	3	66.7	88.9
1010_011	50.0	66.7	4	200.0	266.6	4	266.7	355.5	3	66.7	88.9
1010_100	50.0	66.7	4	200.0	266.6	4.5	300.0	400.0	3	66.7	88.9
1011_000	Reserved										
1011_001	50.0	66.7	4	200.0	266.6	2.5	200.0	266.6	2.5	80.0	106.7
1011_010	50.0	66.7	4	200.0	266.6	3	240.0	320.0	2.5	80.0	106.7
1011_011	50.0	66.7	4	200.0	266.6	3.5	280.0	373.3	2.5	80.0	106.7
1011_100	50.0	66.7	4	200.0	266.6	4	320.0	426.6	2.5	80.0	106.7
1100_101	50.0	66.7	6	300.0	400.0	4	400.0	533.3	3	100.0	133.3
1100_110	50.0	66.7	6	300.0	400.0	4.5	450.0	599.9	3	100.0	133.3
1100_111	50.0	66.7	6	300.0	400.0	5	500.0	666.6	3	100.0	133.3
1101_000	50.0	66.7	6	300.0	400.0	5.5	550.0	733.3	3	100.0	133.3
1101_001	50.0	66.7	6	300.0	400.0	3.5	420.0	559.9	2.5	120.0	160.0
1101_010	50.0	66.7	6	300.0	400.0	4	480.0	639.9	2.5	120.0	160.0
1101_011	50.0	66.7	6	300.0	400.0	4.5	540.0	719.9	2.5	120.0	160.0
1101_100	50.0	66.7	6	300.0	400.0	5	600.0	799.9	2.5	120.0	160.0
1110_000	50.0	66.7	5	250.0	333.3	2.5	312.5	416.6	2	125.0	166.7
1110_001	50.0	66.7	5	250.0	333.3	3	375.0	500.0	2	125.0	166.7
1110_010	50.0	66.7	5	250.0	333.3	3.5	437.5	583.3	2	125.0	166.7
1110_011	50.0	66.7	5	250.0	333.3	4	500.0	666.6	2	125.0	166.7
1110_100	50.0	66.7	5	250.0	333.3	4	333.3	444.4	3	83.3	111.1
1110_101	50.0	66.7	5	250.0	333.3	4.5	375.0	500.0	3	83.3	111.1
1110_110	50.0	66.7	5	250.0	333.3	5	416.7	555.5	3	83.3	111.1
1110_111	50.0	66.7	5	250.0	333.3	5.5	458.3	611.1	3	83.3	111.1

Table 19. Clock Configurations for PCI Agent Mode (PCI_MODCK=0) [1, 2] (continued)

Mode [3]	PCI Clock (MHz)		CPM Multiplication Factor [4]	CPM Clock (MHz)		CPU Multiplication Factor [5]	CPU Clock (MHz)		Bus Division Factor	Bus Clock (MHz)	
MODCK_H-MODCK[1-3]	Low	High		Low	High		Low	High		Low	High
1100_000	Reserved										
1100_001	Reserved										
1100_010	Reserved										

1 The “low” values are the minimum allowable frequencies for a given clock mode. The minimum bus frequency in a table entry guarantees only the required minimum CPU operating frequency. The “high” values are for the purpose of illustration only. Users must select a mode and input bus frequency so that the resulting configuration does not violate the frequency rating of the user’s device. The minimum CPM frequency is 120 MHz. Minimum CPU frequency is determined by the clock mode. For modes with a CPU multiplication factor <= 3, the minimum CPU frequency is 150 MHz for commercial temperature devices and 175 MHz for extended temperature devices. For modes with a CPU multiplication factor >= 3.5: for Rev0.1 the minimum CPU frequency is 250 MHz; for RevA or later the minimum CPU frequency is 150 MHz for commercial temperature devices and 175 MHz for extended temperature devices.

2 As shown in Table 15, PCI_MODCK determines the PCI clock frequency range. Refer to Table 20 for lower configurations.

3 MODCK_H = hard reset configuration word [28–31]. MODCK[1-3] = three hardware configuration pins.

4 CPM multiplication factor = CPM clock/PCI clock

5 CPU multiplication factor = Core PLL multiplication factor

Table 20. Clock Configurations for PCI Agent Mode (PCI_MODCK=1) [1, 2]

Mode [3]	PCI Clock (MHz)		CPM Multiplication Factor [4]	CPM Clock (MHz)		CPU Multiplication Factor [5]	CPU Clock (MHz)		Bus Division Factor	Bus Clock (MHz)	
MODCK_H-MODCK[1-3]	Low	High		Low	High		Low	High		Low	High
Default Modes (MODCK_H=0000)											
0000_000	30.0	50.0	4	120.0	200.0	2.5	150.0	250.0	2	60.0	100.0
0000_001	25.0	50.0	4	100.0	200.0	3	150.0	300.0	2	50.0	100.0
0000_010	25.0	50.0	6	150.0	300.0	3	150.0	300.0	3	50.0	100.0
0000_011	25.0	50.0	6	150.0	300.0	4	200.0	400.0	3	50.0	100.0
0000_100	25.0	50.0	6	150.0	300.0	3	180.0	360.0	2.5	60.0	120.0
0000_101	25.0	50.0	6	150.0	300.0	3.5	210.0	420.0	2.5	60.0	120.0
0000_110	25.0	50.0	8	200.0	400.0	3.5	233.3	466.7	3	66.7	133.3
0000_111	25.0	50.0	8	200.0	400.0	3	240.0	480.0	2.5	80.0	160.0
Full Configuration Modes											
0001_001	30.0	50.0	4	120.0	200.0	5	150.0	250.0	4	30.0	50.0
0001_010	25.0	50.0	4	100.0	200.0	6	150.0	300.0	4	25.0	50.0
0001_011	25.0	50.0	4	100.0	200.0	7	175.0	350.0	4	25.0	50.0

Table 20. Clock Configurations for PCI Agent Mode (PCI_MODCK=1) [1, 2] (continued)

Mode [3]	PCI Clock (MHz)		CPM Multiplication Factor [4]	CPM Clock (MHz)		CPU Multiplication Factor [5]	CPU Clock (MHz)		Bus Division Factor	Bus Clock (MHz)	
MODCK_H-MODCK[1-3]	Low	High		Low	High		Low	High		Low	High
0001_100	25.0	50.0	4	100.0	200.0	8	200.0	400.0	4	25.0	50.0
0010_001	25.0	50.0	6	150.0	300.0	3	180.0	360.0	2.5	60.0	120.0
0010_010	25.0	50.0	6	150.0	300.0	3.5	210.0	420.0	2.5	60.0	120.0
0010_011	25.0	50.0	6	150.0	300.0	4	240.0	480.0	2.5	60.0	120.0
0010_100	25.0	50.0	6	150.0	300.0	4.5	270.0	540.0	2.5	60.0	120.0
0011_000	Reserved										
0011_001	37.5	50.0	4	150.0	200.0	3	150.0	200.0	3	50.0	66.7
0011_010	32.1	50.0	4	128.6	200.0	3.5	150.0	233.3	3	42.9	66.7
0011_011	28.1	50.0	4	112.5	200.0	4	150.0	266.7	3	37.5	66.7
0011_100	25.0	50.0	4	100.0	200.0	4.5	150.0	300.0	3	33.3	66.7
0100_000	Reserved										
0100_001	25.0	50.0	6	150.0	300.0	3	150.0	300.0	3	50.0	100.0
0100_010	25.0	50.0	6	150.0	300.0	3.5	175.0	350.0	3	50.0	100.0
0100_011	25.0	50.0	6	150.0	300.0	4	200.0	400.0	3	50.0	100.0
0100_100	25.0	50.0	6	150.0	300.0	4.5	225.0	450.0	3	50.0	100.0
0101_000	30.0	50.0	5	150.0	250.0	2.5	150.0	250.0	2.5	60.0	100.0
0101_001	25.0	50.0	5	125.0	250.0	3	150.0	300.0	2.5	50.0	100.0
0101_010	25.0	50.0	5	125.0	250.0	3.5	175.0	350.0	2.5	50.0	100.0
0101_011	25.0	50.0	5	125.0	250.0	4	200.0	400.0	2.5	50.0	100.0
0101_100	25.0	50.0	5	125.0	250.0	4.5	225.0	450.0	2.5	50.0	100.0
0101_101	25.0	50.0	5	125.0	250.0	5	250.0	500.0	2.5	50.0	100.0
0101_110	25.0	50.0	5	125.0	250.0	5.5	275.0	550.0	2.5	50.0	100.0
0110_000	Reserved										
0110_001	25.0	50.0	8	200.0	400.0	3	200.0	400.0	3	66.7	133.3
0110_010	25.0	50.0	8	200.0	400.0	3.5	233.3	466.7	3	66.7	133.3
0110_011	25.0	50.0	8	200.0	400.0	4	266.7	533.3	3	66.7	133.3
0110_100	25.0	50.0	8	200.0	400.0	4.5	300.0	600.0	3	66.7	133.3

Table 20. Clock Configurations for PCI Agent Mode (PCI_MODCK=1) [1, 2] (continued)

Mode [3]	PCI Clock (MHz)		CPM Multiplication Factor [4]	CPM Clock (MHz)		CPU Multiplication Factor [5]	CPU Clock (MHz)		Bus Division Factor	Bus Clock (MHz)	
MODCK_H-MODCK[1-3]	Low	High		Low	High		Low	High		Low	High
0111_000	25.0	50.0	6	150.0	300.0	2	150.0	300.0	2	75.0	150.0
0111_001	25.0	50.0	6	150.0	300.0	2.5	187.5	375.0	2	75.0	150.0
0111_010	25.0	50.0	6	150.0	300.0	3	225.0	450.0	2	75.0	150.0
0111_011	25.0	50.0	6	150.0	300.0	3.5	262.5	525.0	2	75.0	150.0
1000_000	Reserved										
1000_001	25.0	50.0	6	150.0	300.0	2.5	150.0	300.0	2.5	60.0	120.0
1000_010	25.0	50.0	6	150.0	300.0	3	180.0	360.0	2.5	60.0	120.0
1000_011	25.0	50.0	6	150.0	300.0	3.5	210.0	420.0	2.5	60.0	120.0
1000_100	25.0	50.0	6	150.0	300.0	4	240.0	480.0	2.5	60.0	120.0
1000_101	25.0	50.0	6	150.0	300.0	4.5	270.0	540.0	2.5	60.0	120.0
1001_000	Reserved										
1001_001	Reserved										
1001_010	Reserved										
1001_011	25.0	50.0	8	200.0	400.0	4	200.0	400.0	4	50.0	100.0
1001_100	25.0	50.0	8	200.0	400.0	4.5	225.0	450.0	4	50.0	100.0
1010_000	Reserved										
1010_001	25.0	50.0	8	200.0	400.0	3	200.0	400.0	3	66.7	133.3
1010_010	25.0	50.0	8	200.0	400.0	3.5	233.3	466.7	3	66.7	133.3
1010_011	25.0	50.0	8	200.0	400.0	4	266.7	533.3	3	66.7	133.3
1010_100	25.0	50.0	8	200.0	400.0	4.5	300.0	600.0	3	66.7	133.3
1011_000	Reserved										
1011_001	25.0	50.0	8	200.0	400.0	2.5	200.0	400.0	2.5	80.0	160.0
1011_010	25.0	50.0	8	200.0	400.0	3	240.0	480.0	2.5	80.0	160.0
1011_011	25.0	50.0	8	200.0	400.0	3.5	280.0	560.0	2.5	80.0	160.0
1011_100	25.0	50.0	8	200.0	400.0	4	320.0	640.0	2.5	80.0	160.0
1100_101	25.0	50.0	6	150.0	300.0	4	200.0	400.0	3	50.0	100.0

Table 20. Clock Configurations for PCI Agent Mode (PCI_MODCK=1) [1, 2] (continued)

Mode [3]	PCI Clock (MHz)		CPM Multiplication Factor [4]	CPM Clock (MHz)		CPU Multiplication Factor [5]	CPU Clock (MHz)		Bus Division Factor	Bus Clock (MHz)	
MODCK_H-MODCK[1-3]	Low	High		Low	High		Low	High		Low	High
1100_110	25.0	50.0	6	150.0	300.0	4.5	225.0	450.0	3	50.0	100.0
1100_111	25.0	50.0	6	150.0	300.0	5	250.0	500.0	3	50.0	100.0
1101_000	25.0	50.0	6	150.0	300.0	5.5	275.0	550.0	3	50.0	100.0
1101_001	25.0	50.0	6	150.0	300.0	3.5	210.0	420.0	2.5	60.0	120.0
1101_010	25.0	50.0	6	150.0	300.0	4	240.0	480.0	2.5	60.0	120.0
1101_011	25.0	50.0	6	150.0	300.0	4.5	270.0	540.0	2.5	60.0	120.0
1101_100	25.0	50.0	6	150.0	300.0	5	300.0	600.0	2.5	60.0	120.0
1110_000	25.0	50.0	5	125.0	250.0	2.5	156.3	312.5	2	62.5	125.0
1110_001	25.0	50.0	5	125.0	250.0	3	187.5	375.0	2	62.5	125.0
1110_010	25.0	50.0	5	125.0	250.0	3.5	218.8	437.5	2	62.5	125.0
1110_011	25.0	50.0	5	125.0	250.0	4	250.0	500.0	2	62.5	125.0
1110_100	25.0	50.0	5	125.0	250.0	4	166.7	333.3	3	41.7	83.3
1110_101	25.0	50.0	5	125.0	250.0	4.5	187.5	375.0	3	41.7	83.3
1110_110	25.0	50.0	5	125.0	250.0	5	208.3	416.7	3	41.7	83.3
1110_111	25.0	50.0	5	125.0	250.0	5.5	229.2	458.3	3	41.7	83.3
1100_000	Reserved										
1100_001	Reserved										
1100_010	Reserved										

1 The “low” values are the minimum allowable frequencies for a given clock mode. The minimum bus frequency in a table entry guarantees only the required minimum CPU operating frequency. The “high” values are for the purpose of illustration only. Users must select a mode and input bus frequency so that the resulting configuration does not violate the frequency rating of the user’s device. The minimum CPM frequency is 120 MHz. Minimum CPU frequency is determined by the clock mode. For modes with a CPU multiplication factor <= 3, the minimum CPU frequency is 150 MHz for commercial temperature devices and 175 MHz for extended temperature devices. For modes with a CPU multiplication factor >= 3.5: for Rev0.1 the minimum CPU frequency is 250 MHz; for RevA or later the minimum CPU frequency is 150 MHz for commercial temperature devices and 175 MHz for extended temperature devices.

2 As shown in Table 15, PCI_MODCK determines the PCI clock range. Refer to Table 19 for higher range configurations.

3 MODCK_H = hard reset configuration word [28–31]. MODCK[1-3] = three hardware configuration pins.

4 CPM multiplication factor = CPM clock/PCI clock

5 CPU multiplication factor = Core PLL multiplication factor

8 Pinout

This section provides the pin assignments and pinout lists for both HiP7 PowerQUICC II packages.

8.1 ZU Package—MPC8280 and MPC8270

The following figures and table represent the standard 480 TBGA package. For information on the alternate package, refer to Section 8.2, “VR and ZQ Packages—MPC8275 and MPC8270,” on page -58.

Figure 13 shows the pinout of the ZU package as viewed from the top surface.

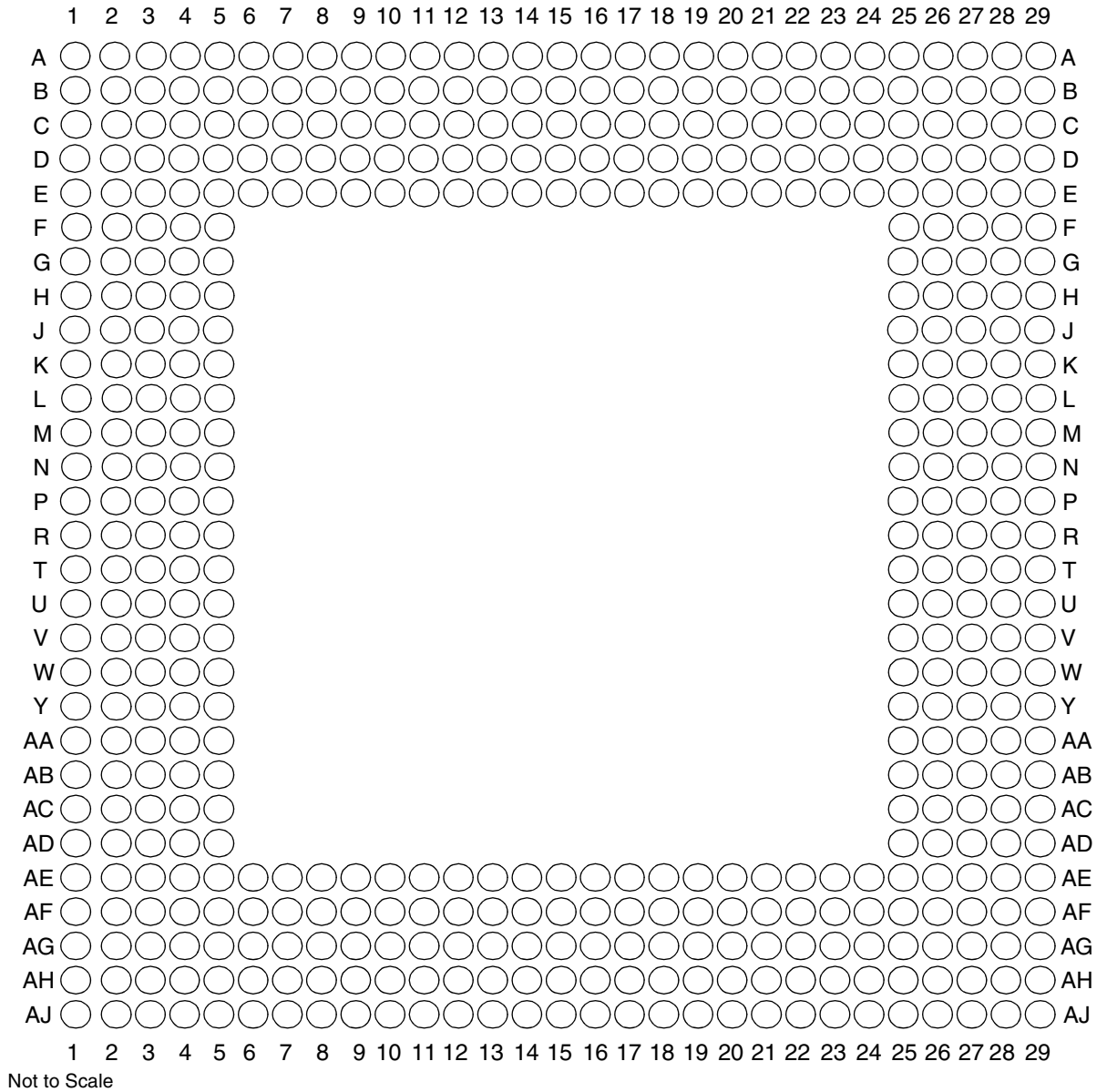

Figure 13. Pinout of the 480 TBGA Package (View from Top)

Figure 14 shows the side profile of the TBGA package to indicate the direction of the top surface view.

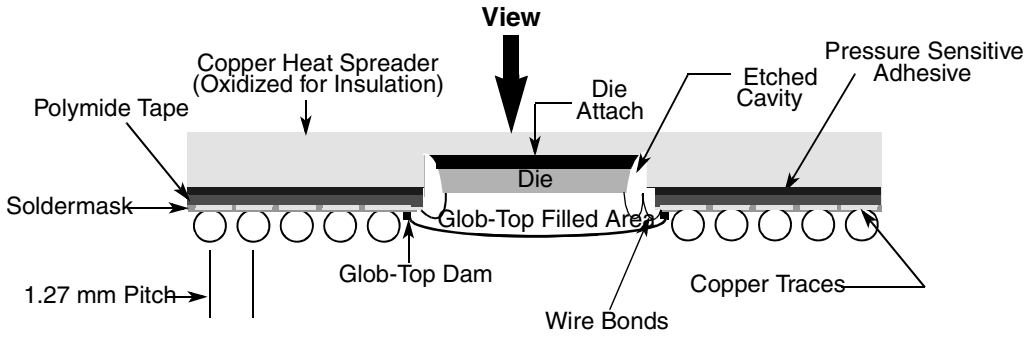

Figure 14. Side View of the TBGA Package

Table 21 shows the pinout list of the MPC8280 and MPC8270. Table 22 defines conventions and acronyms used in Table 21.

Table 21. MPC8280 and MPC8270 (ZU Package) Pinout List

Pin Name		Ball
MPC8280/MPC8270	MPC8280 only	
$\overline{BR}$		W5
$\overline{BG}$		F4
$\overline{ABB}/\overline{IRQ2}$		E2
$\overline{TS}$		E3
A0		G1
A1		H5
A2		H2
A3		H1
A4		J5
A5		J4
A6		J3
A7		J2
A8		J1
A9		K4
A10		K3
A11		K2
A12		K1
A13		L5
A14		L4
A15		L3
A16		L2

Table 21. MPC8280 and MPC8270 (ZU Package) Pinout List (continued)

Pin Name		Ball
MPC8280/MPC8270	MPC8280 only	
A17		L1
A18		M5
A19		N5
A20		N4
A21		N3
A22		N2
A23		N1
A24		P4
A25		P3
A26		P2
A27		P1
A28		R1
A29		R3
A30		R5
A31		R4
TT0		F1
TT1		G4
TT2		G3
TT3		G2
TT4		F2
$\overline{\text{TBST}}$		D3
TSIZ0		C1
TSIZ1		E4
TSIZ2		D2
TSIZ3		F5
$\overline{\text{AACK}}$		F3
$\overline{\text{ARTRY}}$		E1
$\overline{\text{DBG}}$		V1
$\overline{\text{DBB}}$/$\overline{\text{IRQ3}}$		V2
D0		B20
D1		A18
D2		A16
D3		A13

Table 21. MPC8280 and MPC8270 (ZU Package) Pinout List (continued)

Pin Name		Ball
MPC8280/MPC8270	MPC8280 only	
D4		E12
D5		D9
D6		A6
D7		B5
D8		A20
D9		E17
D10		B15
D11		B13
D12		A11
D13		E9
D14		B7
D15		B4
D16		D19
D17		D17
D18		D15
D19		C13
D20		B11
D21		A8
D22		A5
D23		C5
D24		C19
D25		C17
D26		C15
D27		D13
D28		C11
D29		B8
D30		A4
D31		E6
D32		E18
D33		B17
D34		A15
D35		A12
D36		D11

Table 21. MPC8280 and MPC8270 (ZU Package) Pinout List (continued)

Pin Name		Ball
MPC8280/MPC8270	MPC8280 only	
D37		C8
D38		E7
D39		A3
D40		D18
D41		A17
D42		A14
D43		B12
D44		A10
D45		D8
D46		B6
D47		C4
D48		C18
D49		E16
D50		B14
D51		C12
D52		B10
D53		A7
D54		C6
D55		D5
D56		B18
D57		B16
D58		E14
D59		D12
D60		C10
D61		E8
D62		D6
D63		C2
DP0/$\overline{\text{RSRV}}$/$\overline{\text{EXT_BR2}}$		B22
$\overline{\text{IRQ1}}$/DP1/$\overline{\text{EXT_BG2}}$		A22
$\overline{\text{IRQ2}}$/DP2/$\overline{\text{TLBISYNC}}$/$\overline{\text{EXT_DBG2}}$		E21
$\overline{\text{IRQ3}}$/DP3/$\overline{\text{CKSTP_OUT}}$/$\overline{\text{EXT_BR3}}$		D21
$\overline{\text{IRQ4}}$/DP4/$\overline{\text{CORE_SRESET}}$/$\overline{\text{EXT_BG3}}$		C21
$\overline{\text{IRQ5}}$/$\overline{\text{CINT}}$/DP5/$\overline{\text{TBEN}}$/$\overline{\text{EXT_DBG3}}$		B21

Table 21. MPC8280 and MPC8270 (ZU Package) Pinout List (continued)

Pin Name		Ball
MPC8280/MPC8270	MPC8280 only	
IRQ6/DP6/CSE0		A21
IRQ7/DP7/CSE1		E20
PSDVAL		V3
TA		C22
TEA		V5
GBL/IRQ1		W1
CI/BADDR29/IRQ2		U2
WT/BADDR30/IRQ3		U3
L2_HIT/IRQ4		Y4
CPU_BG/BADDR31/IRQ5/CINT		U4
CPU_DBG		R2
CPU_BR		Y3
CS0		F25
CS1		C29
CS2		E27
CS3		E28
CS4		F26
CS5		F27
CS6		F28
CS7		G25
CS8		D29
CS9		E29
CS10/BCTL1		F29
CS11/AP0		G28
BADDR27		T5
BADDR28		U1
ALE		T2
BCTL0		A27
PWE0/PSDDQM0/PBS0		C25
PWE1/PSDDQM1/PBS1		E24
PWE2/PSDDQM2/PBS2		D24
PWE3/PSDDQM3/PBS3		C24
PWE4/PSDDQM4/PBS4		B26

Table 21. MPC8280 and MPC8270 (ZU Package) Pinout List (continued)

Pin Name		Ball
MPC8280/MPC8270	MPC8280 only	
PWE5/PSDDQM5/PBS5		A26
PWE6/PSDDQM6/PBS6		B25
PWE7/PSDDQM7/PBS7		A25
PSDA10/PGPL0		E23
PSDWE/PGPL1		B24
POE/PSDRAS/PGPL2		A24
PSDCAS/PGPL3		B23
PGTA/PUPMWAIT/PGPL4/PPBS		A23
PSDAMUX/PGPL5		D22
LWE0/LSDDQM0/LBS0/PCI_CFG0		H28
LWE1/LSDDQM1/LBS1/PCI_CFG1		H27
LWE2/LSDDQM2/LBS2/PCI_CFG2		H26
LWE3/LSDDQM3/LBS3/PCI_CFG3		G29
LSDA10/LGPL0/PCI_MODCKH0		D27
LSDWE/LGPL1/PCI_MODCKH1		C28
LOE/LSDRAS/LGPL2/PCI_MODCKH2		E26
LSDCAS/LGPL3/PCI_MODCKH3		D25
LGTA/LUPMWAIT/LGPL4/LPBS		C26
LGPL5/LSDAMUX/PCI_MODCK		B27
LWR		D28
L_A14/PAR		N27
L_A15/FRAME/SMI		T29
L_A16/TRDY		R27
L_A17/IRDY/CKSTP_OUT		R26
L_A18/STOP		R29
L_A19/DEVSEL		R28
L_A20/IDSEL		W29
L_A21/PERR		P28
L_A22/SERR		N26
L_A23/REQ0		AA27
L_A24/REQ1/HSEJSW		P29
L_A25/GNT0		AA26
L_A26/GNT1/HSLED		N25

Table 21. MPC8280 and MPC8270 (ZU Package) Pinout List (continued)

Pin Name		Ball
MPC8280/MPC8270	MPC8280 only	
L_A27/GNT2/HSENUM		AA25
L_A28/RST/CORE_SRESET		AB29
L_A29/INTA		AB28
L_A30/REQ2		P25
L_A31/DLLOUT		AB27
LCL_D0/AD0		H29
LCL_D1/AD1		J29
LCL_D2/AD2		J28
LCL_D3/AD3		J27
LCL_D4/AD4		J26
LCL_D5/AD5		J25
LCL_D6/AD6		K25
LCL_D7/AD7		L29
LCL_D8/AD8		L27
LCL_D9/AD9		L26
LCL_D10/AD10		L25
LCL_D11/AD11		M29
LCL_D12/AD12		M28
LCL_D13/AD13		M27
LCL_D14/AD14		M26
LCL_D15/AD15		N29
LCL_D16/AD16		T25
LCL_D17/AD17		U27
LCL_D18/AD18		U26
LCL_D19/AD19		U25
LCL_D20/AD20		V29
LCL_D21/AD21		V28
LCL_D22/AD22		V27
LCL_D23/AD23		V26
LCL_D24/AD24		W27
LCL_D25/AD25		W26
LCL_D26/AD26		W25
LCL_D27/AD27		Y29

Table 21. MPC8280 and MPC8270 (ZU Package) Pinout List (continued)

Pin Name		Ball
MPC8280/MPC8270	MPC8280 only	
LCL_D28/AD28		Y28
LCL_D29/AD29		Y25
LCL_D30/AD30		AA29
LCL_D31/AD31		AA28
LCL_DP0/C0/$\overline{\text{BE0}}$		L28
LCL_DP1/C1/$\overline{\text{BE1}}$		N28
LCL_DP2/C2/$\overline{\text{BE2}}$		T28
LCL_DP3/C3/$\overline{\text{BE3}}$		W28
$\overline{\text{IRQ0}}$/$\overline{\text{NMI_OUT}}$		T1
$\overline{\text{IRQ7}}$/$\overline{\text{INT_OUT}}$/$\overline{\text{APE}}$		D1
$\overline{\text{TRST}}$ [1]		AH3
TCK		AG5
TMS		AJ3
TDI		AE6
TDO		AF5
TRIS		AB4
$\overline{\text{PORESET}}$[1]		AG6
$\overline{\text{HRESET}}$		AH5
$\overline{\text{SRESET}}$		AF6
$\overline{\text{QREQ}}$		AA3
$\overline{\text{RSTCONF}}$		AJ4
MODCK1/AP1/TC0/BNKSEL0		W2
MODCK2/AP2/TC1/BNKSEL1		W3
MODCK3/AP3/TC2/BNKSEL2		W4
CLKIN1		AH4
PA0/$\overline{\text{RESTART1}}$/DREQ3	FCC2_UTM_TXADDR2	AC29 [2]
PA1/$\overline{\text{REJECT1}}$/$\overline{\text{DONE3}}$	FCC2_UTM_TXADDR1	AC25[2]
PA2/CLK20/$\overline{\text{DACK3}}$	FCC2_UTM_TXADDR0	AE28[2]
PA3/CLK19/$\overline{\text{DACK4}}$/L1RXD1A2	FCC2_UTM_RXADDR0	AG29[2]
PA4/$\overline{\text{REJECT2}}$/$\overline{\text{DONE4}}$	FCC2_UTM_RXADDR1	AG28[2]
PA5/$\overline{\text{RESTART2}}$/DREQ4	FCC2_UTM_RXADDR2/FCC1_UT_RX PRTY	AG26[2]
PA6/FCC2_RXADDR3	L1RSYNCA1	AE24[2]
PA7/SMSYN2/FCC2_TXADDR3	L1TSYNCA1/L1GNTA1	AH25[2]

Table 21. MPC8280 and MPC8270 (ZU Package) Pinout List (continued)

Pin Name		Ball
MPC8280/MPC8270	MPC8280 only	
PA8/SMRXD2/FCC2_TXADDR4	L1RXD0A1/L1RXDA1	AF23[2]
PA9/SMTXD2	L1TXD0A1	AH23[2]
PA10/MSNUM5	FCC1_UT8_RXD0/FCC1_UT16_RXD8	AE22[2]
PA11/MSNUM4	FCC1_UT8_RXD1/FCC1_UT16_RXD9	AH22[2]
PA12/MSNUM3	FCC1_UT8_RXD2/ FCC1_UT16_RXD10	AJ21[2]
PA13/MSNUM2	FCC1_UT8_RXD3/ FCC1_UT16_RXD11	AH20[2]
PA14/FCC1_MII_HDLC_RXD3	FCC1_UT8_RXD4/ FCC1_UT16_RXD12	AG19[2]
PA15/FCC1_MII_HDLC_RXD2	FCC1_UT8_RXD5/ FCC1_UT16_RXD13	AF18[2]
PA16/FCC1_MII_HDLC_RXD1/ FCCI_RMII_RXD1	FCC1_UT8_RXD6/ FCC1_UT16_RXD14	AF17[2]
PA17/FCC1_MII_HDLC_RXD0/ FCC1_MII_TRAN_RXD/ FCCI_RMII_RXD0	FCC1_UT8_RXD7/ FCC1_UT16_RXD15	AE16[2]
PA18/FCC1_MII_HDLC_TXD0/ FCC1_MII_TRAN_TXD/ FCC1_RMII_TXD0	FCC1_UT8_TXD7/FCC1_UT16_TXD15	AJ16[2]
PA19/FCC1_MII_HDLC_TXD1/ FCC1_RMII_TXD1	FCC1_UT8_TXD6/FCC1_UT16_TXD14	AG15[2]
PA20/FCC1_MII_HDLC_TXD2	FCC1_UT8_TXD5/FCC1_UT16_TXD13	AJ13[2]
PA21/FCC1_MII_HDLC_TXD3	FCC1_UT8_TXD4/FCC1_UT16_TXD12	AE13[2]
PA22	FCC1_UT8_TXD3/FCC1_UT16_TXD11	AF12[2]
PA23	FCC1_UT8_TXD2/FCC1_UT16_TXD10	AG11[2]
PA24/MSNUM1	FCC1_UT8_TXD1/FCC1_UT16_TXD9	AH9[2]
PA25/MSNUM0	FCC1_UT8_TXD0/FCC1_UT16_TXD8	AJ8[2]
PA26/FCC1_RMII_RX_ER	FCC1_UTM_RXCLAV/ FCC1_UTS_RXCLAV	AH7[2]
PA27/FCC1_MII_RX_DV/ FCC1_RMII_CRS_DV	FCC1_UT_RXSOC	AF7[2]
PA28/FCC1_MII_TX_EN/ FCC1_RMII_TX_EN	$\overline{\text{FCC1_UTM_RXENB}}$/ $\overline{\text{FCC1_UTS_RXENB}}$	AD5[2]
PA29/FCC1_MII_TX_ER	FCC1_UT_TXSOC	AF1[2]
PA30/FCC1_MII_CRS/$\overline{\text{FCC1_RTS}}$	FCC1_UTM_TXCLAV/ FCC1_UTS_TXCLAV	AD3[2]
PA31/FCC1_MII_COL	$\overline{\text{FCC1_UTM_TXENB}}$/ $\overline{\text{FCC1_UTS_TXENB}}$	AB5[2]

Table 21. MPC8280 and MPC8270 (ZU Package) Pinout List (continued)

Pin Name		Ball
MPC8280/MPC8270	MPC8280 only	
PB4/FCC3_MII_HDLC_TXD3/ L1RSYNCA2/FCC3_RTS	FCC2_UT8_RXD0	AD28[2]
PB5/FCC3_MII_HDLC_TXD2/ L1TSYNCA2/L1GNTA2	FCC2_UT8_RXD1	AD26[2]
PB6/FCC3_MII_HDLC_TXD1/ FCC3_RMII_TXD1/ L1RXDA2/L1RXD0A2	FCC2_UT8_RXD2	AD25[2]
PB7/FCC3_MII_HDLC_TXD0/ FCC3_RMII_TXD0/ FCC3_TXD/L1TXDA2/L1TXD0A2	FCC2_UT8_RXD3	AE26[2]
PB8/FCC3_MII_HDLC_RXD0/ FCC3_RMII_RXD0/ FCC3_RXD/TXD3	FCC2_UT8_TXD3/L1RSYNCD1	AH27[2]
PB9/FCC3_MII_HDLC_RXD1/ FCC3_RMII_RXD1/L1TXD2A2	FCC2_UT8_TXD2/L1TSYNCD1/ L1GNTD1	AG24[2]
PB10/FCC3_MII_HDLC_RXD2	FCC2_UT8_TXD1/L1RXDD1	AH24[2]
PB11/FCC3_MII_HDLC_RXD3	FCC2_UT8_TXD0/L1TXDD1	AJ24[2]
PB12/FCC3_MII_CRS/TXD2	L1CLKOB1/L1RSYNCC1	AG22[2]
PB13/FCC3_MII_COL/L1TXD1A2	L1RQB1/L1TSYNCC1/L1GNTC1	AH21[2]
PB14/FCC3_MII_RMII_TX_EN//RXD3	L1RXDC1	AG20[2]
PB15/FCC3_MII_TX_ER/RXD2	L1TXDC1	AF19[2]
PB16/FCC3_MII_RMII_RX_ER/CLK18	L1CLKOA1	AJ18[2]
PB17/FCC3_MII_RX_DV/CLK17/ FCC3_RMII_CRS_DV	L1RQA1	AJ17[2]
PB18/FCC2_MII_HDLC_RXD3/ L1CLKOD2/L1RXD2A2	FCC2_UT8_RXD4	AE14[2]
PB19FCC2_MII_HDLC_RXD2/ L1RQD2/L1RXD3A2	FCC2_UT8_RXD5	AF13[2]
PB20/FCC2_MII_HDLC_RMII_RXD1/ L1RSYNCD2	FCC2_UT8_RXD6/L1TXD1A1	AG12[2]
PB21//FCC2_MII_HDLC_RMII_RXD0/ FCC2_TRAN_RXD/L1TSYNCD2/ L1GNTD2	FCC2_UT8_RXD7/L1TXD2A1	AH11[2]
PB22/FCC2_MII_HDLC_TXD0/ FCC2_TXD/FCC2_RMII_TXD0/ L1RXDD2	FCC2_UT8_TXD7/L1RXD1A1	AH16[2]
PB23/FCC2_MII_HDLC_TXD1/ L1RXD2A1/L1TXDD2/ FCC2_RMII_TXD1	FCC2_UT8_TXD6/L1RXD2A1	AE15[2]
PB24/FCC2_MII_HDLC_TXD2/ L1RSYNCC2	FCC2_UT8_TXD5/L1RXD3A1	AJ9[2]

Table 21. MPC8280 and MPC8270 (ZU Package) Pinout List (continued)

Pin Name		Ball
MPC8280/MPC8270	MPC8280 only	
PB25/FCC2_MII_HDLC_TXD3/ L1TSYNCC2/L1GNTC2	FCC2_UT8_TXD4/L1TXD3A1	AE9[2]
PB26/FCC2_MII_CRS/L1RXDC2	FCC2_UT8_TXD1	AJ7[2]
PB27/FCC2_MII_COL/L1TXDC2	FCC2_UT8_TXD0	AH6[2]
PB28/FCC2_MII_RX_ER/ FCC2_RMII_RX_ER/FCC2_RTS/ L1TSYNCB2/L1GNTB2/TXD1		AE3[2]
PB29/L1RSYNCB2/FCC2_MII_TX_EN/ FCC2_RMII_TX_EN	FCC2_UTM_RXCLAV/ FCC2_UTS_RXCLAV	AE2[2]
PB30/FCC2_MII_RX_DV/ FCC2_RMII_CRS_DV/L1RXDB2	FCC2_UT_TXSOC	AC5[2]
PB31/FCC2_MII_TX_ER/L1TXDB2	FCC2_UT_RXSOC	AC4[2]
PC0/DREQ1/BRGO7/SMSYN2/ L1CLKOA2		AB26[2]
PC1/DREQ2/BRGO6/L1RQA2/ SPISEL		AD29[2]
PC2/FCC3_CD/DONE2	FCC2_UT8_TXD3	AE29[2]
PC3/FCC3_CTS/DACK2/CTS4/ USB_RP	FCC2_UT8_TXD2	AE27[2]
PC4/SI2_L1ST4/FCC2_CD	FCC2_UTM_RXENB/ FCC2_UTS_RXENB	AF27[2]
PC5/SI2_L1ST3/FCC2_CTS	FCC2_UTM_TXCLAV/ FCC2_UTS_TXCLAV	AF24[2]
PC6/FCC1_CD	L1CLKOC1/FCC1_UTM_RXADDR2/ FCC1_UTS_RXADDR2/ FCC1_UTM_RXCLAV1	AJ26[2]
PC7/FCC1_CTS	L1RQC1/FCC1_UTM_TXADDR2/ FCC1_UTS_TXADDR2/ FCC1_UTM_TXCLAV1	AJ25[2]
PC8/CD4/RENA4/SI2_L1ST2/CTS3/ USBRN	FCC1_UT16_TXD0	AF22[2]
PC9/CTS4/CLSN4/SI2_L1ST1/ L1TSYNCA2/L1GNTA2/USB_RP	FCC1_UT16_TXD1	AE21[2]
PC10/CD3/RENA3	FCC1_UT16_TXD2/SI1_L1ST4/ FCC2_UT8_RXD3	AF20[2]
PC11/CTS3/CLSN3/L1TXD3A2	L1CLKOD1/FCC2_UT8_RXD2	AE19[2]
PC12/CD2/RENA2	SI1_L1ST3/FCC1_UTM_RXADDR1/ FCC1_UTS_RXADDR1	AE18[2]
PC13/CTS2/CLSN2	L1RQD1/FCC1_UTM_TXADDR1/ FCC1_UTS_TXADDR1	AH18[2]

Table 21. MPC8280 and MPC8270 (ZU Package) Pinout List (continued)

Pin Name		Ball
MPC8280/MPC8270	MPC8280 only	
PC14/$\overline{\text{CD1}}$/RENA1	FCC1_UTM_RXADDR0/ FCC1_UTS_RXADDR0	AH17[2]
PC15/$\overline{\text{CTS1}}$/CLSN1/SMTXD2	FCC1_UTM_TXADDR0/ FCC1_UTS_TXADDR0	AG16[2]
PC16/CLK16/TIN4		AF15[2]
PC17/CLK15/TIN3/BRGO8		AJ15[2]
PC18/CLK14/$\overline{\text{TGATE2}}$		AH14[2]
PC19/CLK13/BRGO7/SPICLK		AG13[2]
PC20/CLK12/$\overline{\text{TGATE1}}$/USB_OE		AH12[2]
PC21/CLK11/BRGO6		AJ11[2]
PC22/CLK10/$\overline{\text{DONE1}}$/FCC1_UT_TXPRTY		AG10[2]
PC23/CLK9/BRGO5/$\overline{\text{DACK1}}$		AE10[2]
PC24/CLK8/$\overline{\text{TOUT4}}$	FCC2_UT8_TXD3	AF9[2]
PC25/CLK7/BRGO4	FCC2_UT8_TXD2	AE8[2]
PC26/CLK6/$\overline{\text{TOUT3}}$/TMCLK		AJ6[2]
PC27/FCC3_TXD/FCC3_MII_TXD0/ FCC3_RMII_TXD0/CLK5/BRGO3		AG2[2]
PC28/CLK4/TIN1/$\overline{\text{TOUT2}}$/$\overline{\text{CTS2}}$/CLSN2/ FCC2_RXADDR4		AF3[2]
PC29/CLK3/TIN2/BRGO2/$\overline{\text{CTS1}}$/CLSN1		AF2[2]
PC30/CLK2/$\overline{\text{TOUT1}}$	FCC2_UT8_TXD3	AE1[2]
PC31/CLK1/BRGO1		AD1[2]
PD4/BRGO8/$\overline{\text{FCC3_RTS}}$/SMRXD2	L1TSYNCD1/L1GNTD1	AC28[2]
PD5/$\overline{\text{DONE1}}$	FCC1_UT16_TXD3	AD27[2]
PD6/$\overline{\text{DACK1}}$	FCC1_UT16_TXD4	AF29[2]
PD7/SMSYN1/FCC1_TXCLAV2	FCC1_UTM_TXADDR3/ FCC1_UTS_TXADDR3/ FCC2_UTM_TXADDR4 FCC2_UTS_TXADDR1	AF28[2]
PD8/SMRXD1/BRGO5	FCC2_UT_TXPRTY	AG25[2]
PD9/SMTXD1/BRGO3	FCC2_UT_RXPRTY	AH26[2]
PD10/L1CLKOB2/BRGO4	FCC2_UT8_RXD1/L1RSYNCB1	AJ27[2]
PD11/$\overline{\text{L1RQB2}}$	FCC2_UT8_RXD0/L1TSYNCB1/ L1GNTB1	AJ23[2]
PD12	SI1_L1ST2/L1RXDB1	AG23[2]
PD13	SI1_L1ST1/L1TXDB1	AJ22[2]

Table 21. MPC8280 and MPC8270 (ZU Package) Pinout List (continued)

Pin Name		Ball
MPC8280/MPC8270	MPC8280 only	
PD14/L1CLKOC2/I2CSCL	FCC1_UT16_RXD0	AE20[2]
PD15/$\overline{\text{L1RQC2}}$/I2CSDA	FCC1_UT16_RXD1	AJ20[2]
PD16/SPIMISO	FCC1_UT_TXPRTY/L1TSYNCC1/ L1GNTC1	AG18[2]
PD17/BRGO2/SPIMOSI	FCC1_UT_RXPRTY	AG17[2]
PD18/SPICLK	FCC1_UTM_RXADDR4/ FCC1_UTS_RXADDR4/ FCC1_UTM_RXCLAV3/ FCC2_UTM_RXADDR3/ FCC2_UTS_RXADDR0	AF16[2]
PD19/SPISEL/BRGO1	FCC1_UTM_TXADDR4/ FCC1_UTS_TXADDR4/ FCC1_UTM_TXCLAV3/ FCC2_UTM_TXADDR3/ FCC2_UTS_TXADDR0	AH15[2]
PD20/$\overline{\text{RTS4}}$/TENA4/L1RSYNCA2/ USB_TP	FCC1_UT16_RXD2	AJ14[2]
PD21/TXD4/L1RXD0A2/L1RXDA2/ USB_TN	FCC1_UT16_RXD3	AH13[2]
PD22/RXD4L1TXD0A2/L1TXDA2/ USB_RXD	FCC1_UT16_TXD5	AJ12[2]
PD23/$\overline{\text{RTS3}}$/TENA3	FCC1_UT16_RXD4/L1RSYNCD1	AE12[2]
PD24/TXD3	FCC1_UT16_RXD5/L1RXDD1	AF10[2]
PD25/RXD3	FCC1_UT16_TXD6/L1TXDD1	AG9[2]
PD26/$\overline{\text{RTS2}}$/TENA2	FCC1_UT16_RXD6/L1RSYNCC1	AH8[2]
PD27/TXD2	FCC1_UT16_RXD7/L1RXDC1	AG7[2]
PD28/RXD2	FCC1_UT16_TXD7/L1TXDC1	AE4[2]
PD29/$\overline{\text{RTS1}}$/TENA1	FCC1_UTM_RXADDR3/ FCC1_UTS_RXADDR3/ FCC1_UTM_RXCLAV2/ FCC2_UTM_RXADDR4/ FCC2_UTS_RXADDR1	AG1[2]
PD30/TXD1	$\overline{\text{FCC2_UTM_TXENB}}$/ $\overline{\text{FCC2_UTS_TXENB}}$	AD4[2]
PD31/RXD1		AD2[2]
VCCSYN		AB3
VCCSYN1		B9
CLKIN2		AE11
SPARE4 [3]		U5

Table 21. MPC8280 and MPC8270 (ZU Package) Pinout List (continued)

Pin Name		Ball
MPC8280/MPC8270	MPC8280 only	
PCI_MODE [4]		AF25
SPARE6[3]		V4
No connect [5]		AA1, AG4
I/O power		AG21, AG14, AG8, AJ1, AJ2, AH1, AH2, AG3, AF4, AE5, AC27, Y27, T27, P27, K26, G27, AE25, AF26, AG27, AH28, AH29, AJ28, AJ29, C7, C14, C16, C20, C23, E10, A28, A29, B28, B29, C27, D26, E25, H3, M4, T3, AA4, A1, A2, B1, B2, C3, D4, E5
Core power		U28, U29, K28, K29, A9, A19, B19, M1, M2, Y1, Y2, AC1, AC2, AH19, AJ19, AH10, AJ10, AJ5
Ground		AA5, AB1 [6], AB2 [7], AF21, AF14, AF8, AE7, AF11, AE17, AE23, AC26, AB25, Y26, V25, T26, R25, P26, M25, K27, H25, G26, D7, D10, D14, D16, D20, D23, C9, E11, E13, E15, E19, E22, B3, G5, H4, K5, M3, P5, T4, Y5, AA2, AC3

1 Should be tied to VDDH via a 2K Ω external pull-up resistor.

2 The default configuration of the CPM pins (PA[0–31], PB[4–31], PC[0–31], PD[4–31]) is input. To prevent excessive DC current, it is recommended to either pull unused pins to GND or VDDH, or to configure them as outputs.

3 Must be pulled down or left floating.

4 If PCI is not desired, must be pulled up or left floating.

5 Sphere is not connected to die.

6 GNDSYN (AB1): This pin exists as a separate ground signal in MPC826x(A) devices; it does not exist as a separate ground signal on the MPC8280. New designs must connect AB1 to GND and follow the suggestions in Section 4.6, “Layout Practices.” Old designs in which the MPC8280 is used as a drop-in replacement can leave the pin connected to GND with the noise filtering capacitors.

7 XFC (AB2) pin: This pin is used in MPC826x(A) devices; it is not used in MPC8280 because there is no need for external capacitor to operate the PLL. New designs should connect AB2 (XFC) pin to GND. Old designs in which the MPC8280 is used as a drop-in replacement can leave the pin connected to the current capacitor.

Symbols used in Table 21 are described in Table 22.

Table 22. Symbol Legend

Symbol	Meaning
$\overline{\text{OVERBAR}}$	Signals with overbars, such as $\overline{\text{TA}}$, are active low.
UTM	Indicates that a signal is part of the UTOPIA master interface.
UTS	Indicates that a signal is part of the UTOPIA slave interface.

Table 22. Symbol Legend (continued)

Symbol	Meaning
UT8	Indicates that a signal is part of the 8-bit UTOPIA interface.
UT16	Indicates that a signal is part of the 16-bit UTOPIA interface.
MII	Indicates that a signal is part of the media independent interface.
RMII	Indicates that a signal is part of the reduced media independent interface.

8.2 VR and ZQ Packages—MPC8275 and MPC8270

The following figures and table represent the alternate 516 PBGA package. For information on the standard package for the MPC8280 and the MPC8270, refer to Section 8.1, "ZU Package—MPC8280 and MPC8270," on page -43.

Figure 15 shows the pinout of the VR and ZQ packages as viewed from the top surface.

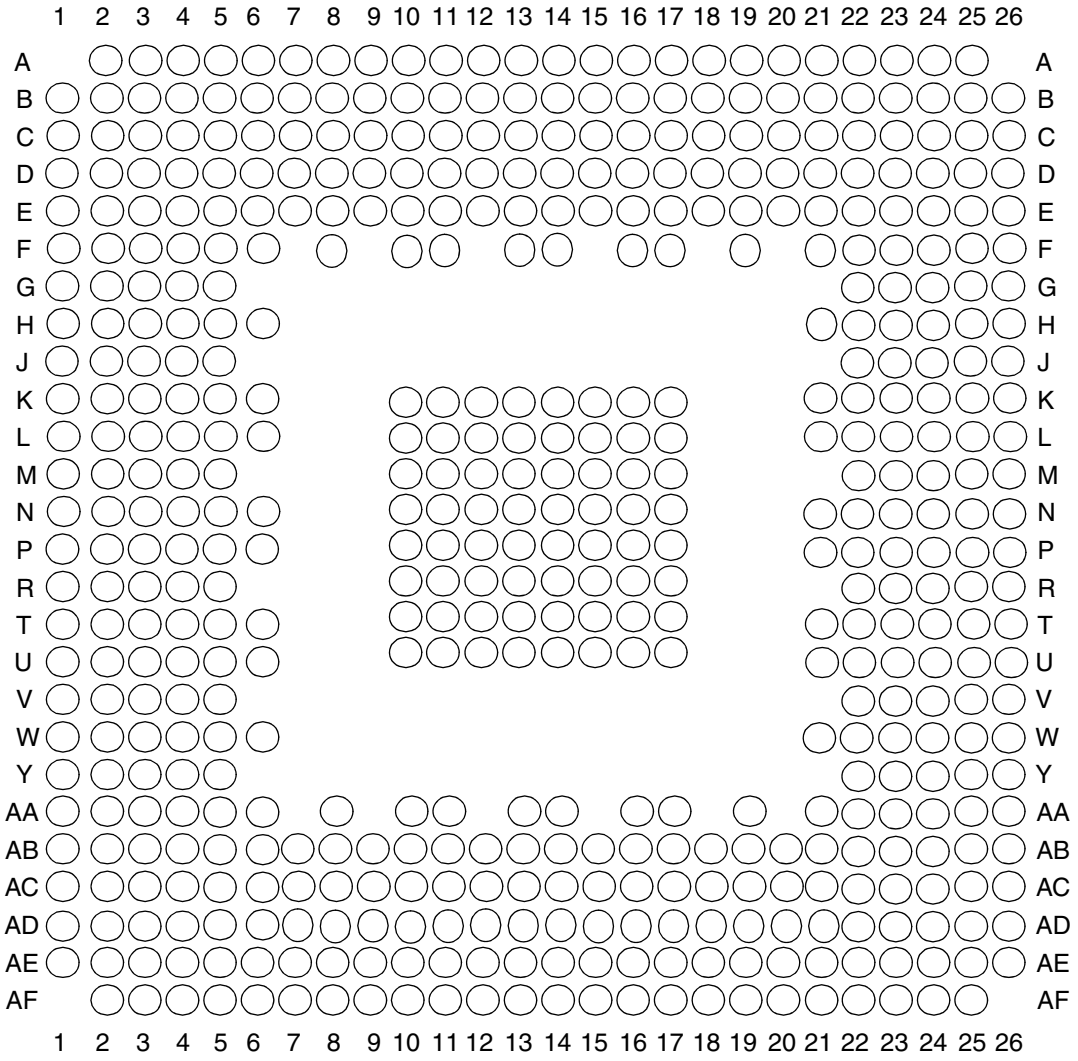

Not to Scale

Figure 15. Pinout of the 516 PBGA Package (View from Top)

Figure 16 shows the side profile of the PBGA package to indicate the direction of the top surface view.

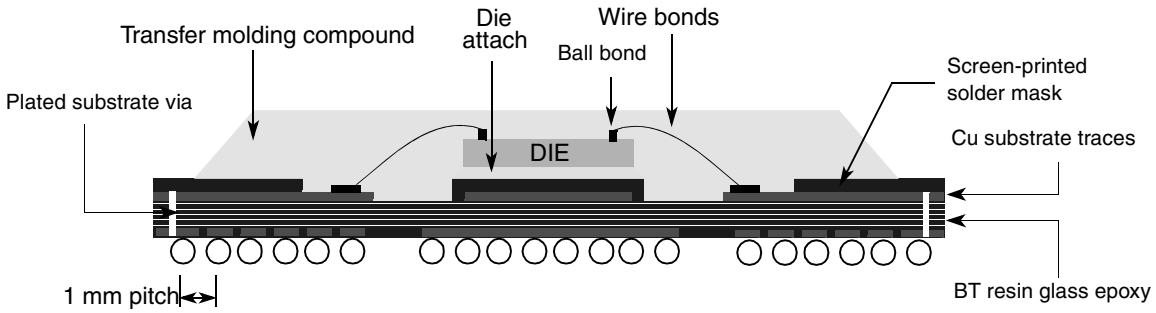

Figure 16. Side View of the PBGA Package Remove

NOTE: Temperature Reflow for the VR Package

In the VR package, sphere composition is lead-free (refer to Table 2). This requires higher temperature reflow than what is required for other PowerQUICC II packages. Users should consult "Freescale PowerQUICC II™ Pb-Free Packaging Information" (MPC8250PBFREEPKG) available at www.freescale.com.

Table 23 shows the pinout list of the MPC8275 and MPC8270. Table 22 defines conventions and acronyms used in Table 23.

Table 23. MPC8275 and MPC8270 (VR and ZQ Packages) Pinout List

Pin Name		Ball
MPC8275/MPC8270	MPC8275 only	
$\overline{BR}$		C16
$\overline{BG}$		D2
$\overline{ABB}/\overline{IRQ2}$		C1
$\overline{TS}$		D1
A0		D5
A1		E8
A2		C4
A3		B4
A4		A4
A5		D7
A6		D8
A7		C6
A8		B5
A9		B6
A10		C7

Table 23. MPC8275 and MPC8270 (VR and ZQ Packages) Pinout List (continued)

Pin Name		Ball
MPC8275/MPC8270	MPC8275 only	
A11		C8
A12		A6
A13		D9
A14		F11
A15		B7
A16		B8
A17		C9
A18		A7
A19		B9
A20		E11
A21		A8
A22		D11
A23		B10
A24		C11
A25		A9
A26		B11
A27		C12
A28		D12
A29		A10
A30		B12
A31		B13
TT0		E7
TT1		B3
TT2		F8
TT3		A3
TT4		C3
$\overline{\text{TBST}}$		F5
TSIZ0		E3
TSIZ1		E2
TSIZ2		E1
TSIZ3		E4
$\overline{\text{AACK}}$		D3
$\overline{\text{ARTRY}}$		C2

Table 23. MPC8275 and MPC8270 (VR and ZQ Packages) Pinout List (continued)

Pin Name		Ball
MPC8275/MPC8270	MPC8275 only	
$\overline{\text{DBG}}$		A14
$\overline{\text{DBB}}$/$\overline{\text{IRQ3}}$		C15
D0		W4
D1		Y1
D2		V1
D3		P4
D4		N3
D5		K5
D6		J4
D7		G1
D8		AB1
D9		U4
D10		U2
D11		N6
D12		N1
D13		L1
D14		J5
D15		G3
D16		AA2
D17		W1
D18		T3
D19		T1
D20		M2
D21		K2
D22		J1
D23		G4
D24		U5
D25		T5
D26		P5
D27		P3
D28		M3
D29		K3
D30		H2

Table 23. MPC8275 and MPC8270 (VR and ZQ Packages) Pinout List (continued)

Pin Name		Ball
MPC8275/MPC8270	MPC8275 only	
D31		G5
D32		AA1
D33		V2
D34		U1
D35		P2
D36		M4
D37		K4
D38		H3
D39		F2
D40		Y2
D41		U3
D42		T2
D43		N2
D44		M5
D45		K1
D46		H4
D47		F1
D48		W2
D49		T4
D50		R3
D51		N4
D52		M1
D53		J2
D54		H5
D55		F3
D56		V3
D57		R5
D58		R2
D59		N5
D60		L2
D61		J3
D62		H1
D63		F4

Table 23. MPC8275 and MPC8270 (VR and ZQ Packages) Pinout List (continued)

Pin Name		Ball
MPC8275/MPC8270	MPC8275 only	
DP0/RSRV/EXT_BR2		AB3
IRQ1/DP1/EXT_BG2		W5
IRQ2/DP2/TLBISYNC/EXT_DBG2		AC2
IRQ3/DP3/CKSTP_OUT/EXT_BR3		AA3
IRQ4/DP4/CORE_SRESET/EXT_BG3		AD1
IRQ5/CINT/DP5/TBEN/EXT_DBG3		AC1
IRQ6/DP6/CSE0		AB2
IRQ7/DP7/CSE1		Y3
PSDVAL		D15
TA		Y4
TEA		D16
GBL/IRQ1		E15
CI/BADDR29/IRQ2		D14
WT/BADDR30/IRQ3		E14
L2_HIT/IRQ4		A17
CPU_BG/BADDR31/IRQ5/CINT		B14
CPU_DBG		F13
CPU_BR		B17
CS0		AC6
CS1		AD6
CS2		AE6
CS3		AB7
CS4		AF7
CS5		AC7
CS6		AD7
CS7		AF8
CS8		AE8
CS9		AD8
CS10/BCTL1		AC8
CS11/AP0		AB8
BADDR27		C13
BADDR28		A12
ALE		D13

Table 23. MPC8275 and MPC8270 (VR and ZQ Packages) Pinout List (continued)

Pin Name		Ball
MPC8275/MPC8270	MPC8275 only	
BCTL0		AF4
PWE0/PSDDQM0/PBS0		AA5
PWE1/PSDDQM1/PBS1		AE4
PWE2/PSDDQM2/PBS2		AD4
PWE3/PSDDQM3/PBS3		AF3
PWE4/PSDDQM4/PBS4		AB4
PWE5/PSDDQM5/PBS5		AE3
PWE6/PSDDQM6/PBS6		AF2
PWE7/PSDDQM7/PBS7		AD3
PSDA10/PGPL0		AE2
PSDWE/PGPL1		AD2
POE/PSDRAS/PGPL2		AE1
PSDCAS/PGPL3		AC3
PGTA/PUPMWAIT/PGPL4/PPBS		W6
PSDAMUX/PGPL5		AA4
LWE0/LSDDQM0/LBS0/PCI_CFG0		AC9
LWE1/LSDDQM1/LBS1/PCI_CFG1		AD9
LWE2/LSDDQM2/LBS2/PCI_CFG2		AE9
LWE3/LSDDQM3/LBS3/PCI_CFG3		AF9
LSDA10/LGPL0/PCI_MODCKH0		AB6
LSDWE/LGPL1/PCI_MODCKH1		AF5
LOE/LSDRAS/LGPL2/PCI_MODCKH2		AE5
LSDCAS/LGPL3/PCI_MODCKH3		AD5
LGTA/LUPMWAIT/LGPL4/LPBS		AC5
LGPL5/LSDAMUX/PCI_MODCK		AB5
LWR		AF6
L_A14/PAR		AE13
L_A15/FRAME/SMI		AD15
L_A16/TRDY		AF16
L_A17/IRDY/CKSTP_OUT		AF15
L_A18/STOP		AE15
L_A19/DEVSEL		AE14
L_A20/IDSEL		AC17

Table 23. MPC8275 and MPC8270 (VR and ZQ Packages) Pinout List (continued)

Pin Name		Ball
MPC8275/MPC8270	MPC8275 only	
L_A21/$\overline{\text{PERR}}$		AD14
L_A22/$\overline{\text{SERR}}$		AF13
L_A23/$\overline{\text{REQ0}}$		AE20
L_A24/$\overline{\text{REQ1}}$/HSEJSW		AC14
L_A25/$\overline{\text{GNT0}}$		AC19
L_A26/$\overline{\text{GNT1}}$/HSLED		AD13
L_A27/$\overline{\text{GNT2}}$/$\overline{\text{HSENUM}}$		AF21
L_A28/$\overline{\text{RST}}$/$\overline{\text{CORE_SRESET}}$		AF22
L_A29/$\overline{\text{INTA}}$		AE21
L_A30/$\overline{\text{REQ2}}$		AB14
L_A31/DLLOUT		AD20
LCL_D0/AD0		AB9
LCL_D1/AD1		AB10
LCL_D2/AD2		AC10
LCL_D3/AD3		AD10
LCL_D4/AD4		AE10
LCL_D5/AD5		AF10
LCL_D6/AD6		AF11
LCL_D7/AD7		AB12
LCL_D8/AD8		AB11
LCL_D9/AD9		AF12
LCL_D10/AD10		AE11
LCL_D11/AD11		AC13
LCL_D12/AD12		AC12
LCL_D13/AD13		AB13
LCL_D14/AD14		AD12
LCL_D15/AD15		AF14
LCL_D16/AD16		AF17
LCL_D17/AD17		AE16
LCL_D18/AD18		AD16
LCL_D19/AD19		AC16
LCL_D20/AD20		AB16
LCL_D21/AD21		AF18

Table 23. MPC8275 and MPC8270 (VR and ZQ Packages) Pinout List (continued)

Pin Name		Ball
MPC8275/MPC8270	MPC8275 only	
LCL_D22/AD22		AE17
LCL_D23/AD23		AD17
LCL_D24/AD24		AB17
LCL_D25/AD25		AE18
LCL_D26/AD26		AD18
LCL_D27/AD27		AC18
LCL_D28/AD28		AE19
LCL_D29/AD29		AF20
LCL_D30/AD30		AD19
LCL_D31/AD31		AB18
LCL_DP0/C0/$\overline{\text{BE0}}$		AE12
LCL_DP1/C1/$\overline{\text{BE1}}$		AA13
LCL_DP2/C2/$\overline{\text{BE2}}$		AC15
LCL_DP3/C3/$\overline{\text{BE3}}$		AF19
$\overline{\text{IRQ0}}$/$\overline{\text{NMI_OUT}}$		A11
$\overline{\text{IRQ7}}$/$\overline{\text{INT_OUT}}$/$\overline{\text{APE}}$		E5
$\overline{\text{TRST}}$ [1]		F22
TCK		A24
TMS		C24
TDI		A25
TDO		B24
$\overline{\text{TRIS}}$		C19
$\overline{\text{PORESET}}$[1]		B25
$\overline{\text{HRESET}}$		D24
$\overline{\text{SRESET}}$		E23
$\overline{\text{QREQ}}$		D18
$\overline{\text{RSTCONF}}$		E24
MODCK1/AP1/TC0/BNKSEL0		B16
MODCK2/AP2/TC1/BNKSEL1		F16
MODCK3/AP3/TC2/BNKSEL2		A15
CLKIN1		G22
PA0/$\overline{\text{RESTART1}}$/DREQ3	FCC2_UTM_TXADDR2	AC20 [2]
PA1/$\overline{\text{REJECT1}}$/$\overline{\text{DONE3}}$	FCC2_UTM_TXADDR1	AC21[2]

Table 23. MPC8275 and MPC8270 (VR and ZQ Packages) Pinout List (continued)

Pin Name		Ball
MPC8275/MPC8270	MPC8275 only	
PA2/CLK20/$\overline{\text{DACK3}}$	FCC2_UTM_TXADDR0	AF25[2]
PA3/CLK19/$\overline{\text{DACK4}}$/L1RXD1A2	FCC2_UTM_RXADDR0	AE24[2]
PA4/$\overline{\text{REJECT2}}$/$\overline{\text{DONE4}}$	FCC2_UTM_RXADDR1	AA21[2]
PA5/$\overline{\text{RESTART2}}$/DREQ4	FCC2_UTM_RXADDR2	AD25[2]
PA6	FCC2_UT_RXADDR3	AC24[2]
PA7/SMSYN2	FCC2_UT_TXADDR3	AA22[2]
PA8/SMRXD2	FCC2_UT_TXADDR4	AA23[2]
PA9/SMTXD2		Y26[2]
PA10/MSNUM5	FCC1_UT8_RXD0/FCC1_UT16_RXD8	W22[2]
PA11/MSNUM4	FCC1_UT8_RXD1/FCC1_UT16_RXD9	W23[2]
PA12/MSNUM3	FCC1_UT8_RXD2/ FCC1_UT16_RXD10	V26[2]
PA13/MSNUM2	FCC1_UT8_RXD3/ FCC1_UT16_RXD11	V25[2]
PA14/FCC1_MII_HDLC_RXD3	FCC1_UT8_RXD4/ FCC1_UT16_RXD12	T22[2]
PA15/FCC1_MII_HDLC_RXD2	/FCC1_UT8_RXD5/ FCC1_UT16_RXD13	T25[2]
PA16/FCC1_MII_HDLC_RXD1/ FCC1_RMII_RXD1	FCC1_UT8_RXD6/ FCC1_UT16_RXD14	R24[2]
PA17/FCC_MII_HDLC_RXD0/ FCC1_MII_TRAN_RXD/ FCCI_RMII_RXD0	FCC1_UT8_RXD7/ FCC1_UT16_RXD15	P22[2]
PA18/FCC1_MII_HDLC_TXD0/ FCC1_MIITRAN_TXD/ FCC1_RMII_TXD0	FCC1_UT8_TXD7/FCC1_UT16_TXD15	N26[2]
PA19/FCC1_MII_HDLC_TXD1/ FCC1_RMII_TXD1	FCC1_UT8_TXD6/FCC1_UT16_TXD14	N23[2]
PA20/FCC1_MII_HDLC_TXD2	FCC1_UT8_TXD5/FCC1_UT16_TXD13	K26[2]
PA21/FCC1_MII_HDLC_TXD3	FCC1_UT8_TXD4/FCC1_UT16_TXD12	L23[2]
PA22	FCC1_UT8_TXD3/FCC1_UT16_TXD11	K23[2]
PA23	FCC1_UT8_TXD2/FCC1_UT16_TXD10	H26[2]
PA24/MSNUM1	FCC1_UT8_TXD1/FCC1_UT16_TXD9	F25[2]
PA25/MSNUM0	FCC1_UT8_TXD0/FCC1_UT16_TXD8	D26[2]
PA26/FCC1_MII_RMII_RX_ER/	FCC1_UTM_RXCLAV/ FCC1_UTS_RXCLAV	D25[2]
PA27/FCC1_MII_RX_DV/ FCC1_RMII_CRS_DV	FCC1_UT_RXSOC	C25[2]

Table 23. MPC8275 and MPC8270 (VR and ZQ Packages) Pinout List (continued)

Pin Name		Ball
MPC8275/MPC8270	MPC8275 only	
PA28/FCC1_MII_TX_EN/ FCC1_RMII_TX_EN	FCC1_UTM_RXENB/ FCC1_UTS_RXENB	C22[2]
PA29/FCC1_MII_TX_ER	FCC1_UT_TXSOC	B21[2]
PA30/FCC1_MII_CRS/FCC1_RTS	FCC1_UTM_TXCLAV/ FCC1_UTS_TXCLAV	A20[2]
PA31/FCC1_MII_COL	FCC1_UTM_TXENB/ FCC1_UTS_TXENB	A19[2]
PB4/FCC3_MII_HDLC_TXD3/ L1RSYNCA2/FCC3_RTS	FCC2_UT8_RXD0	AD21[2]
PB5/FCC3_MII_HDLC_TXD2/ L1TSYNCA2/L1GNTA2	FCC2_UT8_RXD1	AD22[2]
PB6/FCC3_MII_HDLC_TXD1/ FCC3_RMII_TXD1/ L1RXDA2/L1RXD0A2	FCC2_UT8_RXD2	AC22[2]
PB7/FCC3_MII_HDLC_TXD0/ FCC3_RMII_TXD0/ FCC3_TXD/L1TXDA2/L1TXD0A2	FCC2_UT8_RXD3	AE26[2]
PB8/FCC3_MII_HDLC_RXD0/ FCC3_RMII_RXD0/ FCC3_RXD/TXD3	FCC2_UT8_TXD3	AB23[2]
PB9/FCC3_MII_HDLC_RXD1/ FCC3_RMII_RXD1/L1TXD2A2	FCC2_UT8_TXD2	AC26[2]
PB10/FCC3_MII_HDLC_RXD2	FCC2_UT8_TXD1	AB26[2]
PB11/FCC3_MII_HDLC_RXD3	FCC2_UT8_TXD0	AA25[2]
PB12/FCC3_MII_CRS/TXD2		W26[2]
PB13/FCC3_MII_COL/L1TXD1A2		W25[2]
PB14/FCC3_MII_RMII_TX_EN/RXD3		V24[2]
PB15/FCC3_MII_TX_ER/RXD2		U24[2]
PB16/FCC3_MII_RMII_RX_ER/CLK18		R22[2]
PB17/FCC3_MII_RX_DV/CLK17/ FCC3_RMII_CRS_DV		R23[2]
PB18/FCC2_MII_HDLC_RXD3/ L1CLKOD2/L1RXD2A2	FCC2_UT8_RXD4	M23[2]
PB19FCC2_MII_HDLC_RXD2/ L1RQD2/L1RXD3A2	FCC2_UT8_RXD5	L24[2]
PB20/FCC2_MII_HDLC_RMII_RXD1/ L1RSYNCD2	FCC2_UT8_RXD6	K24[2]
PB21//FCC2_MII_HDLC_RMII_RXD0/ FCC2_TRAN_RXD/L1TSYNCD2/ L1GNTD2	FCC2_UT8_RXD7	L21[2]

Table 23. MPC8275 and MPC8270 (VR and ZQ Packages) Pinout List (continued)

Pin Name		Ball
MPC8275/MPC8270	MPC8275 only	
PB22/FCC2_MII_HDLC_RMII_TXD0/ FCC2_TXD/FCC2_RMII_TXD0/ L1RXDD2	FCC2_UT8_TXD7	P25[2]
PB23/FCC2_MII_HDLC_TXD1/ L1RXD2A1/L1TXDD2/ FCC2_RMII_TXD1	FCC2_UT8_TXD6	N25[2]
PB24/FCC2_MII_HDLC_TXD2/ L1RSYNCC2	FCC2_UT8_TXD5	E26[2]
PB25/FCC2_MII_HDLC_TXD3/ L1TSYNCC2/L1GNTC2	FCC2_UT8_TXD4	H23[2]
PB26/FCC2_MII_CRS/L1RXDC2	FCC2_UT8_TXD1	C26[2]
PB27/FCC2_MII_COL/L1TXDC2	FCC2_UT8_TXD0	B26[2]
PB28/FCC2_MII_RX_ER/FCC2_RMII_RX_ER/ FCC2_RTS/L1TSYNCB2/L1GNTB2/TXD1		A22[2]
PB29/L1RSYNCB2/ FCC2_MII_TX_EN/FCC2_RMII_TX_EN	FCC2_UTM_RXCLAV/ FCC2_UTS_RXCLAV	A21[2]
PB30/FCC2_MII_RX_DV/L1RXDB2/ FCC2_RMII_CRS_DV	FCC2_UT_TXSOC	E20[2]
PB31/FCC2_MII_TX_ER/L1TXDB2	FCC2_UT_RXSOC	C20[2]
PC0/DREQ1/BRGO7/SMSYN2/ L1CLKOA2		AE22[2]
PC1/DREQ2/SPISEL/BRGO6/L1RQA2		AA19[2]
PC2/FCC3_CD/DONE2	FCC2_UT8_TXD3	AF24[2]
PC3/FCC3_CTS/DACK2/CTS4/ USB_RP	FCC2_UT8_TXD2	AE25[2]
PC4/SI2_L1ST4/FCC2_CD	FCC2_UTM_RXENB/ FCC2_UTS_RXENB	AB22[2]
PC5/SI2_L1ST3/FCC2_CTS	FCC2_UTM_TXCLAV/ FCC2_UTS_TXCLAV	AC25[2]
PC6/FCC1_CD	FCC1_UTM_RXADDR2/ FCC1_UTS_RXADDR2/ FCC1_UTM_RXCLAV1	AB25[2]
PC7/FCC1_CTS	FCC1_UTM_TXADDR2/ FCC1_UTS_TXADDR2/ FCC1_UTM_TXCLAV1	AA24[2]
PC8/CD4/RENA4/SI2_L1ST2/CTS3/ USB_RN	FCC1_UT16_TXD0	Y24[2]
PC9/CTS4/CLSN4/SI2_L1ST1/ L1TSYNCA2/L1GNTA2/USB_RP	FCC1_UT16_TXD1	U22[2]
PC10/CD3/RENA3	FCC1_UT16_TXD2/FCC2_UT8_RXD3	V23[2]

Table 23. MPC8275 and MPC8270 (VR and ZQ Packages) Pinout List (continued)

Pin Name		Ball
MPC8275/MPC8270	MPC8275 only	
PC11/$\overline{\text{CTS3}}$/CLSN3/L1TXD3A2	FCC2_UT8_RXD2	U23[2]
PC12/$\overline{\text{CD2}}$/RENA2	FCC1_UTM_RXADDR1/ FCC1_UTS_RXADDR1	T26[2]
PC13/$\overline{\text{CTS2}}$/CLSN2	FCC1_UTM_TXADDR1/ FCC1_UTS_TXADDR1	R26[2]
PC14/$\overline{\text{CD1}}$/RENA1	FCC1_UTM_RXADDR0/ FCC1_UTS_RXADDR0	P26[2]
PC15/$\overline{\text{CTS1}}$/CLSN1/SMTXD2	FCC1_UTM_TXADDR0/ FCC1_UTS_TXADDR0	P24[2]
PC16/CLK16/TIN4		M26[2]
PC17/CLK15/TIN3/BRGO8		L26[2]
PC18/CLK14/$\overline{\text{TGATE2}}$		M24[2]
PC19/CLK13/BRGO7/SPICLK		L22[2]
PC20/CLK12/$\overline{\text{TGATE1}}$/$\overline{\text{USB_OE}}$		K25[2]
PC21/CLK11/BRGO6		J25[2]
PC22/CLK10/$\overline{\text{DONE1}}$	FCC1_UT_TXPRTY	G26[2]
PC23/CLK9/BRGO5/$\overline{\text{DACK1}}$		F26[2]
PC24/CLK8/$\overline{\text{TOUT4}}$	FCC2_UT8_TXD3	G24[2]
PC25/CLK7/BRGO4	FCC2_UT8_TXD2	E25[2]
PC26/CLK6/$\overline{\text{TOUT3}}$/TMCLK		G23[2]
PC27/FCC3_TXD/FCC3_MII_TXD0/ FCC3_RMII_TXD0/CLK5/BRGO3		B23[2]
PC28/CLK4/TIN1/$\overline{\text{TOUT2}}$/$\overline{\text{CTS2}}$/CLSN2	FCC2_UT_RXADDR4	E22[2]
PC29/CLK3/TIN2/BRGO2/$\overline{\text{CTS1}}$/CLSN1		E21[2]
PC30/CLK2/$\overline{\text{TOUT1}}$	FCC2_UT8_TXD3	D21[2]
PC31/CLK1/BRGO1		B20[2]
PD4/BRGO8/$\overline{\text{FCC3_RTS}}$/SMRXD2		AF23[2]
PD5/$\overline{\text{DONE1}}$	FCC1_UT16_TXD3	AE23[2]
PD6/$\overline{\text{DACK1}}$	FCC1_UT16_TXD4	AB21[2]
PD7/SMSYN1/FCC1_TXCLAV2	FCC1_UTM_TXADDR3/ FCC1_UTS_TXADDR3/ FCC2_UTM_TXADDR4 FCC2_UTS_TXADDR1	AD23[2]
PD8/SMRXD1/BRGO5	FCC2_UT_TXPRTY	AD26[2]
PD9/SMTXD1/BRGO3	FCC2_UT_RXPRTY	Y22[2]
PD10/L1CLKOB2/BRGO4	FCC2_UT8_RXD1	AB24[2]

Table 23. MPC8275 and MPC8270 (VR and ZQ Packages) Pinout List (continued)

Pin Name		Ball
MPC8275/MPC8270	MPC8275 only	
PD11/$\overline{\text{L1RQB2}}$	FCC2_UT8_RXD0 L1GNTB1	Y23[2]
PD12		AA26[2]
PD13		W24[2]
PD14/L1CLKOC2/I2CSCL	FCC1_UT16_RXD0	V22[2]
PD15/$\overline{\text{L1RQC2}}$/I2CSDA	FCC1_UT16_RXD1	U26[2]
PD16/SPIMISO	FCC1_UT_TXPRTY	T23[2]
PD17/BRGO2/SPIMOSI	FCC1_UT_RXPRTY	R25[2]
PD18/SPICLK	FCC1_UTM_RXADDR4/ FCC1_UTS_RXADDR4/ FCC1_UTM_RXCLAV3/ FCC2_UTM_RXADDR3/ FCC2_UTS_RXADDR0	P23[2]
PD19/SPISEL/BRGO1	FCC1_UTM_TXADDR4/ FCC1_UTS_TXADDR4/ FCC1_UTM_TXCLAV3/ FCC2_UTM_TXADDR3/ FCC2_UTS_TXADDR0	N22[2]
PD20/$\overline{\text{RTS4}}$/TENA4/L1RSYNCA2/ USB_TP	FCC1_UT16_RXD2	M25[2]
PD21/TXD4/L1RXD0A2/L1RXDA2/ USB_TN	FCC1_UT16_RXD3	L25[2]
PD22/RXD4L1TXD0A2/L1TXDA2/ USB_RXD	FCC1_UT16_TXD5	J26[2]
PD23/$\overline{\text{RTS3}}$/TENA3	FCC1_UT16_RXD4	K22[2]
PD24/TXD3	FCC1_UT16_RXD5	G25[2]
PD25/RXD3	FCC1_UT16_TXD6	H24[2]
PD26/$\overline{\text{RTS2}}$/TENA2	FCC1_UT16_RXD6	F24[2]
PD27/TXD2	FCC1_UT16_RXD7	H22[2]
PD28/RXD2	FCC1_UT16_TXD7	B22[2]
PD29/$\overline{\text{RTS1}}$/TENA1	FCC1_UTM_RXADDR3/ FCC1_UTS_RXADDR3/ FCC1_UTM_RXCLAV2/ FCC2_UTM_RXADDR4/ FCC2_UTS_RXADDR1	D22[2]
PD30/TXD1	$\overline{\text{FCC2_UTM_TXENB}}$/ $\overline{\text{FCC2_UTS_TXENB}}$	C21[2]
PD31/RXD1		E19[2]
VCCSYN		D19

Table 23. MPC8275 and MPC8270 (VR and ZQ Packages) Pinout List (continued)

Pin Name		Ball
MPC8275/MPC8270	MPC8275 only	
VCCSYN1		K6
CLKIN2		K21
SPARE4 [3]		C14
$\overline{\text{PCI_MODE}}$ [4]		AD24
SPARE6[3]		B15
No connect [5]		E17, C23
I/O power		E6, F6, H6, L5, L6, P6, T6, U6, V5, Y5, AA6, AA8, AA10, AA11, AA14, AA16, AA17, AB19, AB20, W21, U21, T21, P21, N21, M22, J22, H21, F21, F19, F17, E16, F14, E13, E12, F10, E10, E9
Core Power		L3, V4, W3, AC11, AD11, AB15, U25, T24, J24, H25, F23, B19, D17, C17, D10, C10
Ground		B18 [6], A18 [7], A2, B1, B2, A5, C5, C18, D4, D6, G2, L4, P1, R1, R4, AC4, AE7, AC23, Y25, N24, J23, A23, D23, D20, E18, A13, A16, K10, K11, K12, K13, K14, K15, K16, K17, L10, L11, L12, L13, L14, L15, L16, L17, M10, M11, M12, M13, M14, M15, M16, M17, N10, N11, N12, N13, N14, N15, N16, N17, P10, P11, P12, P13, P14, P15, P16, P17, R10, R11,R12, R13, R14, R15, R16, R17, T10, T11, T12, T13, T14, T15, T16, T17, U10, U11, U12, U13, U14, U15, U16, U17

1 Should be tied to VDDH via a 2K Ω external pull-up resistor.

2 The default configuration of the CPM pins (PA[0–31], PB[4–31], PC[0–31], PD[4–31]) is input. To prevent excessive DC current, it is recommended to either pull unused pins to GND or VDDH, or to configure them as outputs.

3 Must be pulled down or left floating.

4 If PCI is not desired, must be pulled up or left floating.

5 Sphere is not connected to die.

6 GNDSYN (B18): This pin exists as a separate ground signal in MPC826x(A) devices; it does not exist as a separate ground signal on the MPC8275/MPC8270. New designs must connect B18 to GND and follow the suggestions in Section 4.6, “Layout Practices.” Old designs in which the MPC8275/MPC8270 is used as a drop-in replacement can leave the pin connected to GND with the noise filtering capacitors.

7 XFC (A18) pin: This pin is used in MPC826x(A) devices; it is not used in MPC8275/MPC8270 because there is no need for external capacitor to operate the PLL. New designs should connect A18 (XFC) pin to GND. Old designs in which the MPC8275/MPC8270 is used as a drop-in replacement can leave the pin connected to the current capacitor.

9 Package Description

The following sections provide the package parameters and mechanical dimensions.

9.1 Package Parameters

Package parameters are provided in Table 24.

Table 24. Package Parameters

Package	Devices	Outline (mm)	Type	Interconnects	Pitch (mm)	Nominal Unmounted Height (mm)
ZU	MPC8280 MPC8270	37.5 x 37.5	TBGA	480	1.27	1.55
VR	MPC8275VR MPC8270VR	27 x 27	PBGA	516	1	2.25
ZQ	MPC8275ZQ MPC8270ZQ	27 x 27	PBGA	516	1	2.25

9.2 Mechanical Dimensions

Figure 17 provides the mechanical dimensions and bottom surface nomenclature of the 480 TBGA (ZU) package. Refer to Table 2.

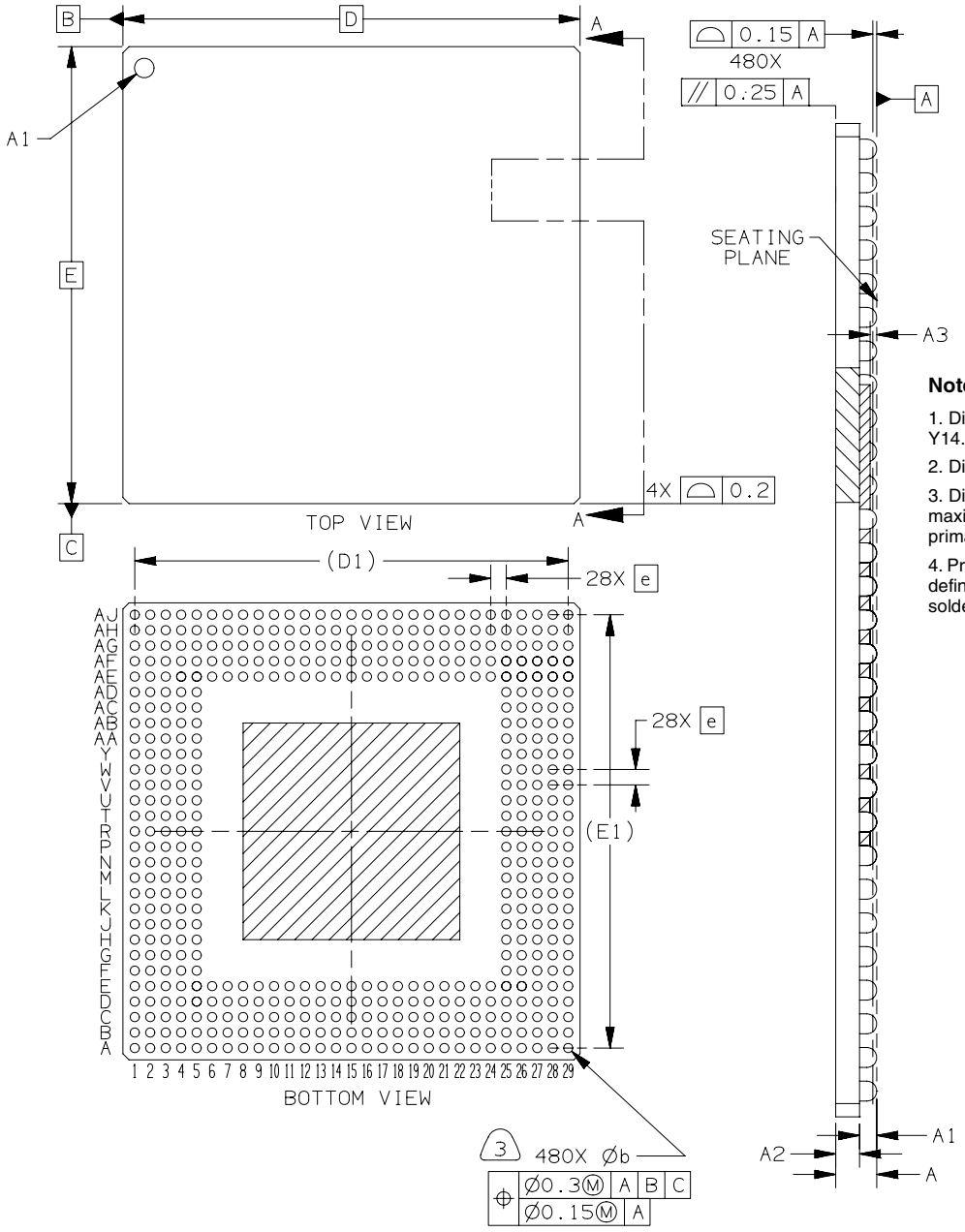

Notes:

1. Dimensions and Tolerancing per ASME Y14.5M-1994.
2. Dimensions in millimeters.
3. Dimension b is measured at the maximum solder ball diameter, parallel to primary data A.
4. Primary data A and the seating plane are defined by the spherical crowns of the solder balls.

Dim	Millimeters	
	Min	Max
A	1.45	1.65
A1	0.60	0.70
A2	0.85	0.95
A3	0.25	—
b	0.65	0.85
D	37.50 BSC	
D1	35.56 REF	
e	1.27 BSC	
E	37.50 BSC	
E1	35.56 REF	

Figure 17. Mechanical Dimensions and Bottom Surface Nomenclature—480 TBGA

Figure 18 provides the mechanical dimensions and bottom surface nomenclature of the 516 PBGA (VR/ZQ) packages.

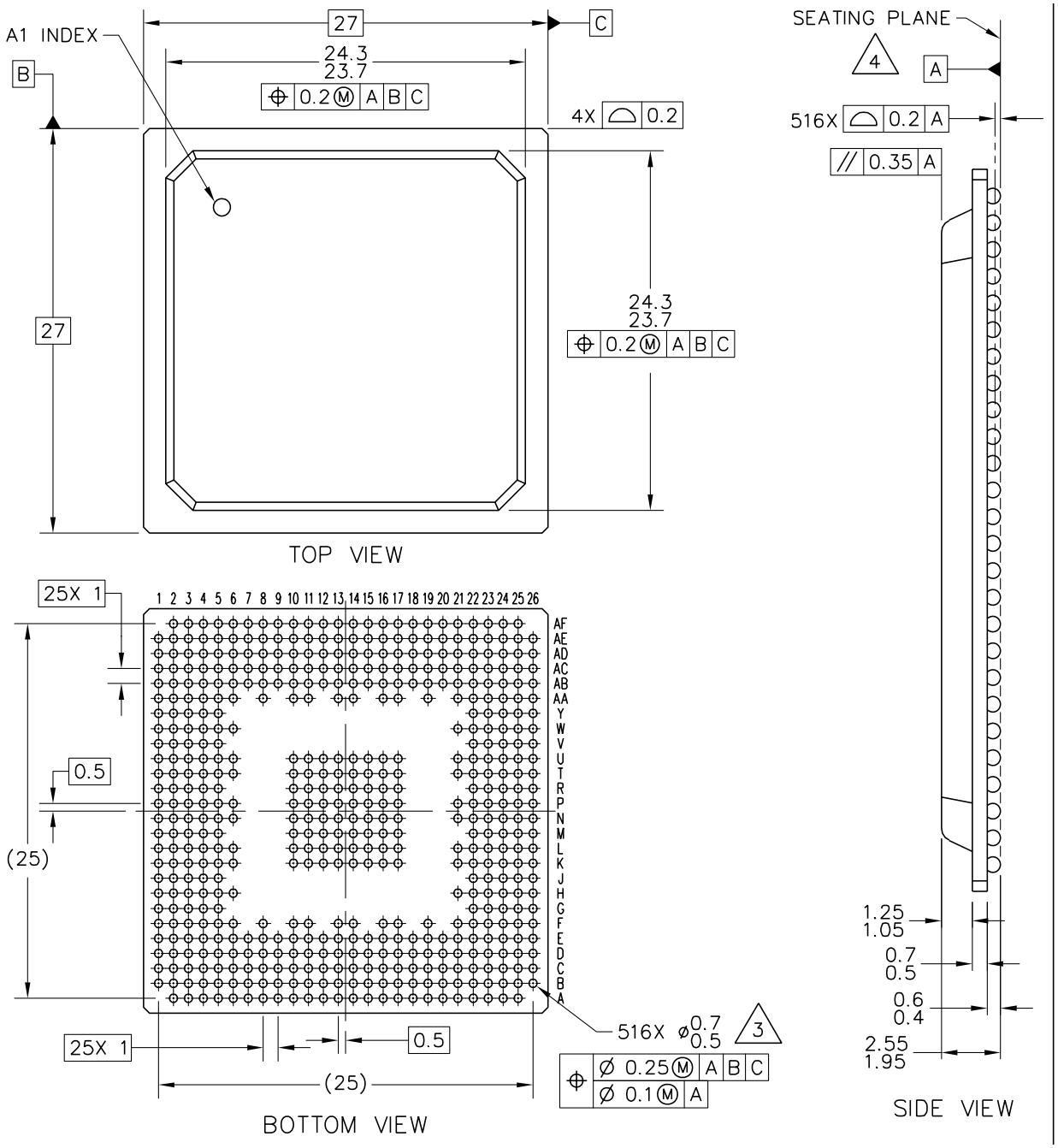

Figure 18. Mechanical Dimensions and Bottom Surface Nomenclature—516 PBGA

10 Ordering Information

Figure 19 provides an example of the Freescale part numbering nomenclature for the MPC8280. In addition to the processor frequency, the part numbering scheme also consists of a part modifier that indicates any enhancement(s) in the part from the original production design. Each part number also contains a revision code that refers to the die mask revision number and is specified in the part numbering scheme for identification purposes only. For more information, contact your local Freescale sales office.

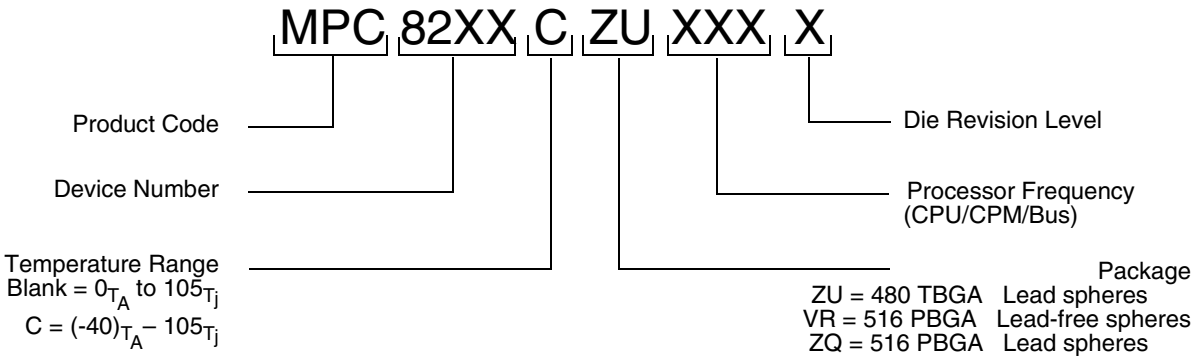

Figure 19. Freescale Part Number Key

11 Document Revision History

Table 25. Document Revision History

Revision	Date	Substantive Changes
1.7	12/2006	• Section 6, “AC Electrical Characteristics,” removed deratings statement and clarified AC timing descriptions.
1.6	05/2006	• Table 11: Added text to clarify that Data Bus Parity is not supported at 66 Mhz. • Table 11: Added text to clarify that Data Bus ECC is supported at 66 Mhz • Table 11: Added note to DP pins to show it is not supported at 66 MHz • Table 12: Added note to support 1 ns hold time
1.5	03/2006	• Added Section 6.3, “JTAG Timings”
1.4	11/2005	• In Section 6.2, “SIU AC Characteristics”, modified the note on CLKIN Jitter and Duty Cycle. • Modified Figure 17 to display all text.
1.3	01/2005	• Modification for correct display of assertion level (“$\overline{\text{overbar}}$”) for some signals

Table 25. Document Revision History (continued)

Revision	Date	Substantive Changes
1.2	12/2004	• Section 2: removed voltage tracking note • Table 3: Note 2 updated regarding VDD/VCCSYN relationship to VDDH during power-on reset • Table 5: Note 2 updated to reflect VIH=2.5 for TCK, TRST, PORESET; request for external pullup removed. • Table 5: Note 4 added regarding IIC compatibility • Section 4.2: New information about jumper-to-case thermal resistance • Section 4.3: New information about jumper-to-board thermal resistance • Section 4.4: New information about estimation with simulation • Section 4.6: Updated description of layout practices • Section 6: Added sentence providing derating factor • Section 6.1, “CPM AC Characteristics”: added Note: Rise/Fall Time on CPM Input Pins • Table 9: updated values for following specs: sp42, sp43, sp42a • Table 10: updated values for following specs: sp16b, sp18b, sp20, sp22 • Section 6.2: added spread sprectrum clocking note • Table 11: combined specs sp11 and sp11a • Sections 7.2, 7.3: unit of ns added to Tval notes • Section 7, “Clock Configuration Modes”: Updated all table footnotes reflect updated CPU Fmin of 150 MHz commercial temp devices, 175 MHz extended temp; CPM Fmin of 120 MHz.

Table 25. Document Revision History (continued)

Revision	Date	Substantive Changes
1.0	2/2004	• Removal of “Advance Information” and “Preliminary.” The MPC8280 is fully qualified. • Table 1: New • Figure 1: Modification to note 2 • Section 1.1: Core frequency range is 166–450 MHz • Addition of ZQ (516 PBGA with Lead spheres) package references • Table 4: VDD and VCCSYN modified to 1.45–1.60 V • Note following Table 4: Modified • Table 5: Addition of note 2 regarding $\overline{\text{TRST}}$ and $\overline{\text{PORESET}}$ (see VIH row of Table 5) • Table 5: Changed I_{OL} for 60x signals to 6.0 mA • Table 5: Moved QREQ to V_{OL}: I_{OL}= 3.2 mA • Table 5: Addition of critical interrupt ($\overline{\text{CINT}}$) to $\overline{\text{IRQ5}}$ for V_{OL} (I_{OL} = 6.0mA) • Table 6: Addition of Ψ_{JT} and note 4 • Sections 4.1–4.5: New • Table 7: Modified power values (+ 150mW to each) • Table 8: Addition of note 2. Changed PCI impedance to 27 Ω. • Table 9: Changes to sp36b, SP38a, sp38b, sp37a, sp39a, sp40 and sp41 • Table 10: Changes to sp16a, sp18a, sp20 and sp21 • Section 6.2: Addition of Note: CLKIN Jitter and Duty Cycle • Table 11: Changes to sp13 @ 66 and 83 MHz, sp14 @ 83 MHz • Table 12: Change to sp30 (data bus signals). Changes to sp33b. Removal of note 2. • Table 16 through Table 20: Modification of note 1 regarding CPU and CPM Fmin. Modification to corresponding values in tables. • Table 21: Addition of note 1 to $\overline{\text{TRST}}$ (AH3) and $\overline{\text{PORESET}}$ (AG6) • Table 21: Addition of RXD3 to CPM port pin PB14. Previously omitted. • Table 21: Addition of critical interrupt ($\overline{\text{CINT}}$) to B21 and U4. Previously omitted. • Table 21: Addition of note 5 to ‘No connect’ (AA1, AG4) • Addition of “Note: Temperature Reflow for the VR Package" on page 59 • Table 23: Addition of note 1 to $\overline{\text{TRST}}$ (F22) and $\overline{\text{PORESET}}$ (B25) • Table 23: Addition of previously omitted signals that are multiplexed with CPM port pins: PA6—FCC2_UT_RXADDR3 PA7—FCC2_UT_TXADDR3 PA8—FCC2_UT_TXADDR4 PB14—RXD3 PC19—SPICLK PC22—FCC1_UT_TXPRTY PC28—FCC2_UT_RXADDR4 • Table 23: Removal of serial interface 1 (SI1) signals from port pins (see note 2 in Figure 1): PA[6–9], PB[8–17, 20–25], PC[6–7, 10–13], PD[4, 10–13, 16, 23–28] • Table 23: Addition of critical interrupt ($\overline{\text{CINT}}$) to AC1 and B14. Previously omitted. • Table 23: Addition of note 5 to ‘No connect’ (E17, C23)

Table 25. Document Revision History (continued)

Revision	Date	Substantive Changes
0.3	6/2003	• Removal of notes stating “no local bus” on VR-package devices. The MPC8270VR and the MPC8275VR have local bus support. • References to “G2 core” changed to “G2_LE core.” Refer to the *G2 Core Reference Manual* (G2CORERM/D). • Addition of VCCSYN to “Note” below Table 4, and to note 3 of Table 5 • Figure 2: New • Table 5: Addition of note 1 • Table 6: Addition of θ_{JB} and θ_{JC}. Modifications to ZU package values. • Table 7: Addition of various configurations, Modification of values. Addition of note 3. • Table 9: Addition of 66 MHZ and 100 MHz values. Addition of sp42a/sp43a. • Table 10: Addition of 66 MHZ and 100 MHz values • Table 12: sp30 values. sp33b @100 MHz value. Removal of previous note 2. Modification of current note 2. • Figure 5, Figure 6, Figure 7, and Figure 8: Addition of notes • Section 6.2: Addition of note on PCI timing • Table 16, Table 17, Table 18, Table 19, Table 20: Addition of note 1 concerning minimum operating frequencies • Addition of statement before clock tables about selection of clock configuration and input frequency • Table 21 and Table 23: Addition of note 1 to CPM pins
0.2	11/2002	Table 23, “VR Pinout”: Addition of C18 to the Ground (GND) pin list (page 63)
0.1	—	Initial public release

How to Reach Us:

Home Page:
www.freescale.com

email:
support@freescale.com

USA/Europe or Locations Not Listed:
Freescale Semiconductor
Technical Information Center, CH370
1300 N. Alma School Road
Chandler, Arizona 85224
(800) 521-6274
480-768-2130
support@freescale.com

Europe, Middle East, and Africa:
Freescale Halbleiter Deutschland GmbH
Technical Information Center
Schatzbogen 7
81829 Muenchen, Germany
+44 1296 380 456 (English)
+46 8 52200080 (English)
+49 89 92103 559 (German)
+33 1 69 35 48 48 (French)
support@freescale.com

Japan:
Freescale Semiconductor Japan Ltd.
Headquarters
ARCO Tower 15F
1-8-1, Shimo-Meguro, Meguro-ku
Tokyo 153-0064, Japan
0120 191014
+81 2666 8080
support.japan@freescale.com

Asia/Pacific:
Freescale Semiconductor Hong Kong Ltd.
Technical Information Center
2 Dai King Street
Tai Po Industrial Estate,
Tai Po, N.T., Hong Kong
+800 2666 8080
support.asia@freescale.com

For Literature Requests Only:
Freescale Semiconductor
Literature Distribution Center
P.O. Box 5405
Denver, Colorado 80217
(800) 441-2447
303-675-2140
Fax: 303-675-2150
LDCForFreescaleSemiconductor
@hibbertgroup.com

Information in this document is provided solely to enable system and software implementers to use Freescale Semiconductor products. There are no express or implied copyright licenses granted hereunder to design or fabricate any integrated circuits or integrated circuits based on the information in this document.

Freescale Semiconductor reserves the right to make changes without further notice to any products herein. Freescale Semiconductor makes no warranty, representation or guarantee regarding the suitability of its products for any particular purpose, nor does Freescale Semiconductor assume any liability arising out of the application or use of any product or circuit, and specifically disclaims any and all liability, including without limitation consequential or incidental damages. “Typical” parameters which may be provided in Freescale Semiconductor data sheets and/or specifications can and do vary in different applications and actual performance may vary over time. All operating parameters, including “Typicals” must be validated for each customer application by customer’s technical experts. Freescale Semiconductor does not convey any license under its patent rights nor the rights of others. Freescale Semiconductor products are not designed, intended, or authorized for use as components in systems intended for surgical implant into the body, or other applications intended to support or sustain life, or for any other application in which the failure of the Freescale Semiconductor product could create a situation where personal injury or death may occur. Should Buyer purchase or use Freescale Semiconductor products for any such unintended or unauthorized application, Buyer shall indemnify and hold Freescale Semiconductor and its officers, employees, subsidiaries, affiliates, and distributors harmless against all claims, costs, damages, and expenses, and reasonable attorney fees arising out of, directly or indirectly, any claim of personal injury or death associated with such unintended or unauthorized use, even if such claim alleges that Freescale Semiconductor was negligent regarding the design or manufacture of the part.

Freescale™ and the Freescale logo are trademarks of Freescale Semiconductor, Inc. The PowerPC name is a trademark of IBM Corp. and is used under license. All other product or service names are the property of their respective owners.

© Freescale Semiconductor, Inc. 2004, 2006.

MPC8280EC
Rev. 1.7
12/2006

freescale™
semiconductor