ITEM	Q'TY	PART NUMBER	PART DESCRIPTION
1	1	MPC3	Chrome Panel Mount Holder, 3mm
2	1	3XX-F	T-1 (3mm) Flanged LED
3	1	BWS24AWG-RD	24AWG Wire Lead, U.L. 1007, Red
4	1	BWS24AWG-BK	24AWG Wire Lead, U.L. 1007, Black
5	2	BST200-BK	Shrink Tubing, 0.500" Black

REV.	DESCRIPTION	DATE	APPROVED
A	Engineering Release.	07/27/07	M. C.
B	Updated 3UWC-0.6K-F with 3UWC1.035C-F	04/26/12	T. Y.
C	Updated LED offering	05/03/12	T. Y.
D	Updated Bi-Color Polarity Table	12/18/12	T. Y.

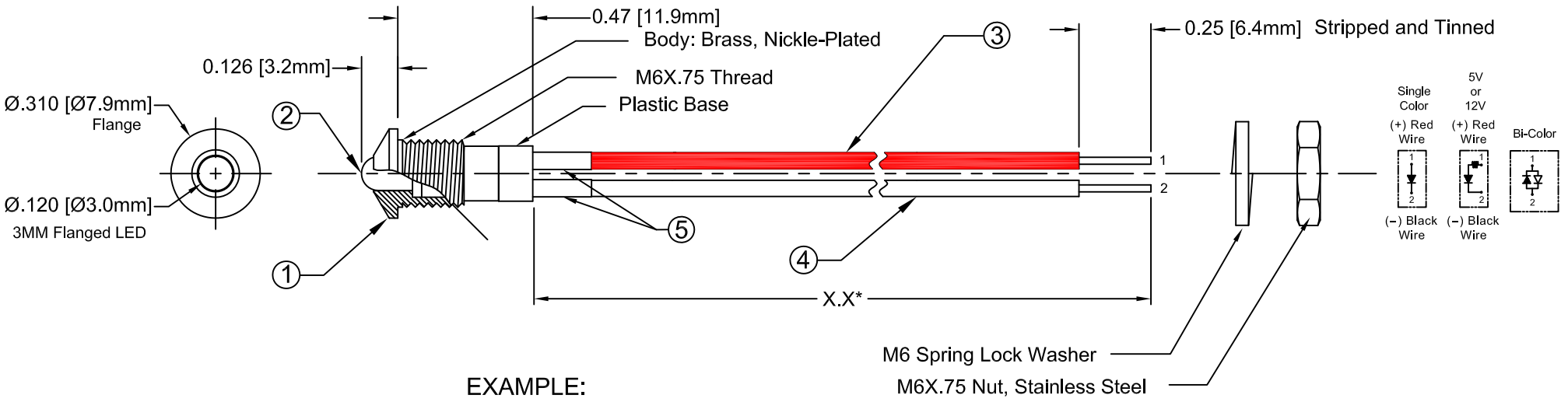

EXAMPLE:
MPC3RDW6.5*
- MPC3 — Series
- R — LED Color, Lens Appearance
- D — LED Color, Lens Appearance
- W6.5* — Wire Length in inches

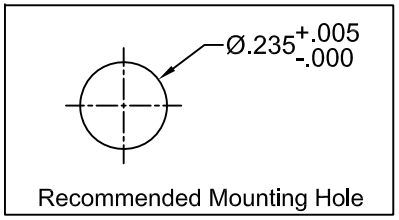

BI-COLOR POLARITY		
LED P/N	(1) Cathode	(2) Cathode
3BC-F	Green	Red
3BC-Y/G-F	Green	Yellow
3BC-R/Y-F	Yellow	Red
3BC-A/G-F	Green	Amber

ABSOLUTE MAXIMUM RATINGS (Ta = 25°C)

REVERSE VOLTAGE	5V
REVERSE CURRENT (VR=5V)	100µA
OPERATING TEMPERATURE RANGE	-40°C ~ 85°C
STORAGE TEMPERATURE	-40°C ~ 100°C
LEAD SOLDERING TEMPERATURE (1/16" FROM BODY)	260°C for 5 Seconds

STANDARD TOLERANCE (UNLESS OTHERWISE SPECIFIED)
DECIMALS: .X ± .1; .XX ± .02; .XXX ± .010
ANGULAR: X° ± 1°

BIVAR®
4 THOMAS, IRVINE, CA. 92618
TEL: (949) 951-8808 FAX: (949) 951-3974

TITLE: STD METAL PANEL MOUNT INDICATORS W/ WIRES

DESIGNED:	DATE:	PART NO:	REVISION:
Dan Beckman	07/27/07	MPC3XXWX.X	D
CHECKED: T. Yin	DATE: 07/27/07	CAGE CODE : 32559	SHEET # 1 OF 4

CAD GENERATED DOCUMENT, DO NOT MEASURE DRAWING.

REV.	DESCRIPTION	DATE	APPROVED
	SEE SHEET#1.		

LED Assy. No.	Chip			Lens Appearance	Electro-Optical Data @ 20mA				Viewing Angle 2θ½ (Deg)	LED P/N
	Material	Peak Wave Length	Emitted Color		If (mA)	Vf (V)		Iv (mcd)		
					MAX	TYP	MAX	TYP		
MPC3BWCWX.X	GaN/SiC	430	BLUE	WATER CLEAR	25	4	4.5	15	20	3BWC-F
MPC3BWDWX.X	GaN/SiC	430	BLUE	DIFFUSED	25	4	4.5	10	35	3BWD-F
MPC3BWTWX.X	GaN/SiC	430	BLUE	TINTED	25	4	4.5	15	20	3BWT-F
MPC3GCWX.X	GaP/GaP	568	GREEN	WATER CLEAR	30	2.1	2.8	40	20	3GC-F
MPC3GDWX.X	GaP/GaP	568	GREEN	DIFFUSED	30	2.1	2.8	25	35	3GD-F
MPC3GTWX.X	GaP/GaP	568	GREEN	TINTED	30	2.1	2.8	40	20	3GT-F
MPC3PGCWX.X	GaP/GaP	555	PURE GREEN	WATER CLEAR	30	2.2	2.8	10	20	3PGC-F
MPC3PGDWX.X	GaP/GaP	555	PURE GREEN	DIFFUSED	30	2.2	2.8	5	35	3PGD-F
MPC3PGTWX.X	GaP/GaP	555	PURE GREEN	TINTED	30	2.2	2.8	10	20	3PGT-F
MPC3YCWX.X	GaAsP/GaP	590	YELLOW	WATER CLEAR	30	2	2.8	40	20	3YC-F
MPC3YDWX.X	GaAsP/GaP	590	YELLOW	DIFFUSED	30	2	2.8	20	35	3YD-F
MPC3YTWX.X	GaAsP/GaP	590	YELLOW	TINTED	30	2	2.8	40	20	3YT-F
MPC3ACWX.X	GaAsP/GaP	605	AMBER	WATER CLEAR	30	2	2.8	40	20	3AC-F
MPC3ADWX.X	GaAsP/GaP	605	AMBER	DIFFUSED	30	2	2.8	25	35	3AD-F
MPC3ATWX.X	GaAsP/GaP	605	AMBER	TINTED	30	2	2.8	40	20	3AT-F
MPC3HCWX.X	GaAsP/GaP	625	HE RED	WATER CLEAR	30	2	2.8	50	20	3HC-F
MPC3HDWX.X	GaAsP/GaP	625	HE RED	DIFFUSED	30	2	2.8	30	35	3HD-F
MPC3HTWX.X	GaAsP/GaP	625	HE RED	TINTED	30	2	2.8	50	20	3HT-F
MPC3RCWX.X	GaP/GaP	700	RED	WATER CLEAR	20	2.1	2.8	2.5	35	3RC-F
MPC3RDWX.X	GaP/GaP	700	RED	DIFFUSED	20	2.1	2.8	2	20	3RD-F
MPC3RTWX.X	GaP/GaP	700	RED	TINTED	20	2.1	2.8	2.5	20	3RT-F
MPC3BCWX.X-A/G	GaAsP/GaP	605	AMBER	DIFFUSED	30	2.0	2.8	6	45	3BC-A/G-F
	GaP/GaP	568	GREEN		30	2.1	2.8	6		
MPC3BCWX.X	GaAsP/GaP	625	RED	DIFFUSED	30	2.0	2.8	6	45	3BC-F
	GaP/GaP	568	GREEN		30	2.1	2.8	6		
MPC3BCWX.X-R/Y	GaAsP/GaP	625	RED	DIFFUSED	30	2.0	2.8	6	45	3BC-R/Y-F
	GaAsP/GaP	590	YELLOW		30	2.0	2.8	4		
MPC3BCWX.X-Y/G	GaAsP/GaP	590	YELLOW	DIFFUSED	30	2.0	2.8	4	45	3BC-Y/G-F
	GaP/GaP	568	GREEN		30	2.1	2.8	6		

STANDARD TOLERANCE
(UNLESS OTHERWISE SPECIFIED)
±10% ALL VALUES ANGULAR X° ± 5°

BIVAR®
4 THOMAS, IRVINE, CA. 92618
TEL: (949) 951-8808 FAX: (949) 951-3974

TITLE: STD METAL PANEL MOUNT INDICATORS W/ WIRES

DESIGNED:	DATE:	PART NO:	REVISION:
Dan Beckman	07/27/07	MPC3XXWX.X-CC	D
CHECKED: T. Yin	DATE: 07/27/07	CAGE CODE : 32559	SHEET # 2 OF 4

CAD GENERATED DOCUMENT, DO NOT MEASURE DRAWING.

REV.	DESCRIPTION	DATE	APPROVED
	SEE SHEET#1.		

LED Assy. No.	Chip			Lens Appearance	Electro-Optical Data @ 20mA				Viewing Angle 2θ½ (Deg)	LED P/N
	Material	Peak Wave Length	Emitted Color		If (mA)	Vf (V)		Iv (mcd)		
					MAX	TYP	MAX	TYP		
MPC3UBWCWX.X	GaN/SiC	470	BLUE	WATER CLEAR	30	4	4.5	400	30	3UBWC-0.6K-F
MPC3SGCWX.X	GaP/GaP	568	GREEN	WATER CLEAR	30	2.1	2.8	50	20	3SGC-F
MPC3SGDWX.X	GaP/GaP	568	GREEN	DIFFUSED	30	2.1	2.8	30	35	3SGD-F
MPC3SGTWX.X	GaP/GaP	568	GREEN	TINTED	30	2.1	2.8	50	20	3SGT-F
MPC3SYCWX.X	GaAsP/GaP	590	YELLOW	WATER CLEAR	30	2.0	2.8	50	20	3SYC-F
MPC3SYDWX.X	GaAsP/GaP	590	YELLOW	DIFFUSED	30	2.0	2.8	30	35	3SYD-F
MPC3SYTWX.X	GaAsP/GaP	590	YELLOW	TINTED	30	2.0	2.8	50	20	3SYT-F
MPC3SACWX.X	AlGaInP	605	AMBER	WATER CLEAR	30	1.8	2.4	300	20	3SAC-F
MPC3SADWX.X	AlGaInP	605	AMBER	DIFFUSED	30	1.8	2.4	100	35	3SAD-F
MPC3SATWX.X	AlGaInP	605	AMBER	TINTED	30	1.8	2.4	300	20	3SAT-F
MPC3SRCWX.X	GaAlAs/GaAs	645	SUPER RED	WATER CLEAR	30	1.7	2.4	60	20	3SRC-F
MPC3SRDWX.X	GaAlAs/GaAs	645	SUPER RED	DIFFUSED	30	1.7	2.4	40	35	3SRD-F
MPC3SRTWX.X	GaAlAs/GaAs	645	SUPER RED	TINTED	30	1.7	2.4	60	20	3SRT-F
MPC3UGCWX.X	AlGaInP	570	GREEN	WATER CLEAR	30	2.1	2.4	200	20	3UGC-F
MPC3SUGCWX.X	AlGaInP	570	GREEN	WATER CLEAR	30	2.1	2.4	300	35	3SUGC-F
MPC3UYCWX.X	AlGaInP	590	YELLOW	WATER CLEAR	30	2.0	2.4	300	20	3UYC-F
MPC3SUYCWX.X	AlGaInP	590	YELLOW	WATER CLEAR	30	2.0	2.4	400	20	3SUYC-F
MPC3UUYCWX.X	AlGaInP	590	YELLOW	WATER CLEAR	30	2.0	2.4	600	35	3UUYC-F
MPC3UOCWX.X	AlGaInP	625	ORANGE	WATER CLEAR	30	1.8	2.4	300	20	3UOC-F
MPC3SUOCWX.X	AlGaInP	625	ORANGE	WATER CLEAR	30	1.8	2.4	400	20	3SUOC-F
MPC3URCWX.X	GaAlAs/GaAs	645	RED	WATER CLEAR	30	1.7	2.4	200	35	3URC-F
MPC3SURCWX.X	AlGaInP	640	RED	WATER CLEAR	30	1.8	2.4	200	20	3SURC-F
MPC3UWCWX.X	InGaN/Sappire	6500K	WHITE	WATER CLEAR	30	3.4	3.8	1000	35	3UWC1.030C-F

STANDARD TOLERANCE
(UNLESS OTHERWISE SPECIFIED)
±10% ALL VALUES ANGULAR X° ± 5°

BIVAR®
4 THOMAS, IRVINE, CA. 92618
TEL: (949) 951-8808 FAX: (949) 951-3974

TITLE: STD METAL PANEL MOUNT INDICATORS W/ WIRES

DESIGNED:	DATE:	PART NO:	REVISION:
Dan Beckman	07/27/07	MPC3XXWX.X	D
CHECKED: T. Yin	DATE: 07/27/07	CAGE CODE : 32559	SHEET # 3 OF 4

CAD GENERATED DOCUMENT, DO NOT MEASURE DRAWING.

REV.	DESCRIPTION	DATE	APPROVED
	SEE SHEET#1.		

LED Assy. No.	Chip			Lens Appearance	Absolute Max. Ratings			Electro-Optical Data @ 2mA			Viewing Angle 2 Θ ½ (Deg)	LED P/N
	Material	Peak Wave Length λp(nm)	Emitted Color		Pd (mW)	If (mA)	Peak If(mA)	Vf (V) TYP	Vf (V) MAX	Iv (mcd) TYP		
MPC3BWDLWX.X	GaN/siC	430	BLUE	DIFFUSED	20	7	-	3.8	4.2	2.5	35	3BWDL-F
MPC3GDLWX.X	GaP/GaP	568	GREEN	DIFFUSED	10	7	-	2.1	2.6	4.0	35	3GDL-F
MPC3PGDLWX.X	GaP/GaP	555	PURE GREEN	DIFFUSED	10	7	-	2.1	2.6	0.2	35	3PGDL-F
MPC3YDLWX.X	GaAsP/GaP	590	YELLOW	DIFFUSED	10	7	-	2.0	2.6	2.0	35	3YDL-F
MPC3ADLWX.X	GaAsP/GaP	605	AMBER	DIFFUSED	10	7	-	2.0	2.6	4.0	35	3ADL-F
MPC3HDLWX.X	GaAsP/GaP	625	HE RED	DIFFUSED	10	7	-	2.0	2.6	2.5	35	3HDL-F
MPC3RDLWX.X	GaP/GaP	700	RED	DIFFUSED	10	7	-	2.1	2.6	0.5	35	3RDL-F
MPC3SRDLWX.X	GaAlAs/GaAs	645	RED	DIFFUSED	10	7	-	2.0	-	8.0	35	3SRDL-F

Assembly P/N	Peak Wave Length λp(nm)	Emitted Color	Lens Appearance	Electro-Optical Data				Viewing Angle 2 θ½ (Deg)	LED P/N
				If (mA) MAX	Vf (V) TYP	Vf (V) MAX	Iv (mcd) TYP		
5 Volt				**Data @ 5V**					
MPC3BWD5VWX.X	BLUE	430	DIFFUSED	-	-	5	10	35	3BWD5V-F
MPC3GC5VWX.X	GREEN	568	WATER CLEAR	-	-	5	40	20	3GC5V-F
MPC3GD5VWX.X	GREEN	568	DIFFUSED	-	-	5	25	35	3GD5V-F
MPC3GT5VWX.X	GREEN	568	TINTED	-	-	5	40	20	3GT5V-F
MPC3AD5VWX.X	AMBER	605	DIFFUSED	-	-	5	25	35	3AD5V-F
MPC3HD5VWX.X	HE RED	625	DIFFUSED	-	-	5	30	35	3HD5V-F
MPC3RD5VWX.X	RED	700	DIFFUSED	-	-	5	2	35	3RD5V-F
MPC3YD5VWX.X	YELLOW	590	DIFFUSED	-	-	5	20	35	3YD5V-F
12 Volt				**Data @ 12V**					
MPC3GC12VWX.X	GREEN	568	WATER CLEAR	-	-	12	40	20	3GC12V-F
MPC3GD12VWX.X	GREEN	568	DIFFUSED	-	-	12	25	35	3GD12V-F
MPC3HC12VWX.X	HE RED	625	WATER CLEAR	-	-	12	50	20	3HC12V-F
MPC3HD12VWX.X	HE RED	625	DIFFUSED	-	-	12	30	35	3HD12V-F
MPC3RC12VWX.X	RED	700	WATER CLEAR	-	-	12	6	20	3RC12V-F
MPC3RD12VWX.X	RED	700	DIFFUSED	-	-	12	2	35	3RD12V-F
MPC3YC12VWX.X	YELLOW	590	WATER CLEAR	-	-	12	40	20	3YC12V-F
MPC3YD12VWX.X	YELLOW	590	DIFFUSED	-	-	12	25	35	3YD12V-F

STANDARD TOLERANCE
(UNLESS OTHERWISE SPECIFIED)
±10% ALL VALUES ANGULAR X° ± 5°

BIVAR®
4 THOMAS, IRVINE, CA. 92618
TEL: (949) 951-8808 FAX: (949) 951-3974

TITLE: STD METAL PANEL MOUNT INDICATORS W/ WIRES

DESIGNED:	DATE:	PART NO:	REVISION:
Dan Beckman	07/27/07	MPC3XXWX.X	D
CHECKED: T. Yin	DATE: 07/27/07	CAGE CODE : 32559	SHEET # 4 OF 4

CAD GENERATED DOCUMENT, DO NOT MEASURE DRAWING.