MPC152-832

15" TFT Medical Grade Panel Computer with Low Power Intel® Atom™ Processor D2550

Features

- 15" XGA TFT LCD display with LED backlight
- Fanless cooling system with Intel® Atom™ processor D2550 2 cores @1.86 GHz
- UL60601-1, EN60601-1, CE and FCC class B certified
- Water /dust-proof design (front bezel: IP65, full enclosure: IPX1)
- One key touch screen on/off button
- Ultra slim design: thickness 54.6 mm
- Super lightweight: 3.2 kg
- Supports optional panel mount, wall mount, VESA mount and desktop stand



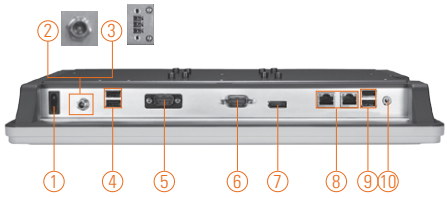

1. Power switch (ATX)
2. Screw conn. w/ AC power adapter or
3. Terminal block for DC power input
4. USB 2.0 x 2
5. Isolated COM 3 (RS-232)
6. COM 1 (RS-232/422/485)
7. DisplayPort
8. Ethernet
9. USB 2.0 x 2
10. Audio (Line-out)
11. Touch on/off button

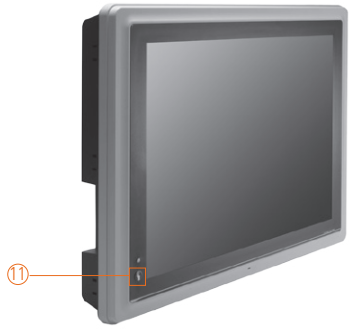

▲ Side view

AiRD | EN/UL60601-1 | Supports Intel Atom | IP65 | IPX1 | Fanless | Low Power | DualView | DDR3

Introduction

The MPC152-832 is a 15" Intel® Atom™-based fanless medical grade touch panel computer which is well-suited for applications like medical image processing and medical measuring instrument. Especially designed for the medical environment, it adopts whole system IPX1 and front IP65 waterproof design which protects the entire system from outside liquid, preventing system from crashing. In response to market demand, this medical panel computer is a cost effective solution. It supports Intel® Atom™ processor D2550 1.86 GHz.

Super slim & ultra lightweight design

The MPC152-832 is a super slim touch panel computer for space-limited environment with its thickness of 54.6 mm and weight of 3.2 kg only, which make it installed everywhere. Besides, it provides two types of power input. One is medical grade AC medical power adapter with screw type connector, and the other is DC power input (10~30VDC) with terminal block connector (option).

Built-in internal WLAN

The MPC152-832 provides a PCIe Mini Card slot and a built-in WLAN antenna for wireless network connections. By simply plugging in the wireless LAN card, customers can use the 15-inch medical computer in a wireless LAN/GPRS/ GSM/4G environments.

Certifications

This medical panel platform complies with UL60601-1, EN60601-1, CE, FCC Class B certifications to ensure medical operation safety.

Specifications

Front Bezel	IP65, NEMA 4 rugged protection, plastic front bezel	
LCD Panel	Display Type	15" XGA TFT LCD with LED backlight
	Brightness (cd/m^2)	400 nits
	Resolution	1024 x 768
	Viewing Angle (H/V)	160°/140°
Main System	CPU	Intel® Atom™ processor D2550 2 cores @1.86 GHz
	Chipset	Intel® NM10
	System Memory	1 x 204-pin DDR3 SO-DIMM max. up to 4 GB
	BIOS	AMI 8 Mbit with RPL/PXE LAN boot ROM
	Storage	1 x 2.5" SATA HDD 1 x CompactFlash™
	Watchdog Timer	255 levels, 0~255 sec.
	Onboard Graphics	Integrated in Intel® GFX

Updated February 02, 2016. * All specifications and photos are subject to change without notice.

Specifications

I/O Connector	1 x RS-232 (COM 3 w/isolated 4KV) 1 x RS-232/422/485 (COM 1) 1 x DisplayPort 1 x Audio (Line-out) 4 x USB 2.0 2 x 10/100/1000Mbps Ethernet
Expansion Interface	1 x PCIe Mini Card slot
Touch screen	Resistive type One key touch screen on/off button
Power Supply	1. AC version: Medical grade 100-240V AC-DC 60W power adapter 2. DC version: 10~30VDC with terminal block
Dimensions	387.9 mm (15.27") (W) x 54.6 mm (2.14") (D) x 307.7 mm (12.11") (H)
Packing Dimensions	510 mm (20.08") (W) x 105 mm (4.13") (D) x 385 mm (15.16") (H)
Weight(net/gross)	3.2 kg (7.05 lb)/5.1 kg (11.24 lb)
Environment	Operating temperature: 0°C ~ +40°C (+32°F ~ +104°F) Storage Temperature: 0°C ~ +40°C (+32°F ~ +104°F) Relative humidity: 20% ~ 90% @ 40 ; non-condensing Operation vibration: 2G, 5 ~ 500Hz, random for CompactFlash™
Certificate	CE, FCC class B, UL60601-1, EN60601-1

* The DC power source to be used with MPC152-832 must be galvanically isolated according to IEC60601-1 safety of medical devices!

Ordering Information

Standard	
MPC152-832-J	15" XGA fanless medical touch panel computer with Intel® Atom™ processor D2550, 5-wire resistive touch screen, AC-DC 60W medical grade power adapter (screw type connector), EMI class B, UL60601-1 and EN60601-1 certified
MPC152-832-DC	15" XGA fanless medical touch panel computer with Intel® Atom™ processor D2550, 5-wire resistive touch screen, 10~30VDC power input (terminal block connector), UL60601-1 and EN60601-1 certified

Optional
Wi-Fi + Bluetooth kit
Panel mount kit

* Specification and certifications are based on options and may vary.

Optional EOS Installation

WES7
WES

Optional OS Installation

Windows® 7
Windows® XP

Dimensions

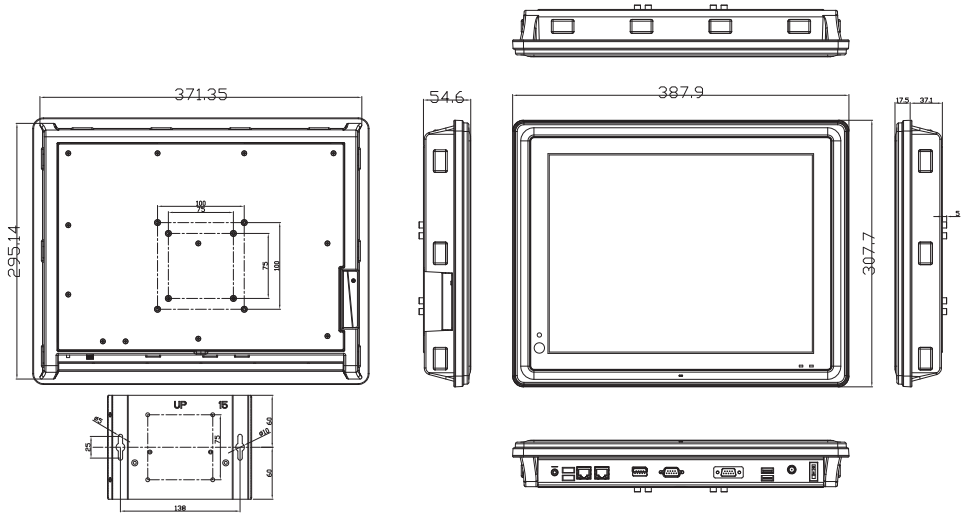

© 2016 Axiomtek Co., Ltd. All rights reserved.